Annual Report on Environmental Statistics 2017

Edited by

Ministry of the Environment

Government of Japan

Environmental Policy Bureau

■Chapter 1 Overview of Society and Economy

Domestic Basic Indices		page
1.01	Population, area, gross prefectural product and electricity consumed by prefecture	1
1.02	Chart of Japan's energy balance flow (FY2016)	5
1.03	Trends in total amount of domestic primary energy supply	6
1.04	Trends in final domestic energy consumption	7
1.05	Fuel consumption for residential and commercial industry use	8
1.06	Supply and demand of food	9
1.07	Energy consumption by manufacturing industry (by industry type)	10
1.08	Energy intensity of manufacturing (IIP basis)	13
1.09	Residential energy consumption by use	14
1.10	Residential energy consumption by energy	15
1.11	Residential energy consumption per household by use	16
1.12	Residential energy consumption per household (by use and by energy)	17
1.13	Penetration and ownership of home appliances	18
1.14	Commercial energy consumption by use	19
1.15	Commercial energy consumption by energy	20
1.16	Commercial energy consumption by business type	21
1.17	Commercial energy consumption per floor space by use	22
1.18	Commercial energy consumption per floor space by use and energy	23
1.19	Transportation energy consumption (by mode)	24
1.20	Energy intensity by mode	25
1.21	Trends in proportion of power generation by energy source	26
1.22	Trends in rate of utilization for nuclear power plants	27
1.23	Trend in CO2 emissions per unit of user-end electricity	28
1.24	New energy supply	29
1.25	Installed capacity and utilization of new energy	30

Overseas Basic Indices		page
1.26	Energy balance by country and region (production amount, consumption amount)	31
1.27	Consumption of coal, oil, natural gas and electric power	32
1.28	World new energy supply	33
1.29	Production quantity of marine products (by species)	34

■Chapter 2 Global Environment

Greenhouse Gas Emissions		page
2.01	Trends in emission amounts of greenhouse gasses in Japan	36
2.02	Trends in Carbon Dioxide Emissions by Sectors in Japan	37
2.03	Trend in Major Socioeconomic Activities and Carbon Dioxide emissions	38
2.04	Trends in carbon dioxide emissions by energy use in major countries and regions	40
2.05	Carbon dioxide emissions by source in major countries and regions	42
2.06	Atmospheric concentrations and anthropogenic emission of CO2	43
2.07	Emissions of greenhouse gasses in major countries and regions	44
2.08	Anomalies of annual average land temperature in the World and Japan	45

Ozone Layer Depletion		page
2.09	Shipping volume of CFC in Japan	46
2.10	Production and consumption volumes of HCFC in Japan	49
2.11	Changes in production volume of major CFCs in the world	50
2.12	Emissions of Ozone Depleting Substances on PRTR basis	51
2.13	Chronological changes in Background Concentration of Specified Substances in the Atmosphere in Hokkaido	52
2.14	Changes in annual average of total ozone amount over Japan	54
2.15	Changes in ozone hole area in the Antarctic	55
2.16	Recovery and Destruction of Fluorocarbons	56
2.17	Japan's contribution to the Montreal Protocol Multilateral Fund	57

Acid Precipitation		page
2.18	Trends in emissions of sulfur dioxide (SOx) by country	58
2,19	Trends in emissions of nitrogen oxide (NOx) by country	59
2.20	Acid deposition in Europe (Annual average of pH in precipitation)	60
2.21	Acid Deposition in Japan (Annual Average of pH in Precipitation)	61
2.22	Annual average pH at monitoring sites of East Asia acid deposition monitoring network (EANET)	62

Water Quality		page
2.23	Water quality in rivers	63
2.24	Water quality in lakes	64
2.25	Population accessible to sewage treatment facilities	65

Water Resources		page
2.26	Amount of water intake and fresh water resources by country	66

Ocean Contamination		page
2.27	Ocean-dumping of Waste	68

Soil Contamination		page
2.28	Consumption of fertilizer by country	69

Biodiversity		page
2.29	Changes in land-use by country	70
2.30	Threatened species in each country	71

Forest Resources		page
2.31	Areas of agricultural land by country	74
2.32	Forest area in each country	75

Environmental Issues in Developing Countries		page
2.33	Performance records of Environment-related ODA	76

■Chapter 3 Natural Environment

Land Use		page
3.01	Area of forest converted by purpose	77
3.02	Area of five categories on Basic Land Use Planning by prefecture	78
3.03	Shares of Vegetation Categories by Region	79
3.04	Shares of Vegetation Naturalness by Region	80
3.05	Changes in Vegetation Naturalness over Time	81
3.06	Areas of Forest and Grazing Land (by prefectures and type of ownership)	82
3.07	Area of forest used for public benefits by prefecture	83

Nature Conservation		page
3.08	Number of Natural Parks and Visitors	84
3.09	Annual number of visitors in each national park	85
3.10	Annual number of visitors to each quasi-national park	88
3.11	Number of Applications for Permission for Activities in National Parks (Numbers of Approvals by the Ministry of the Environment)	92
3.12	Area of Natural Parks by Region	93
3.13	Area of Natural Parks by Prefecture	94
3.14	Marine Parks located in the National Parks and the Quasi-National Parks	95
3.15	Area of Wilderness Areas, Nature Conservation Areas	98
3.16	Area of World Natural Heritages	100

Use and Protection of Hot Springs		page
3.17	Annual Survey on the Administrative Measures based on Hot Springs Law	101
3.18	Survey on the Administrative Measures based on Hot Springs Law (by Prefecture)	102
3.19	Changes in Utilization of Hot Springs	107
3.20	Utilization of Hot Springs by prefecture	109

City Parks		page
3.21	Status of city parks (by prefecture)	111

Shorelines		page
3.22	Changes in the total length of nationwide Coastline	114
3.23	Alteration of Lake Shorelines	115
3.24	Total length of the coast by prefecture	116

Wetland Conservation		page
3.25	Distribution of Extant Tidal flats (by sea area)	119
3.26	Change in Nationwide tidal flats area	120
3.27	Distribution of Extant Sea Grass Beds (by sea area)	121
3.28	Area of Hermatypical Coral by Prefecture	122
3.29	Designated Ramsar sites in Japan	123

Biodiversity		page
3.30	Threatened Wildlife Species in Japan (the species listed in the Red List of the Ministry of the Environment)	124
3.31	Number of Nationally Endangered Species of Wild fauna and flora and protection and recovery program in Japan	125
3.32	Designation of Natural Habitat Protection Area	126
3.33	Designation of Wildlife Protection Areas and Areas for Paid Game Hunting	127
3.34	Number of Hunting Licenses and Captured Wildlife by Hunting	128
3.35	The number of Invasive Alien Species and of Confirmed/Acknowledged Cases of their Mitigation based on Invasive Alien Species Act	129

Animal Protection and Management		page
3.36	Registration Status of the Animal Handling Business Operators	130
3.37	Change in the Number of Dogs and Cats Adopted, Reunited with Owners, and Put to Sleep	132

■Chapter 4 Material-Cycle

Material Flow		page
4.01	Material Flow in Japan	133
4.02	Changes in Material Flow Indicators in Japan	134

Municipal Waste		page
4.03	Waste Disposal Flow Sheet	135
4.04	Trends in total amount of waste generated	136
4.05	Changes in generation of waste per person per day	137
4.06	Waste Treatment by Prefecture	138
4.07	Development of Waste Incineration Plants	140
4.08	Development of Waste Incineration Plants by Prefecture	141
4.09	Development of Recycling Facilities	142
4.10	Development of Recycling Facilities by Prefecture	144
4.11	Development of Bulky Waste Disposal Facilities	145
4.12	Development of Bulky Waste Facilities by Prefecture	146
4.13	Changes in Total Volume of Final Disposal	147
4.14	Development of Final Disposal Sites by Prefecture	148
4.15	Changes in Annual Expenses for the Waste Management	150
4.16	Changes in Annual Expenditures for Waste Management Program	151

Industrial Waste		page
4.17	Flow of treatment for industrial waste	152
4.18	Generation of Industrial Waste by Industrial Sector	153
4.19	Generation of Industrial Waste by Type	156
4.20	Changes in Disposal/Treatment of Industrial Waste	158
4.21	Changes in the Number of Permissions for the Industrial Waste and the Remaining Periods of the Capacity of Final Disposal Sites	159
4.22	Number of illegal-dumping cases of Industrial Waste and volume dumped by Prefecture (Newly-reported cases)	160
4.23	Survey on Environmental impacts by Illegal dumping and measures by prefectures (the unsolved cases)	163
4.24	Offenders of illegal dumping	164
4.25	Number of Unsolved Cases of Illegal Dumping and Remaining Amount	165
4.26	Number of the Unsolved Cases of Illegal Dumping and Remaining Amount by Prefecture	166
4.27	Improper Disposal of Sulfate Pitch	167

Wide-Area Movement		page
4.28	Wide-area movement of municipal waste	168
4.29	Wide-area movement of industrial waste	169

Package Recycling		page
4.30	Percentage of Containers and Packaging in Household Waste	170
4.31	Production and disposal of plastics	171
4.32	Changes in sales amounts of aluminum cans and recycling ratio	172
4.33	Changes in consumption and recycling rate of steel cans	173
4.34	Change in recovery rate of cardboard	174
4.35	Changes in production volumes and recovery ratio of PET bottles	175
4.36	Utilization of products from recycled PET bottles	176
4.37	Changes in sales volume and collection rate of household cartons	177
4.38	Achievement on Sorted Collection and Recycling based on the Containers and Packaging Recycling Act	178
4.39	Changes in production volume and recycling rate of foamed polystyrene	179

Home Appliances Recycling		page
4.40	Implementation of Recycling of Specified Home Appliances	180

Construction Recycling		
4.41	Volumes of construction waste by type	182
4.42	Recycling of construction waste by item	183

Food Recycling		
4.43	Generation and treatment of food waste	184

Automobile Recycling		page
4.44	Collection of used cars (number of cases reported)	185
4.45	Rate of recycling of Shredder dust (ASR) and the like by automobile manufacturers	186

Effective Resource Utilization		page
4.46	Voluntary collection and resource regeneration of PC and small rechargeable batteries	187

■Chapter 5 Aquatic Environment

Water Quality		page
5.01	Number of Specified Sites in accordance with the Water Pollution Control Act	188
5.02	Number of specified Facilities by prefecture in accordance with Water Pollution Control Act	189
5.03	Results of the comprehensive survey of release of water pollution substances	190
5.04	Rate of compliance with environmental quality on health issues (non-achievement rate)	191
5.05	Rate of compliance for environmental standards (BOD or COD)	192
5.06	Water quality of enclosed sea area (annual average of COD)	193
5.07	Changes in Water quality in the specified lakes (COD)	194
5.08	Achievement rate of Environmental Quality Standards for total nitrogen and total phosphorus in marine water	195
5.09	Achievement of Environment Standards for Total Nitrogen and Total Phosphorus in Lakes	196
5.10	Generation Loads and Reduction Targets for 3 Sea Areas with Area-wide Total Pollutant Controls by Source	197
5.11	Number of occurrences of Red Tides in Seto Inland Sea	198
5.12	Licensed landfill area of Seto inland sea	199
5.13	Amount of sea gravel extracted in coastal prefectures in Seto Inland Sea	200

Groundwater Contamination		page
5.14	Groundwater contamination - Yearly number of confirmed cases where contamination level exceeds the standards	201
5.15	Itemized breakdown of groundwater contamination cases	202

Groundwater Quality		page
5.16	Results of groundwater quality survey	203

Ocean Contamination		page
5.17	Changes in number of confirmed marine pollution cases by sea area	209
5.18	Changes in number of cases of referral by violations against marine environmental laws	210

Waste Water Treatment		page
5.19	Night soil treatment flow sheet	211
5.20	Changes in population using flush toilets and treatment volume of night soil	212
5.21	Current situations of night soil treatment facilities by prefectures	214
5.22	Trends in breakdown of nationwide night soil treatment facilities by type (start-of-construction-basis)	216
5.23	Changes in number of installed septic tanks (Nationwide)	217
5.24	Night soil treatment facilities (established by municipalities and administration associations) by prefecture	218
5.25	Diffusion of septic tanks and community plants by prefecture	219
5.26	Population served by waste-water treatment system by year	220
5.27	Changes in expenses for night soil treatment projects	221

Soil Contamination		page
5.28	Production and Shipment of Major Agrochemicals	222
5.29	Production of chemical fertilizer	223
5.30	Changes in numbers of soil pollution incidents where Environmental Quality Standards (EQS) were exceeded	224
5.31	Number of soil contamination investigations and countermeasures taken by prefecture	225
5.32	Progress of agricultural land soil pollution countermeasures	226
5.33	Designated-contamination areas and areas with projects for countermeasres completed in each year	227

Ground Subsidence		page
5.34	Use of ground water in Japan	228
5.35	Changes in nationwide ground subsidence	229

■Chapter 6 Atmospheric Environment

Fixed Sources		page
6.01	Changes in number of facilities emitting soot and smoke	230
6.02	Number of facilities emitting soot and smoke by prefecture	231
6.03	Changes in of particulate-discharging facilities (Ordinary particulate/specified particulates)	232
6.04	Prefectural number of facilities discharging ordinary particulates	233
6.05	Air pollutant emissions (from Stationary sources)	234
6.06	Sulfur oxide emissions (breakdown by type of facility)	235
6.07	Nitrogen oxide emissions (breakdown by type of facility)	236
6.08	Soot and dust emissions (breakdown by type of facility)	237

Mobile Sources		page
6.09	Changes in car ownership	238
6.10	Total automobile transportation volume and car ownership by prefecture	245
6.11	Trends in freight transportation	246
6.12	Changes in volume of passenger transportation	248
6.13	Changes in transport share by mode	250
6.14	Development and coverage rate of national highways by prefecture	252
6.15	Traffic Volume of National Expressways, Urban Expressways and Common Roadways	255
6.16	Changes in Kilometers Traveling (one million kilometers)	257

Low Emission Vehicles		page
6.17	Changes in number of the next-generation vehicles	258
6.18	Changes in number of fueling facilities for next-generation vehicles	259

Sulfur-Oxides		page
6,19	Trends in annual average concentration of Sulfur Dioxide (Ambient air pollution monitoring stations/Roadside air pollution monitoring stations)	260
6.20	Achievement of environmental quality standards for concentration of Sulfur Dioxide (Ambient air pollution monitoring stations/roadside air pollution monitoring stations)	261

Nitrogen-Oxides		
6.21	Trends in annual average concentration of Nitrogen Dioxide (NO2) and Nitrogen Monoxide (NO) (Ambient air pollution monitoring stations / Roadside air pollution monitoring stations)	262
6.22	Achievement situation of environmental quality standards for Nitrogen Dioxide (Ambient air pollution monitoring stations / Roadside traffic environment monitoring stations)	263
6.23	Achievement situation of environmental quality standards for Nitrogen Dioxide by prefecture (Ambient Air Pollution Monitoring Stations)	264
6.24	Achievement situation of environmental standards for Nitrogen Dioxide (NO2) by prefecture (Roadside air pollution monitoring stations)	265

Suspended Particulate Matters		page
6.25	Trends in annual average concentration of Suspended Particulate Matters (Ambient Air Pollution Monitoring Stations/Roadside Air Pollution Monitoring Stations)	266
6.26	Achievement situation of environmental quality standards for Suspended Particulate Matters (Ambient air pollution monitoring stations / Roadside air pollution monitoring stations)	267
6.27	Trends in annual average concentration of Particulate Matters	268
6.28	Achievement situation of environmental quality standards for Suspended Particulate Matters by prefecture (Ambient Air Pollution Monitoring Stations)	269
6,29	Achievement situation of environmental quality standards for Suspended Particulate Matters by prefecture (Roadside Air Pollution Monitoring Stations)	270

Carbon-Monoxide		page
6.30	Trends in annual average concentration of Carbon Monoxide (Ambient Air Pollution Monitoring Stations/Roadside Air Pollution Monitoring Stations)	271

Non-Methane Hydrocarbon		page
6.31	Trends in annual average concentration of Non-Methane Hydrocarbon (Ambient Air Pollution Monitoring Stations / Roadside Air Pollution Monitoring Stations)	272

Hazardous Air Pollutants		page
6.32	Changes in nationwide average concentration of hazardous air pollutants to which environmental standards are applied	273
6.33	Achievement of the Environmental Quality Standards for designated Hazardous Air Pollutants	274
6.34	Changes in nationwide averages of concentration of hazardous air pollutants for which guideline values are set	275
6.35	Changes in nationwide averages of concentration of hazardous air pollutants for which guidelines are set	276

Photochemical Oxidant		page
6.36	Trends in number of days when photochemical oxidant alerts and warnings were issued and reported damages	277
6.37	Trends in number of days when photochemical oxidant alerts and warnings were issued by prefecture	278

Noises/Vibrations/Odors		page
6.38	Changes in the number of specified facilities under the Noise Regulation Law	280
6,39	Changes in numbers of specified facilities under Vibration Regulation Law	281
6.40	Changes in number of specified facilities under Noise Regulation Law by prefecture	282
6.41	Changes in number of specified facilities under Vibration Regulation Law by prefecture	283
6.42	Trends in numbers of complaints on noise, vibration and odor	284
6.43	Achievement of environmental standards for noises caused by automobiles, airplanes and Shinkansen	285

■Chapter 7 Chemical Substances

Dioxins		page
7.01	Dioxins emission inventory	286
7.02	Result of environmental survey on dioxins	288
7.03	Chronological changes in daily intake of dioxins per person in Japan	289
7.04	Chronological changes in daily intake of dioxins originated from total diet samples	290
7.05	Notifications of specified facilities based on the Law concerning Special Measures against Dioxins	291
7.06	Specified facilities subject to Gas Emission Standards, based on the Law Concerning Special Measures against Dioxins (by type of notification)	293
7.07	Notifications from facilities subject to Effluent Emission Standards, based on the Act on Special Measures against Dioxins (by contents of notification)	294

Chemical Substances		page
7.08	Number of notifications for new chemical compounds based on Act on the Evaluation of Chemical Substances and Regulation of their Manufacture, etc.	295
7.09	Results of the Initial Environmental Survey	296
7.10	Results of the Detailed Environmental Survey	297
7.11	Results of Environmental Monitoring	298
7.12	Amount of releases and transfers based on PRTR by industry	301
7.13	Amounts of releases and transfers based on PRTR by prefecture	302
7.14	Reported releases and estimated releases by prefecture	303
7.15	PRTR top ten substances of reported releases and transfers	304
7.16	PRTR top ten substances of reported releases and estimated releases	305

■Chapter 8 Overview of Environmental Measures

Public Administration		page
8.01	① Budget for competitive funding on environmental research and development of environmental technology	306
8.01	② Number of employees in environmental divisions of local governments by prefecture	307
8.02	Trainees at the National Environmental Research and Training Institute, Ministry of the Environment	308
8.03	Changes in number of arrests for environmental crimes grouped by law	309
8.04	Number of arrests for violation of Waste Disposal Act by type	310
8.05	Changes in numbers of offenders normally accepted / processed	311
8.06	Regions under the Regional Environmental Pollution Control Programs	312
8.07	The Costs relating to the Pollution Prevention Projects, and Additional Subsidies	313
8.08	Existing number of Patients by Region, subject to Law Concerning Pollution-Related Health Damage Compensation and other Measures	314
8.09	Changes in Existing number of Patients by Region, subject to the Pollution Damage Compensation Act	315
8.10	① Number of certified persons by Act on Compensation, etc. for pollution related health damage (Status of application process for Minamata disease certification)	317
8.10	② Judgment on relief measures based on the Law Concerning Special Measures for Compensation of Minamata Disease	318
8.11	Acceptance and approval applications based on the Act on Asbestos Health Damage Relief	319
8.12	Implementation Rate of Green Procurement in Local Governments and Enterprises	320
8.13	Enforcement of performed environmental impact assessment under Environmental Impact Assessment Law	321
8.14	The number of cases that completed environmental impact assessment procedures under Environmental Impact Assessment Law (as of the end of FY2014)	322
8.15	Status of formulating basic ordinances of Environmental Policy	323
8.16	Status of formulating basic plans of Environmental Policies	324
8.17	Status of environmental policies local governments are focusing on	325

Enterprises		page
8.18	Business confidence in Environmental business in Japan	326
8,19	Top 5 Environmental business that are expected to grow (total of all enterprise scale)	327
8.20	Business outlook (Diffusion Index)	328
8.21	Environmental business outlook (by type of environmental business)	329
8.22	Initiatives toward environmental management (Listed companies)	330
8.23	Companies that disclose environmental information	331
8.24	Status of compiling and disclosing of environmental reports	332
8.25	Conditions of introduction of environmental accounting	333
8.26	Changes in results of National examinations for Pollution Control Manager and Others	334

Citizens/NGOs		page
8.27	Number of Environmental NGOs and the like	335
8.28	Funding from Japan Fund for Global Environment	336

1.01 Population, area, gross prefectural product and electricity consumed by prefecture (1)

Prefecture	Population					Total land area 2016 (km^2)	Forest area (As of Feb.1, 2016) (Thousand ha)
	2000	2005	2010	2015	2016		
Nationwide	126,925,843	127,767,994	128,057,352	127,110,047	127,094,745	377,971.57	24,433
Hokkaido	5,683,062	5,627,737	5,506,419	5,383,579	5,381,733	83,423.82	5,319
Aomori	1,475,728	1,436,657	1,373,339	1,308,649	1,308,265	9,645.56	616
Iwate	1,416,180	1,385,041	1,330,147	1,279,814	1,279,594	15,275.01	1,144
Miyagi	2,365,320	2,360,218	2,348,165	2,334,215	2,333,899	* 7,282.22	407
Akita	1,189,279	1,145,501	1,085,997	1,022,839	1,023,119	11,637.52	820
Yamagata	1,244,147	1,216,181	1,168,924	1,122,957	1,123,891	* 9,323.15	641
Fukushima	2,126,935	2,091,319	2,029,064	1,913,606	1,914,039	13,783.74	937
Ibaraki	2,985,676	2,975,167	2,969,770	2,917,857	2,916,976	6,097.12	189
Tochigi	2,004,817	2,016,631	2,007,683	1,974,671	1,974,255	6,408.09	341
Gunma	2,024,852	2,024,135	2,008,068	1,973,476	1,973,115	6,362.28	406
Saitama	6,938,006	7,054,243	7,194,556	7,261,271	7,266,534	* 3,797.75	121
Chiba	5,926,285	6,056,462	6,216,289	6,224,027	6,222,666	* 5,157.64	157
Tokyo	12,064,101	12,576,601	13,159,388	13,513,734	13,515,271	* 2,191.00	78
Kanagawa	8,489,974	8,791,597	9,048,331	9,127,323	9,126,214	2,415.92	94
Niigata	2,475,733	2,431,459	2,374,450	2,305,098	2,304,264	* 12,584.18	790
Toyama	1,120,851	1,111,729	1,093,247	1,066,883	1,066,328	* 4,247.61	240
Ishikawa	1,180,977	1,174,026	1,169,788	1,154,343	1,154,008	4,186.09	276
Fukui	828,944	821,592	806,314	787,099	786,740	4,190.49	310
Yamanashi	888,172	884,515	863,075	835,165	834,930	* 4,465.27	347
Nagano	2,215,168	2,196,114	2,152,449	2,099,759	2,098,804	* 13,561.56	1,023
Gifu	2,107,700	2,107,226	2,080,773	2,032,533	2,031,903	* 10,621.29	841
Shizuoka	3,767,393	3,792,377	3,765,007	3,701,181	3,700,305	* 7,777.43	492
Aichi	7,043,300	7,254,704	7,410,719	7,484,094	7,483,128	* 5,172.90	218
Mie	1,857,339	1,866,963	1,854,724	1,815,827	1,815,865	* 5,774.41	372
Shiga	1,342,832	1,380,361	1,410,777	1,413,184	1,412,916	* 4,017.38	203
Kyoto	2,644,391	2,647,660	2,636,092	2,610,140	2,610,353	4,612.19	342
Osaka	8,805,081	8,817,166	8,865,245	8,838,908	8,839,469	1,905.14	57
Hyogo	5,550,574	5,590,601	5,588,133	5,536,989	5,534,800	8,400.93	561
Nara	1,442,795	1,421,310	1,400,728	1,365,008	1,364,316	3,690.94	284
Wakayama	1,069,912	1,035,969	1,002,198	963,850	963,579	4,724.71	362
Tottori	613,289	607,012	588,667	573,648	573,441	3,507.13	257
Shimane	761,503	742,223	717,397	694,188	694,352	6,708.24	520
Okayama	1,950,828	1,957,264	1,945,276	1,922,181	1,921,525	* 7,114.47	484
Hiroshima	2,878,915	2,876,642	2,860,750	2,844,963	2,843,990	8,479.47	610
Yamaguchi	1,527,964	1,492,606	1,451,338	1,405,007	1,404,729	6,112.34	436
Tokushima	824,108	809,950	785,491	756,063	755,733	4,146.79	312
Kagawa	1,022,890	1,012,400	995,842	976,756	976,263	* 1,876.73	87
Ehime	1,493,092	1,467,815	1,431,493	1,385,840	1,385,262	5,676.19	400
Kochi	813,949	796,292	764,456	728,461	728,276	7,103.93	592
Fukuoka	5,015,699	5,049,908	5,071,968	5,102,871	5,101,556	* 4,986.40	222
Saga	876,654	866,369	849,788	833,245	832,832	2,440.68	111
Nagasaki	1,516,523	1,478,632	1,426,779	1,377,780	1,377,187	4,132.20	241
Kumamoto	1,859,344	1,842,233	1,817,426	1,786,969	1,786,170	* 7,409.44	448
Oita	1,221,140	1,209,571	1,196,529	1,166,729	1,166,338	* 6,340.74	448
Miyazaki	1,170,007	1,153,042	1,135,233	1,104,377	1,104,069	* 7,735.31	587
Kagoshima	1,786,194	1,753,179	1,706,242	1,648,752	1,648,177	* 9,186.99	585
Okinawa	1,318,220	1,361,594	1,392,818	1,434,138	1,433,566	2,281.14	105

Note: When a prefecture shares an area of which boundaries are not yet fixed with other prefecture(s), that prefecture is indicated with *, and the figure for it is for reference purpose.

Source: Population: Compiled using data in "Population Census" and "Population Estimates" by Population Census Division, Statistical Survey Department, Statistics Bureau, Ministry of Internal Affairs and Communications
As for 2010, compiled using data in "Population Census Report 2010 Population Basic Statistics (http://www.stat.go.jp/data/kokusei/2010/)
Also, for 2015, compiled using data from "2015 Population Census of Japan -- Results of Preliminary Counts of the Population and Households." (http://www.stat.go.jp/data/kokusei/2015/kekka.htm)
As for 2016, compiled using data in "Population Census Report 2016 Population Basic Statistics (http://www.stat.go.jp/data/kokusei/2015/kekka.htm)

Total land area: Compiled from "Municipalities Area Statistics of Japan, Oct 1st 2016" Ministry of Land, Infrastructure, Transport and Tourism, Geospatial Information Authority of Japan, WEBSITE/GIS Information of the territory (http://www.gsi.go.jp/KOKUJYOHO/MENCHO201610-index.html)

Forrest area: Compiled from "World Census of Agriculture Forestry 2016" (As of Mar. 25, 2016) (http://www.maff.go.jp/j/tokei/census/afc/2015/kekka_gaisuuti.html)

1.01 Population, area, gross prefectural product and electricity consumed by prefecture (2)

Prefecture	Land use						
	Area of private land FY2015 (km^2)	Building lot	Paddy fields	Field	Forest and mountains	Natural park area (March 31, 2017) (ha)	City park area (The end of March , 2016) (ha)
Nationwide	162,364	16,933	26,054	24,043	79,786	5,565,967	98,140
Hokkaido	27,333	1,042	2,364	8,570	10,911	867,540	11,350
Aomori	3,952	296	867	719	1,537	114,187	2,021
Iwate	7,767	319	972	661	5,190	72,061	1,433
Miyagi	3,689	402	1,120	314	1,658	171,199	2,334
Akita	4,341	252	1,310	232	1,942	123,801	1,555
Yamagata	3,530	253	1,000	338	1,642	155,509	1,846
Fukushima	5,632	413	1,013	711	3,011	179,096	2,232
Ibaraki	4,169	687	925	996	1,206	90,896	2,677
Tochigi	3,177	438	967	355	1,112	133,443	2,740
Gunma	2,454	422	262	588	910	88,864	2,556
Saitama	2,265	684	398	491	479	124,582	4,321
Chiba	3,515	739	837	611	921	28,537	3,177
Tokyo	1,035	574	3	93	297	79,889	3,077
Kanagawa	1,247	596	47	189	283	55,138	2,198
Niigata	4,941	463	1,579	345	2,190	316,891	2,172
Toyama	1,361	239	596	59	375	125,554	1,610
Ishikawa	1,603	191	401	145	765	52,564	1,511
Fukui	1,526	161	386	51	860	61,912	1,177
Yamanashi	1,318	171	106	265	650	121,153	786
Nagano	4,698	474	644	686	2,266	278,548	2,513
Gifu	4,509	361	450	184	3,238	195,093	1,945
Shizuoka	4,091	558	280	601	2,279	84,041	2,020
Aichi	2,642	847	474	391	699	88,881	4,101
Mie	2,737	345	498	210	1,493	201,896	1,660
Shiga	1,572	227	501	56	685	149,957	1,252
Kyoto	1,540	221	264	93	869	94,589	1,256
Osaka	885	515	110	40	146	20,039	2,975
Hyogo	3,940	572	707	123	2,275	166,015	4,175
Nara	1,377	152	187	80	878	63,328	1,730
Wakayama	2,315	152	143	249	1,713	49,551	695
Tottori	1,354	107	252	152	678	49,061	650
Shimane	3,337	137	369	157	2,524	40,496	1,057
Okayama	4,132	354	615	254	2,682	80,664	1,541
Hiroshima	4,192	361	506	254	2,857	37,857	2,041
Yamaguchi	3,418	273	464	164	2,329	42,971	1,873
Tokushima	1,742	132	214	172	1,185	38,706	537
Kagawa	1,177	181	273	129	537	20,534	1,562
Ehime	3,233	228	279	456	2,183	41,121	1,499
Kochi	3,194	102	250	143	2,623	47,504	689
Fukuoka	2,774	632	698	279	897	88,101	2,121
Saga	1,583	161	447	221	635	26,884	818
Nagasaki	2,044	201	273	444	928	74,091	1,409
Kumamoto	3,801	330	703	582	1,856	155,636	733
Oita	2,749	214	445	270	1,472	174,391	1,201
Miyazaki	2,558	244	381	389	1,337	91,919	1,971
Kagoshima	4,875	369	459	1,077	2,502	123,449	1,882
Okinawa	1,041	141	13	456	80	77,828	1,465

Source: Area of private land:
Ministry of Internal Affairs and Communications WEBSITE/ Statistic on local taxes
(http://www.soumu.go.jp/main_sosiki/jichi_zeisei/czaisei/czaisei_seido/ichiran08.html)
Compiled using data from "Outline (land) of the record prices of fixed assets FY2015 (tentative translation)"

Natural parks' area:
National Park Division WEBSITE/Nature conservation data
Nature Conservation Bureau, Ministry of the Environment
Compiled using data from "Review of Natural Parks' Area by prefecture"
(http://www.env.go.jp/park/doc/data)

Urban parks' area:
Ministry of Land, Infrastructure, Transport and Tourism
"A table of improvement status of urban parks"
(http://www.mlit.go.jp/crd/park/joho/database/t_kokuen/index.html)

1.01 Population, area, gross prefectural product and electricity consumed by prefecture (3)

Prefecture	Cultivated land area (2016) 1)							Cultivated rate (%) 3)	Paddy field rate (%) 4)
	Total of Paddy fields and Upland filed (ha)	Field proper 2)	Paddy field	Field	Ordinary field	Land under permanent crops	Short-time Meadow		
Nationwide	4,471,000	4,292,000	2,432,000	2,039,000	1,149,000	287,100	603,400	12.0	54.4
Hokkaido	1,146,000	1,129,000	222,600	923,600	415,800	2,930	504,800	14.6	19.4
Aomori	152,300	148,100	80,700	71,600	34,500	22,700	14,500	15.8	53.0
Iwate	150,800	142,800	94,500	56,300	25,100	3,640	27,600	9.9	62.7
Miyagi	128,500	124,000	105,700	22,900	15,700	1,320	5,810	17.6	82.3
Akita	149,000	143,500	130,100	18,800	12,000	2,430	4,430	12.8	87.3
Yamagata	119,400	114,400	94,300	25,100	12,400	10,500	2,250	12.8	79.0
Fukushima	143,200	137,400	100,400	42,800	30,500	6,820	5,480	10.4	70.1
Ibaraki	169,200	166,800	98,000	71,200	64,000	6,840	364	27.8	57.9
Tochigi	124,200	120,900	96,900	27,200	22,400	2,250	2,570	19.4	78.0
Gunma	70,900	68,400	26,800	44,100	39,300	3,300	1,500	11.1	37.8
Saitama	75,800	74,600	42,000	33,800	30,600	3,090	68	20.0	55.4
Chiba	126,300	122,700	74,300	52,000	48,100	3,410	498	24.5	58.8
Tokyo	7,000	6,900	269	6,730	5,060	1,610	62	3.2	3.8
Kanagawa	19,400	18,900	3,790	15,700	12,000	3,680	-	8.0	19.5
Niigata	171,300	162,100	151,900	19,400	16,300	2,310	814	13.6	88.7
Toyama	58,700	56,600	56,100	2,540	1,560	735	246	13.8	95.6
Ishikawa	41,800	40,600	34,800	6,980	5,180	1,300	504	10.0	83.3
Fukui	40,500	39,500	36,700	3,760	2,720	783	263	9.7	90.6
Yamanashi	24,000	23,200	7,980	16,000	4,890	10,300	857	5.4	33.3
Nagano	108,000	98,500	53,500	54,500	35,900	15,400	3,300	8.0	49.5
Gifu	56,700	53,300	43,400	13,200	8,820	3,250	1,160	5.3	76.5
Shizuoka	67,100	64,700	22,500	44,600	15,800	27,700	1,150	8.6	33.5
Aichi	76,300	72,700	43,300	33,000	26,900	5,720	383	14.8	56.7
Mie	59,900	56,900	45,200	14,700	8,580	6,050	26	10.4	75.5
Shiga	52,400	50,100	48,300	4,090	2,980	1,040	66	13.0	92.2
Kyoto	30,800	28,900	24,000	6,740	3,640	3,030	68	6.7	77.9
Osaka	13,100	12,500	9,320	3,760	1,740	2,020	-	6.9	71.1
Hyogo	74,700	68,400	68,200	6,470	4,500	1,650	324	8.9	91.3
Nara	21,400	19,800	15,200	6,190	2,530	3,630	37	5.8	71.0
Wakayama	33,300	31,700	9,740	23,600	2,410	21,100	32	7.0	29.2
Tottori	34,700	31,900	23,600	11,100	8,570	1,660	869	9.9	68.0
Shimane	37,200	34,000	30,000	7,220	5,270	1,430	526	5.5	80.6
Okayama	65,900	59,900	51,600	14,400	9,990	3,700	678	9.3	78.3
Hiroshima	55,600	50,400	41,400	14,200	7,640	5,750	848	6.6	74.5
Yamaguchi	48,100	43,500	39,300	8,700	5,360	3,010	334	7.9	81.7
Tokushima	29,500	28,700	19,900	9,630	5,600	3,920	103	7.1	67.5
Kagawa	30,800	28,600	25,600	5,210	2,210	2,980	20	16.4	83.1
Ehime	49,900	46,800	23,000	26,900	6,170	20,500	196	8.8	46.1
Kochi	27,800	26,300	21,000	6,830	2,910	3,720	205	3.9	75.5
Fukuoka	83,900	80,000	66,500	17,400	8,130	9,090	223	16.8	79.3
Saga	52,600	50,000	42,800	9,820	4,240	5,530	51	21.6	81.4
Nagasaki	48,000	44,300	22,000	26,000	19,600	6,120	300	11.6	45.8
Kumamoto	112,000	104,000	67,700	44,200	22,600	14,800	6,810	15.1	60.4
Oita	56,100	52,000	40,000	16,100	8,820	4,530	2,740	8.8	71.3
Miyazaki	67,600	64,200	36,700	30,900	25,200	4,510	1,150	8.7	54.3
Kagoshima	120,400	113,100	38,600	81,800	65,000	13,600	3,230	13.1	32.1
Okinawa	38,200	37,000	838	37,400	29,500	1,940	5,910	16.7	2.2

Notes:
1) Cultivated land : Land area intended for cultivation and including attached dyke.
2) Land proper is used to grow crops and attached dyke is excluded.
3) Cultivated rate: Percentage (%) of cultivated land area (paddy field area + upland field) to total land area.
Total land area is by Geospatial Information Authority of Japan.
4) Paddy field rate: Percentage of paddy field in cultivated land area (paddy field area + upland field).

Source: Compiled using data from “Arable land and cropping area statistics” (published on February 13, 2017) by Ministry of Agriculture, Forestry and Fisheries (http://www.e-stat.go.jp/SG1/estat/List.do?lid=000001118102)

1.01 Population, area, gross prefectural product and electricity consumed by prefecture (4)

Prefecture	Gross Prefectural Product (Nominal) (Unit: million yen)							Quantity of electricity used (Unit: million kWh) 1) 2)			
	FY 2010	FY2011	FY 2014	Primary industries	Secondary industries	Tertiary industries	Taxes and duties on import goods	FY 2012	FY 2013	FY 2014	FY 2015
Nationwide	495,637,724	497,411,060	514,296,287	5,140,846	124,818,047	380,239,653	7,902,269	286,220	284,341	273,103	266,850
Hokkaido	18,428,392	18,263,055	18,484,615	749,251	3,125,835	14,607,114	137,400	11,818	11,595	11,237	11,070
Aomori	4,474,760	4,404,529	4,427,910	170,968	974,239	3,296,163	21,500	2,911	2,867	2,768	2,720
Iwate	4,096,965	4,179,680	4,647,038	143,183	1,323,061	3,128,667	82,654	2,889	2,876	2,819	2,769
Miyagi	8,045,272	7,632,961	8,895,851	96,097	2,353,208	6,424,260	87,045	5,006	5,000	4,921	4,819
Akita	3,526,125	3,463,505	3,458,566	96,233	699,419	2,661,944	19,337	2,346	2,305	2,227	2,177
Yamagata	3,739,070	3,650,352	3,754,564	129,104	964,945	2,623,908	66,881	2,573	2,518	2,470	2,385
Fukushima	7,126,334	6,432,386	7,399,862	98,828	2,573,211	4,664,840	131,980	4,187	4,145	4,106	4,017
Ibaraki	11,188,477	11,462,562	11,612,394	220,617	4,159,398	7,124,223	206,944	6,285	6,221	6,021	5,974
Tochigi	7,807,794	7,813,595	8,182,902	116,790	3,247,843	4,754,216	144,820	4,385	4,337	4,202	4,158
Gunma	7,427,842	7,644,016	8,005,480	105,575	3,231,203	4,581,000	142,430	4,499	4,438	4,278	4,236
Saitama	20,108,381	20,370,029	20,914,429	115,781	5,180,210	15,379,791	371,928	14,675	14,576	13,971	13,751
Chiba	19,005,963	18,799,527	20,044,937	217,804	4,326,548	15,301,399	356,996	12,571	12,457	11,917	11,776
Tokyo	91,139,263	92,387,777	94,902,086	48,797	10,715,916	84,245,021	445,427	29,984	29,784	28,509	28,097
Kanagawa	29,757,052	30,422,165	30,322,048	57,487	6,424,944	23,521,405	539,727	18,175	18,055	17,263	16,974
Niigata	8,606,775	8,712,110	8,699,072	160,731	2,282,390	6,170,013	154,937	5,242	5,103	4,955	4,819
Toyama	4,370,400	4,463,522	4,452,554	36,713	1,527,620	2,846,565	79,346	3,076	3,051	2,997	2,918
Ishikawa	4,264,966	4,217,520	4,588,046	37,648	1,246,834	3,257,084	81,696	3,322	3,298	3,237	3,159
Fukui	3,302,825	3,235,861	3,129,992	26,845	913,405	2,158,503	54,828	2,354	2,334	2,291	2,217
Yamanashi	3,123,259	3,143,441	3,118,690	52,370	994,341	2,042,716	55,574	1,982	1,986	1,915	1,881
Nagano	8,024,077	7,950,268	7,886,952	142,302	2,427,464	5,232,363	140,349	5,085	5,009	4,884	4,710
Gifu	7,093,400	7,123,625	7,208,829	68,275	2,214,279	4,848,937	128,285	4,681	4,633	4,454	4,309
Shizuoka	15,765,640	15,564,207	15,442,514	151,504	6,172,341	8,952,827	274,806	8,189	8,134	7,853	7,690
Aichi	31,642,329	31,881,502	35,990,293	156,403	13,723,856	21,714,532	694,607	16,117	16,062	15,322	14,831
Mie	7,368,128	7,091,928	7,656,376	83,587	3,084,285	4,433,429	135,452	4,270	4,265	4,074	3,955
Shiga	6,013,854	5,750,090	5,845,873	37,944	2,338,485	3,406,302	104,023	3,439	3,401	3,274	3,144
Kyoto	9,372,569	9,845,602	10,053,754	39,738	2,655,583	7,247,418	178,855	6,345	6,255	5,947	5,703
Osaka	36,384,314	36,600,004	37,933,987	36,287	6,916,578	30,200,723	1,158,530	20,039	19,771	18,656	17,918
Hyogo	18,346,170	18,313,629	19,788,071	97,368	5,374,073	14,131,581	352,626	12,957	12,746	12,095	11,626
Nara	3,551,806	3,500,992	3,540,714	22,573	743,728	2,731,749	60,460	3,231	3,197	3,037	2,919
Wakayama	3,503,380	3,541,483	3,579,029	63,092	1,150,938	2,321,970	63,607	2,663	2,649	2,528	2,434
Tottori	1,836,172	1,765,961	1,779,178	36,708	316,666	1,405,592	31,641	1,457	1,450	1,398	1,360
Shimane	2,325,350	2,395,905	2,382,265	36,956	558,823	1,761,719	42,408	1,818	1,817	1,756	1,726
Okayama	7,064,698	7,222,681	7,242,774	73,327	2,205,356	4,891,389	128,979	4,907	4,888	4,707	4,572
Hiroshima	10,808,039	11,061,197	11,237,887	79,813	3,242,925	7,889,001	114,742	7,071	7,050	6,789	6,592
Yamaguchi	5,752,238	5,643,005	5,969,042	36,097	2,292,400	3,573,328	106,165	3,514	3,531	3,387	3,299
Tokushima	2,819,974	2,863,274	3,012,328	56,900	984,523	1,939,977	53,635	1,996	1,990	1,912	1,845
Kagawa	3,571,168	3,731,428	3,672,273	45,447	894,765	2,736,438	20,013	2,540	2,542	2,440	2,361
Ehime	4,887,896	5,100,033	4,756,495	90,200	1,185,870	3,437,941	77,587	3,458	3,457	3,318	3,206
Kochi	2,158,415	2,164,634	2,349,510	92,914	369,282	1,862,520	42,265	1,804	1,798	1,733	1,678
Fukuoka	18,041,898	17,945,938	18,112,171	129,107	3,468,327	14,312,677	320,410	11,401	11,539	10,943	10,825
Saga	2,867,595	2,673,583	2,737,221	72,453	770,321	1,860,331	48,647	1,938	1,948	1,870	1,844
Nagasaki	4,377,020	4,409,382	4,310,310	111,936	698,386	3,454,595	76,786	3,161	3,166	3,035	2,989
Kumamoto	5,559,799	5,611,936	5,599,928	190,936	1,225,719	4,122,901	98,713	4,026	4,062	3,906	3,840
Oita	4,293,466	4,255,542	4,142,638	90,986	1,197,444	2,815,368	73,487	2,791	2,813	2,705	2,652
Miyazaki	3,496,699	3,498,167	3,643,441	158,375	818,582	2,622,718	68,586	2,491	2,514	2,440	2,394
Kagoshima	5,446,148	5,438,005	5,330,338	197,293	961,053	4,118,266	94,919	3,702	3,750	3,620	3,556
Okinawa	3,725,567	3,795,466	4,051,060	61,503	561,425	3,424,229	30,236	2,852	2,955	2,917	2,953

Notes:
1) Quantity of electricity used is a sum of data from 10 electric companies.
2) Due to rounding up/down, each number and totals may not be consistent.

Source: Prefectural gross product:
"Annual Report of Prefectural Accounts, "
Economic and Social Research Institute, Cabinet Office

Energy use:
"Handbook of Electric Utilities " by Statistics Committee Federation of Electric Utility Companies

1.02 Chart of Japan's energy balance flow (FY2016)

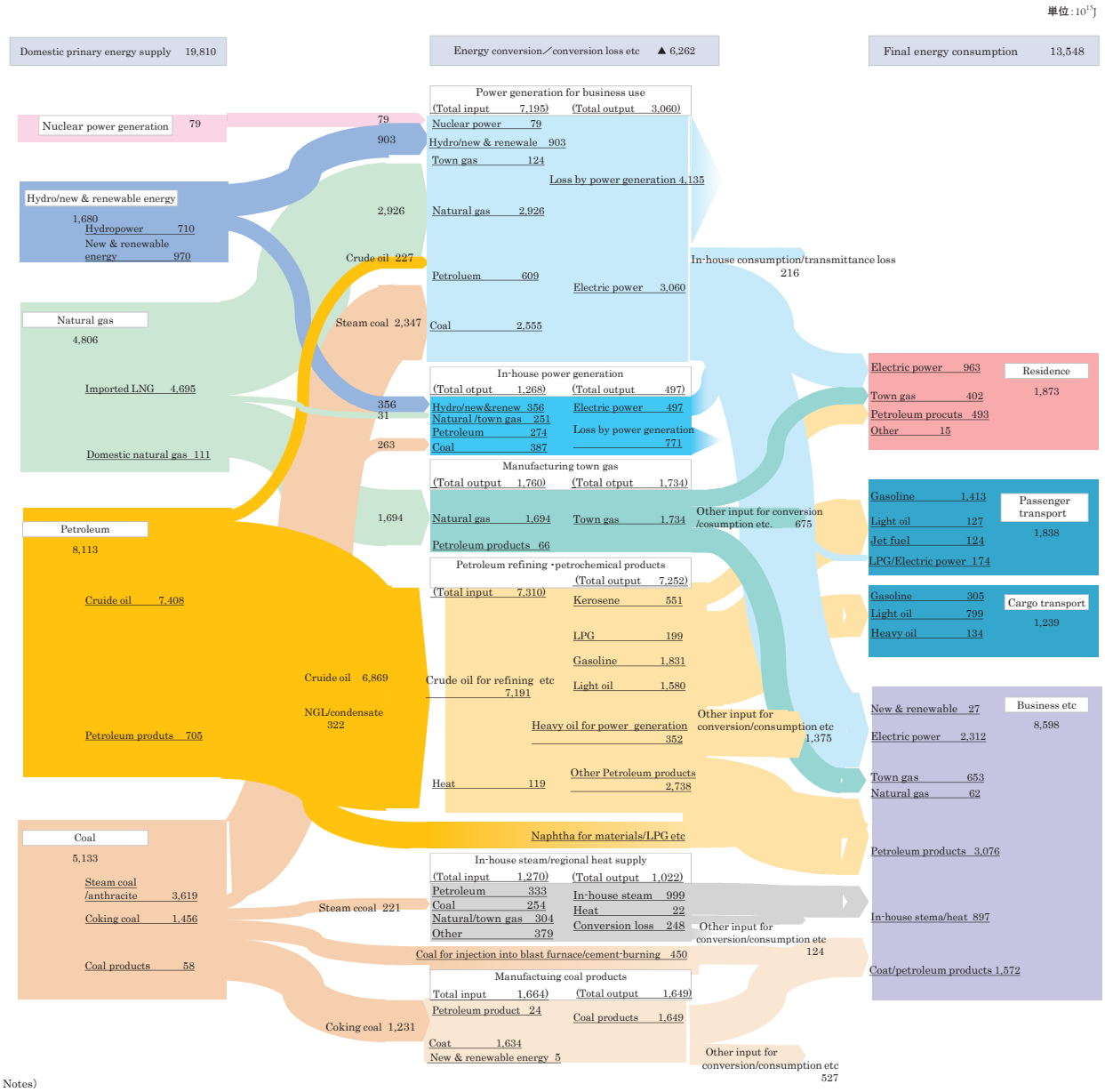

Notes)

・This chart presents the outline of Japan's energy flow, and does not show the detail of the flows,

・"Petroleum" includes petroleum products, in addition to crude oil, NGL, and condensate,

・"Coal" includes coal products in addition to steam coal and anthracite,

Source: "Energy White Paper 2016," Agency for Natural Resources and Energy, Ministry of Economy, Trade and Industry

1.03 Trends in total amount of domestic primary energy supply

(Unit : 10^{15}J)

	Total	Comparison with the previous year (%)	Breakdown												
			Crude oil	Coal	Coal products	Oil products	Natural gas	Nuclear power	Hydroelectric power for business	Unutilized energy	Solar energy	Geothermal energy	Biomass energy	Natural temperature fluctuate power	Wind energy
FY 1990	20,202.0	-	9,163.7	3,352.0	15.4	2,341.2	2,059.2	1,884.5	809.5	304.2	57.8	16.2	198.5	0.0	0.0
			45.4%	16.6%	0.1%	11.6%	10.2%	9.3%	4.0%	1.5%	0.3%	0.1%	1.0%	0.0%	0.0%
1991	20,412.8	1.0%	9,161.7	3,476.0	19.3	2,134.5	2,165.6	1,986.9	886.4	310.3	56.0	16.5	199.8	0.0	0.0
			44.9%	17.0%	0.1%	10.5%	10.6%	9.7%	4.3%	1.5%	0.3%	0.1%	1.0%	0.0%	0.0%
1992	20,900.0	2.4%	9,816.9	3,366.7	13.1	2,083.0	2,220.9	2,075.4	749.6	309.4	53.3	16.6	195.0	0.0	0.0
			47.0%	16.1%	0.1%	10.0%	10.6%	9.9%	3.6%	1.5%	0.3%	0.1%	0.9%	0.0%	0.0%
1993	21,206.2	1.5%	9,847.6	3,383.3	12.6	1,917.1	2,284.2	2,322.3	869.5	314.2	52.8	16.6	186.0	0.0	0.0
			46.4%	16.0%	0.1%	9.0%	10.8%	11.0%	4.1%	1.5%	0.2%	0.1%	0.9%	0.0%	0.0%
1994	22,292.5	5.1%	10,517.2	3,610.4	12.6	2,050.5	2,411.0	2,497.6	609.5	323.6	52.4	19.2	188.5	0.0	0.0
			47.2%	16.2%	0.1%	9.2%	10.8%	11.2%	2.7%	1.5%	0.2%	0.1%	0.8%	0.0%	0.0%
1995	22,712.2	1.9%	10,204.0	3,736.1	18.0	2,226.3	2,479.5	2,694.5	741.5	335.6	51.5	29.4	195.8	0.0	0.0
			44.9%	16.4%	0.1%	9.8%	10.9%	11.9%	3.3%	1.5%	0.2%	0.1%	0.9%	0.0%	0.0%
1996	23,014.9	1.3%	10,134.5	3,793.1	24.1	2,315.7	2,628.7	2,774.8	722.1	342.4	49.2	33.7	196.6	0.0	0.0
			44.0%	16.5%	0.1%	10.1%	11.4%	12.1%	3.1%	1.5%	0.2%	0.1%	0.9%	0.0%	0.0%
1997	23,336.8	1.4%	10,269.2	3,887.4	49.8	2,065.2	2,735.8	2,899.0	796.1	350.1	47.6	34.1	202.5	0.0	0.0
			44.0%	16.7%	0.2%	8.8%	11.7%	12.4%	3.4%	1.5%	0.2%	0.1%	0.9%	0.0%	0.0%
1998	22,702.0	-2.7%	9,756.0	3,688.5	24.9	2,025.9	2,796.7	2,997.7	814.0	341.0	39.4	31.8	186.1	0.0	0.1
			43.0%	16.2%	0.1%	8.9%	12.3%	13.2%	3.6%	1.5%	0.2%	0.1%	0.8%	0.0%	0.0%
1999	22,857.0	0.7%	9,532.9	3,867.0	59.2	2,268.6	2,941.6	2,822.8	752.3	352.3	35.7	30.8	193.5	0.0	0.3
			41.7%	16.9%	0.3%	9.9%	12.9%	12.3%	3.3%	1.5%	0.2%	0.1%	0.8%	0.0%	0.0%
2000	23,600.2	3.3%	9,761.3	4,210.7	76.2	2,252.2	3,060.7	2,859.1	756.7	354.7	37.9	29.7	199.9	0.0	1.0
			41.4%	17.8%	0.3%	9.5%	13.0%	12.1%	3.2%	1.5%	0.2%	0.1%	0.8%	0.0%	0.0%
2001	22,855.4	-3.2%	9,177.8	4,329.3	50.7	2,063.8	3,075.0	2,823.7	726.2	359.0	35.0	30.3	182.4	0.0	2.2
			40.2%	18.9%	0.2%	9.0%	13.5%	12.4%	3.2%	1.6%	0.2%	0.1%	0.8%	0.0%	0.0%
2002	22,959.7	0.5%	9,258.7	4,439.9	70.1	2,168.8	3,119.0	2,577.3	703.5	364.4	34.8	29.5	190.0	0.0	3.6
			40.3%	19.3%	0.3%	9.4%	13.6%	11.2%	3.1%	1.6%	0.2%	0.1%	0.8%	0.0%	0.0%
2003	22,951.4	0.0%	9,297.1	4,574.2	73.3	2,149.7	3,315.1	2,093.9	807.2	379.5	29.9	30.4	194.1	0.0	7.2
			40.5%	19.9%	0.3%	9.4%	14.4%	9.1%	3.5%	1.7%	0.1%	0.1%	0.8%	0.0%	0.0%
2004	23,640.2	3.0%	9,227.6	4,965.1	93.3	2,151.2	3,291.9	2,470.7	803.9	375.3	27.3	29.5	193.0	0.0	11.4
			39.0%	21.0%	0.4%	9.1%	13.9%	10.5%	3.4%	1.6%	0.1%	0.1%	0.8%	0.0%	0.0%
2005	23,755.1	0.5%	9,506.1	4,747.7	81.3	2,127.6	3,288.5	2,661.7	667.9	373.5	26.7	28.2	230.8	0.0	15.3
			40.0%	20.0%	0.3%	9.0%	13.8%	11.2%	2.8%	1.6%	0.1%	0.1%	1.0%	0.0%	0.1%
2006	23,773.1	0.1%	9,111.0	4,806.4	58.7	2,065.0	3,600.6	2,645.6	763.1	417.7	25.9	26.9	233.3	0.0	18.9
			38.3%	20.2%	0.2%	8.7%	15.1%	11.1%	3.2%	1.8%	0.1%	0.1%	1.0%	0.0%	0.1%
2007	23,794.9	0.1%	9,255.8	5,010.1	64.2	1,940.2	3,892.4	2,306.1	646.9	361.6	24.6	26.6	243.6	0.0	22.9
			38.9%	21.1%	0.3%	8.2%	16.4%	9.7%	2.7%	1.5%	0.1%	0.1%	1.0%	0.0%	0.1%
2008	23,150.4	-2.7%	8,929.1	4,932.4	44.5	1,836.4	3,882.6	2,237.1	662.5	323.3	23.7	23.8	229.4	0.0	25.5
			38.6%	21.3%	0.2%	7.9%	16.8%	9.7%	2.9%	1.4%	0.1%	0.1%	1.0%	0.0%	0.1%
2009	21,686.4	-6.3%	8,065.9	4,391.3	12.6	1,764.9	3,781.3	2,398.1	659.2	326.2	21.4	24.7	209.8	0.0	31.0
			37.2%	20.2%	0.1%	8.1%	17.4%	11.1%	3.0%	1.5%	0.1%	0.1%	1.0%	0.0%	0.1%
2010	23,199.5	7.0%	8,162.0	4,967.5	29.9	1,926.1	4,001.7	2,464.8	703.0	520.9	20.2	22.6	346.9	0.0	33.9
			35.2%	21.4%	0.1%	8.3%	17.2%	10.6%	3.0%	2.2%	0.1%	0.1%	1.5%	0.0%	0.1%
2011	22,047.1	-5.0%	8,011.2	4,661.3	26.2	2,102.3	4,695.7	875.0	715.4	535.9	19.2	23.0	342.8	0.0	39.2
			36.3%	21.1%	0.1%	9.5%	21.3%	4.0%	3.2%	2.4%	0.1%	0.1%	1.6%	0.0%	0.2%
2012	21,720.5	-1.5%	8,049.3	4,873.8	29.2	2,199.8	4,890.7	137.1	649.1	467.3	18.4	22.4	342.7	0.0	40.6
			37.1%	22.4%	0.1%	10.1%	22.5%	0.6%	3.0%	2.2%	0.1%	0.1%	1.6%	0.0%	0.2%
2013	21,979.6	1.2%	8,028.9	5,249.5	64.2	2,016.4	4,953.5	80.0	671.3	452.4	26.8	22.3	370.5	0.0	43.7
			36.5%	23.9%	0.3%	9.2%	22.5%	0.4%	3.1%	2.1%	0.1%	0.1%	1.7%	0.0%	0.2%
2014	21,118.7	-3.9%	7,463.4	4,989.6	98.4	1,973.0	4,963.0	0.0	687.4	445.4	47.1	21.7	387.6	0.0	42.3
			35.3%	23.6%	0.5%	9.3%	23.5%	0.0%	3.3%	2.1%	0.2%	0.1%	1.8%	0.0%	0.2%
2015	20,934.2	-0.9%	7,435.5	5,075.1	80.4	1,922.8	4,662.0	78.7	710.2	444.1	70.9	21.5	389.9	0.0	43.0
			35.2%	24.0%	0.4%	9.1%	22.1%	0.4%	3.4%	2.1%	0.3%	0.1%	1.8%	0.0%	0.2%

Source: "Comprehensive Energy Statistics," Agency for Natural Resources and Energy

1.04 Trends in final domestic energy consumption

(Unit : 10^{15}J)

	Total	Comparison with the previous year (%)	Breakdown			
			Industry	Home	Business and others	Transportation
FY 1990	13,540.1	-	7,020.1	1,683.0	1,788.8	3,048.1
			51.8%	12.4%	13.2%	22.5%
1991	13,736.4	1.4%	6,962.8	1,721.9	1,820.6	3,231.0
			50.7%	12.5%	13.3%	23.5%
1992	13,856.6	0.9%	6,882.3	1,797.6	1,855.6	3,321.1
			49.7%	13.0%	13.4%	24.0%
1993	14,006.7	1.1%	6,771.7	1,890.5	1,972.5	3,371.9
			48.3%	13.5%	14.1%	24.1%
1994	14,505.0	3.4%	6,999.4	1,896.9	2,100.4	3,508.3
			48.3%	13.1%	14.5%	24.2%
1995	14,964.1	3.1%	7,105.1	2,004.8	2,216.8	3,637.5
			47.5%	13.4%	14.8%	24.3%
1996	15,203.3	1.6%	7,210.7	2,013.6	2,245.0	3,734.0
			47.4%	13.2%	14.8%	24.6%
1997	15,316.6	0.7%	7,199.9	2,007.4	2,352.8	3,756.5
			47.0%	13.1%	15.4%	24.5%
1998	15,113.5	-1.3%	6,777.1	2,024.7	2,582.9	3,728.8
			44.8%	13.4%	17.1%	24.7%
1999	15,488.0	2.4%	6,963.9	2,079.4	2,659.8	3,784.9
			45.0%	13.4%	17.2%	24.4%
2000	15,655.2	1.1%	7,037.6	2,142.4	2,706.4	3,768.8
			45.0%	13.7%	17.3%	24.1%
2001	15,455.1	-1.3%	6,822.8	2,084.7	2,718.6	3,829.1
			44.1%	13.5%	17.6%	24.8%
2002	15,680.5	1.4%	6,994.0	2,156.8	2,761.3	3,768.4
			44.6%	13.8%	17.6%	24.0%
2003	15,531.7	-1.0%	7,004.8	2,094.3	2,726.0	3,706.6
			45.1%	13.5%	17.6%	23.9%
2004	15,738.1	1.3%	7,077.5	2,119.6	2,919.5	3,621.5
			45.0%	13.5%	18.6%	23.0%
2005	15,670.5	-0.4%	6,962.3	2,204.9	2,967.3	3,536.0
			44.4%	14.1%	18.9%	22.6%
2006	15,713.8	0.3%	7,217.4	2,127.9	2,878.1	3,490.4
			45.9%	13.5%	18.3%	22.2%
2007	15,446.2	-1.7%	7,138.7	2,157.4	2,701.8	3,448.3
			46.2%	14.0%	17.5%	22.3%
2008	14,359.2	-7.6%	6,338.4	2,079.1	2,618.0	3,323.7
			44.1%	14.5%	18.2%	23.1%
2009	14,089.4	-1.9%	6,187.7	2,057.5	2,569.3	3,275.0
			43.9%	14.6%	18.2%	23.2%
2010	14,698.0	4.1%	6,682.4	2,173.9	2,556.4	3,285.3
			45.5%	14.8%	17.4%	22.4%
2011	14,300.1	-2.8%	6,526.7	2,082.4	2,451.0	3,240.0
			45.6%	14.6%	17.1%	22.7%
2012	14,115.4	-1.3%	6,376.5	2,065.1	2,362.2	3,311.6
			45.2%	14.6%	16.7%	23.5%
2013	14,009.1	-0.8%	6,230.9	2,012.2	2,531.0	3,235.0
			44.5%	14.4%	18.1%	23.1%
2014	13,744.3	-1.9%	6,172.8	1,936.7	2,506.5	3,128.4
			44.9%	14.1%	18.2%	22.8%
2015	13,548.4	-1.4%	6,138.6	1,873.4	2,459.6	3,076.8
			44.7%	13.6%	17.9%	22.4%

Source: "Comprehensive Energy Statistics," Agency for Natural Resources and Energy

1.05 Fuel consumption for residential and commercial industry use

(Unit: 10^{15}J)

	Total	Residential				Commercial industry (Tertiary Industry)			
			Oil products	Town gas	Electricity		Oil products	Town gas	Electricity
FY 1990	3,472	1,683	613	343	663	1,789	1,000	79	525
1995	4,222	2,005	722	499	827	2,217	1,087	103	797
2000	4,848	2,142	755	419	928	2,706	1,186	177	1,047
2005	5,172	2,205	722	436	1,019	2,967	1,253	230	1,152
2010	4,730	2,174	626	427	1,099	2,556	832	278	1,278
2011	4,533	2,082	91	427	1,045	2,451	859	257	1,169
2012	4,432	2,065	586	426	1,034	2,367	679	294	1,203
2013	4,543	2,012	558	410	1,027	2,531	747	327	1,264
2014	4,355	1,937	517	417	986	2,418	735	369	1,225

Source: "JAPAN STATISTICAL YEARBOOK ," Statistics Bureau, Ministry of Internal Affairs and Communication
(http://www.stat.go.jp/data/nenkan/66nenkan/11.htm)

1.06 Supply and demand of food (1)

	Domestic production (Thousand t)	Foreign trade		Changes in stock [1]	Supplies for domestic consumption (Thousand t)	Net food supply per capita					Self-sufficiency ratio (%)
		Imports (Thousand t)	Exports (Thousand t)			Quantity Per year (kg)	Per day				
							Quantity (g)	Calories (kcal)	Protein (g)	Lipid (g)	
【Rice】											
FY2000	9,490	879	462	-76	9,790	64.6	177.0	630.0	10.8	1.6	95
2005	8,998	978	179	252	9,222	61.4	168.2	598.9	10.3	1.5	95
2010	8,554	831	201	-240	9,018	59.5	163.0	580.4	9.9	1.5	97
2011	8,566	997	171	-217	9,018	57.8	158.0	562.5	9.6	1.4	96
2012	8,692	848	132	358	8,667	56.3	154.1	548.7	9.4	1.4	96
2013	8,718	833	100	266	8,697	56.9	155.9	555.0	9.5	1.4	96
【Wheat】											
FY2000	688	5,688	0	65	6,311	32.6	89.2	328.3	9.8	1.9	11
2005	875	5,292	0	-46	6,213	31.7	86.9	319.9	9.6	1.8	14
2010	571	5,473	0	-340	6,384	32.7	89.5	329.5	9.8	1.9	9
2011	746	6,480	0	525	6,701	32.8	89.6	329.6	9.9	1.9	11
2012	858	6,578	0	269	7,167	32.9	90.3	332.2	9.9	1.9	12
2013	812	5,737	0	-443	6,992	32.7	89.6	329.8	9.9	1.9	12
【Barley】											
FY2000	192	2,438	0	24	2,606	0.3	0.8	2.8	0.1	0.0	7
2005	171	2,030	0	-64	2,265	0.2	0.6	1.9	0.0	0.0	8
2010	149	1,902	0	-36	2,087	0.2	0.5	1.6	0.0	0.0	7
2011	158	1,970	0	-14	2,142	0.3	0.7	2.4	0.0	0.0	7
2012	160	1,895	0	0	2,055	0.2	0.6	1.9	0.0	0.0	8
2013	168	1,880	0	-15	2,063	0.2	0.6	2.0	0.0	0.0	8
【Miscellaneous cereals】											
FY2000	30	18,634	0	328	18,336	1.0	2.8	10.3	0.3	0.1	0
2005	34	18,642	0	749	17,927	1.2	3.3	12.3	0.3	0.2	0
2010	31	17,831	0	598	17,264	1.0	2.8	10.4	0.3	0.1	0
2011	33	16,972	0	97	16,908	1.2	3.1	11.5	0.3	0.1	0
2012	46	16,597	0	331	16,312	1.2	3.2	11.6	0.3	0.1	0
2013	34	16,429	0	245	16,218	1.2	3.4	12.3	0.3	0.1	0
【Sweet potatoes】											
FY2000	1,073	11	0	0	1,084	4.9	13.4	17.7	0.2	0.0	99
2005	1,053	85	1	0	1,137	4.9	13.4	17.7	0.2	0.0	93
2010	864	65	2	0	927	3.8	10.4	13.8	0.1	0.0	93
2011	886	71	1	0	956	4.1	11.3	15.0	0.1	0.0	93
2012	876	72	2	0	946	4.1	11.2	14.8	0.1	0.0	93
2013	942	78	3	0	1,017	4.2	11.6	15.3	0.1	0.0	93
【Irish potatoes】											
FY2000	2,898	820	3	0	3,715	16.2	44.4	33.8	0.7	0.0	78
2005	2,752	807	1	0	3,558	14.8	40.6	30.9	0.7	0.0	77
2010	2,290	959	2	0	3,247	14.8	40.4	30.7	0.6	0.0	71
2011	2,387	1,009	2	0	3,394	15.9	43.4	33.0	0.7	0.0	70
2012	2,500	1,028	2	0	3,526	16.3	44.8	34.0	0.7	0.0	71
2013	2,408	970	3	0	3,375	15.4	42.3	32.1	0.7	0.0	71
【Pulses】[2]											
FY2000	366	5,165	0	106	5,425	9.0	24.8	105.0	7.5	4.9	7
2005	352	4,482	0	44	4,790	9.3	25.4	107.6	7.8	5.0	7
2010	317	3,748	0	30	4,035	8.4	23.1	98.4	7.1	4.7	8
2011	310	3,134	0	-137	3,581	8.3	22.6	96.2	7.0	4.6	9
2012	340	3,015	0	-64	3,419	8.1	22.3	94.3	6.8	4.4	10
2013	300	3,038	0	-46	3,384	8.2	22.4	94.7	6.9	4.4	9
【Vegetables】[3]											
FY2000	13,704	3,124	2	0	16,826	102.4	280.6	82.9	3.4	0.6	81
2005	12,492	3,367	10	0	15,849	96.3	263.8	77.6	3.3	0.5	79
2010	11,730	2,783	5	0	14,508	88.1	241.5	70.4	3.0	0.5	81
2011	11,821	3,094	5	0	14,910	90.9	248.3	72.3	3.0	0.5	79
2012	12,012	3,302	4	0	15,310	93.5	256.1	74.4	3.1	0.5	78
2013	11,781	3,189	8	0	14,962	91.7	251.1	72.4	3.0	0.5	79

1.06 Supply and demand of food (2)

	Domestic production (Thousand t)	Foreign trade		Changes in stock [1]	Supplies for domestic consumption (Thousand t)	Net food supply per capita					Self-sufficiency ratio (%)
		Imports (Thousand t)	Exports (Thousand t)			Quantity Per year (kg)	Per day				
							Quantity (g)	Calories (kcal)	Protein (g)	Lipid (g)	
【Fruits】[4]											
FY2000	3,847	4,843	68	-69	8,691	41.5	113.8	66.0	0.9	0.7	44
2005	3,703	5,437	64	40	9,036	43.1	118.0	70.2	0.9	1.0	41
2010	2,960	4,756	42	-45	7,719	36.6	100.2	62.6	0.8	1.0	38
2011	2,954	4,960	34	43	7,837	37.1	101.4	62.9	0.8	1.0	38
2012	3,062	5,007	26	27	8,016	38.3	104.8	66.0	0.9	1.1	38
2013	3,035	4,711	38	26	7,682	36.8	100.8	63.7	0.9	1.1	40
【Meat】											
FY2000	2,982	2,755	3	51	5,683	28.8	78.8	171.1	14.4	11.7	52
2005	3,045	2,703	2	97	5,649	28.5	78.0	166.7	14.3	11.3	54
2010	3,215	2,588	13	21	5,796	29.1	79.6	169.8	14.6	11.5	56
2011	3,168	2,735	6	41	5,856	29.6	80.8	172.5	14.8	11.7	54
2012	3,273	2,636	9	-24	5,924	30.0	82.2	174.5	15.1	11.8	55
2013	3,284	2,635	12	-16	5,923	30.1	82.3	174.9	15.1	11.8	55
【Beef】											
FY2000	521	1,055	0	22	1,554	7.6	20.7	57.3	3.5	4.5	34
2005	497	654	0	0	1,151	5.6	15.2	42.8	2.6	3.4	43
2010	512	731	1	24	1,218	5.9	16.1	45.4	2.7	3.6	42
2011	505	737	1	-9	1,250	6.0	16.5	46.5	2.8	3.7	40
2012	514	722	1	8	1,227	5.9	16.3	45.8	2.7	3.6	42
2013	506	765	1	31	1,239	6.0	16.5	46.4	2.8	3.7	41
【Pork】											
FY2000	1,256	952	0	20	2,188	10.6	29.2	66.6	5.3	4.7	57
2005	1,242	1,298	0	46	2,494	12.1	33.0	75.4	6.0	5.3	50
2010	1,277	1,143	1	3	2,416	11.7	31.9	72.9	5.8	5.1	53
2011	1,277	1,198	1	13	2,461	11.9	32.5	74.2	5.9	5.2	52
2012	1,295	1,141	1	-12	2,447	11.8	32.5	74.1	5.9	5.2	53
2013	1,310	1,113	2	-18	2,439	11.8	32.4	74.0	5.9	5.2	54
【Chicken】											
FY2000	1,195	686	3	13	1,865	10.2	28.0	45.6	5.4	2.4	64
2005	1,293	679	2	51	1,919	10.5	28.6	46.6	5.5	2.5	67
2010	1,417	674	11	-7	2,087	11.3	31.1	50.5	6.0	2.7	68
2011	1,378	763	4	38	2,099	11.4	31.2	50.8	6.0	2.7	66
2012	1,457	736	7	-18	2,204	12.0	33.0	53.6	6.4	2.9	66
2013	1,459	717	9	-28	2,195	12.0	32.9	53.5	6.3	2.9	66
【Hen eggs】											
FY2000	2,535	121	0	0	2,656	17.0	46.5	70.2	5.7	4.8	95
2005	2,469	151	1	0	2,619	16.6	45.5	68.6	5.6	4.7	94
2010	2,506	114	1	0	2,619	16.5	45.3	68.5	5.6	4.7	96
2011	2,495	138	0	0	2,633	16.7	45.6	68.8	5.6	4.7	95
2012	2,502	123	1	0	2,624	16.7	45.6	68.9	5.6	4.7	95
2013	2,519	124	1	0	2,642	16.8	46,0	69,5	5.7	4.7	95
【Cow milk and milk products】											
FY2000	8,414	3,952	13	44	12,309	94.2	258.2	165.2	8.3	9.0	68
2005	8,293	3,836	8	-23	12,144	91.8	251.5	160.9	8.0	8.8	68
2010	7,631	3,528	24	-231	11,366	86.4	236.7	151.5	7.6	8.3	67
2011	7,534	4,025	8	-84	11,635	88.6	242.1	154.9	7.7	8.5	65
2012	7,608	4,194	9	72	11,721	89.5	245.2	156.9	7.8	8.6	65
2013	7,448	4,058	15	-144	11,635	89.0	243.8	156.0	7.8	8.5	64
【Fishes and shellfishes】[4]											
FY2000	5,736	5,883	264	543	10,812	37.2	101.8	135.8	19.4	5.5	53
2005	5,152	5,782	647	86	10,201	34.6	94.9	137.0	18.3	6.2	51
2010	4,782	4,841	706	216	8,701	29.4	80.6	110.3	15.9	4.5	55
2011	4,328	4,482	530	32	8,248	28.5	77.9	107.3	15.4	4.4	52
2012	4,325	4,586	540	74	8,297	28.9	79.1	105.6	15.7	4.1	52
2013	4,289	4,081	680	-178	7,868	27.4	75,2	99,8	14,9	3,8	55

1.06 Supply and demand of food (3)

	Domestic production (Thousand t)	Foreign trade		Changes in stock [1]	Supplies for domestic consumption (Thousand t)	Net food supply per capita					Self-sufficiency ratio (%)
		Imports (Thousand t)	Exports (Thousand t)			Quantity Per year (kg)	Per day				
							Quantity (g)	Calories (kcal)	Protein (g)	Lipid (g)	
【Seaweeds】[4) 5)]											
FY2000	130	78	2	0	206	1.4	3.8	6.1	1.1	0.1	63
2005	123	70	3	0	190	1.2	3.4	5.4	1.0	0.1	65
2010	106	47	2	0	151	1.0	2.7	4.1	0.7	0.1	70
2011	88	55	2	0	141	0.9	2.5	3.7	0.6	0.1	62
2012	108	51	1	0	158	1.1	2.9	4.3	0.7	0.1	68
2013	101	48	2	0	147	1.0	2.6	3.9	0.7	0.1	69
【Sugar】[6)]											
FY2000	2,413	500	3	3	2,907	20.2	55.4	212.3	0.0	0.0	29
2005	2,315	567	2	28	2,852	19.9	54.6	209.5	0.0	0.0	34
2010	2,152	538	7	-26	2,709	18.9	51.9	199.0	0.0	0.0	26
2011	2,147	581	2	43	2,683	18.8	51.6	197.8	0.0	0.0	26
2012	2,093	571	1	2	2,661	18.8	51.5	197.6	0.0	0.0	28
2013	2,126	574	1	2	2,697	19.0	52.1	199.8	0.0	0.0	29
【Fats and oils】[4)]											
FY2000	2,200	725	18	11	2,896	15.1	41.5	382.9	0.0	41.5	14
2005	2,037	964	19	-13	2,995	14.6	39.9	368.3	0.0	39.9	13
2010	1,980	929	14	-25	2,920	13.5	36.9	340.5	0.0	36.9	13
2011	1,946	967	12	-4	2,905	13.5	37.0	341.3	0.0	37.0	13
2012	1,950	985	13	6	2,916	13.6	37.2	343.2	0.0	37.2	13
2013	1,946	966	16	-55	2,951	13.6	37.3	343.8	0.0	37.3	13
＜Vegetable oils and fats＞											
FY2000	1,862	579	17	10	2,414	13.7	37.5	345.5	0.0	37.5	3
2005	1,715	838	17	-13	2,549	13.5	36.9	339.7	0.0	36.9	2
2010	1,657	846	12	-22	2,513	12.7	34.7	319.8	0.0	34.7	2
2011	1,635	881	9	8	2,499	12.7	34.7	320.0	0.0	34.7	3
2012	1,640	886	11	7	2,508	12.8	34.9	321.8	0.0	34.9	3
2013	1,622	903	11	-35	2,549	12.8	35.0	322.1	0.0	35.0	3
＜Animal oils and fats＞											
FY2000	338	146	1	1	482	1.4	4.0	37.4	0.0	4.0	70
2005	322	126	2	0	446	1.1	3.0	28.6	0.0	3.0	72
2010	323	83	2	-3	407	0.8	2.2	20.7	0.0	2.2	79
2011	311	86	3	-12	406	0.8	2.3	21.3	0.0	2.3	77
2012	310	99	2	-1	408	0.8	2.3	21.4	0.0	2.3	76
2013	324	63	3	-20	404	0.9	2.3	22.1	0.0	2.3	80
【Soy sauce】											
FY2000	1,061	0	11	1	1,049	8.2	22.6	16.0	1.7	0.0	-
2005	939	1	18	-1	923	7.2	19.7	14.0	1.5	0.0	-
2010	845	1	18	-1	829	6.5	17.7	12.6	1.4	0.0	-
2011	821	1	19	-1	804	6.3	17.1	12.2	1.3	0.0	-
2012	802	2	17	-1	788	6.2	16.9	12.0	1.3	0.0	-
2013	808	2	20	0	790	6.2	17.0	12.0	1.3	0.0	-

Notes:

1. Differences in stocks between the beginning and the end of the fiscal year.
2. For soy beans, calendar year is applied.
3. For imports and exports, calendar year is applied.
4. Calendar year.
5. Total of refined sugar, brown sugar and un-centrifugal sugar.

Source: "JAPAN STATISTICAL YEARBOOK ," Statistic Bureau, Ministry of Internal Affairs and Communications

1.07 Energy consumption by manufacturing industry (by industry type)

（Unit：10^{10} kcal）

	Manufacturing industry											
		Raw materials					Non-raw materials					
			Iron & Steel	Chemicals	Ceramics and cement	Paper and pulp		Foods and tobacco	Textile	Non-ferrous metals	Machinery	Others
FY 1965	62,737	48,636	19,210	16,484	7,737	5,205	14,103	2,974	2,767	1,860	2,383	4,119
1970	125,837	100,058	43,082	36,854	12,073	8,049	25,779	3,960	5,454	3,819	4,593	7,953
1975	138,083	105,899	49,698	35,346	12,192	8,663	32,185	4,640	6,494	3,889	3,818	13,344
1980	132,978	99,240	44,766	32,645	13,357	8,472	33,738	4,561	4,891	4,411	4,653	15,222
1985	125,058	90,704	39,431	32,335	10,947	7,991	34,355	4,212	4,105	3,137	7,244	15,657
1990	142,762	102,992	42,118	39,048	11,946	9,880	39,770	4,878	3,448	3,965	9,571	17,909
1991	144,298	104,122	40,937	41,380	12,304	9,501	40,176	4,910	3,287	4,148	9,522	18,309
1992	141,131	101,817	39,216	40,801	12,278	9,522	39,312	5,036	3,313	3,917	9,388	17,658
1993	141,315	101,573	38,948	40,789	12,300	9,536	39,742	4,985	3,328	3,967	9,274	18,188
1994	147,549	107,402	40,116	44,839	12,586	9,861	40,146	5,100	3,332	3,984	9,516	18,214
1995	150,864	109,687	40,441	46,172	12,645	10,429	41,179	5,341	3,383	3,772	9,666	19,017
1996	153,422	110,874	41,305	46,778	12,578	10,213	42,548	5,411	3,176	3,595	9,892	20,474
1997	155,591	113,578	42,723	48,041	12,395	10,419	42,013	5,424	3,061	3,551	10,247	19,730
1998	152,318	109,816	40,753	47,510	11,942	9,611	42,501	5,519	3,015	3,393	9,988	20,586
1999	160,005	114,902	41,698	51,473	11,641	10,090	45,101	5,536	3,150	3,519	10,164	22,732
2000	162,552	117,218	43,220	52,283	11,143	10,572	45,334	5,562	2,973	3,462	10,426	22,911
2001	151,599	107,670	39,469	48,805	10,618	8,778	43,929	5,382	2,736	3,190	8,961	23,660
2002	154,100	109,096	40,327	50,072	9,857	8,840	45,004	5,470	2,614	3,177	9,203	24,540
2003	155,756	110,287	40,477	51,415	9,629	8,766	45,469	5,494	2,561	3,095	9,330	24,989
2004	155,949	110,722	40,255	52,185	9,748	8,534	45,227	5,519	2,416	3,110	9,729	24,453
2005	157,575	112,287	40,327	53,797	9,607	8,556	45,288	5,506	2,280	3,222	10,282	23,998
2006	159,255	113,245	40,844	54,435	9,717	8,249	46,010	5,634	2,228	3,281	11,233	23,634
2007	158,751	113,505	41,871	54,107	9,622	7,905	45,246	5,668	1,816	3,449	11,319	22,994
2008	143,842	101,197	37,034	47,599	9,191	7,373	42,645	5,517	1,772	3,279	10,090	21,987
2009	140,431	100,293	35,133	48,624	8,505	8,031	40,138	5,465	1,910	2,975	9,324	20,464
2010	149,157	106,966	39,717	49,873	8,711	8,665	42,191	5,715	2,189	3,051	10,132	21,104
2011	145,336	103,316	39,354	46,012	8,301	9,649	42,020	5,637	2,223	3,060	9,740	21,360
2012	142,860	101,671	38,726	45,154	8,107	9,684	41,189	5,589	2,224	2,930	9,451	20,995
2013	146,013	105,518	39,730	46,748	8,382	10,658	40,495	5,531	1,745	2,878	9,079	21,262
2014	143,220	103,585	39,578	45,234	8,134	10,639	39,635	5,422	1,772	2,938	8,995	20,508
2015	141,994	101,437	37,889	45,533	7,657	10,358	40,557	5,413	1,715	2,894	8,947	21,588

Source: "2017 EDMC HANDBOOK of ENERGY & ECONOMIC STATISTICS in JAPAN," the Energy Data and Modelling Center (EDMC), the Institute of Energy Economics, Japan (IEEJ)

1.08 Energy intensity of manufacturing (IIP basis)

（FY 1973＝100）

	Manufacturing											
		Raw-materials					Non-raw materials					
			Iron & steel	Chemicals	Ceramics & cement	Paper and pulp		Foods and tobacco	Fiber	Non-ferrous metals	Machinery	Others
FY 1965	107.8	105.5	103.2	108.1	117.9	113.1	112.6	93.0	60.5	112.7	168.2	69.7
1970	103.8	103.8	101.4	109.7	102.7	100.1	97.4	92.1	91.2	113.2	121.0	76.8
1973	100.0	100.0	100.0	100.0	100.0	100.0	100.0	100.0	100.0	100.0	100.0	100.0
1975	104.3	102.4	109.0	93.5	103.8	102.9	112.5	98.1	112.7	102.5	91.1	128.2
1980	74.2	74.2	81.1	64.2	88.9	80.4	83.9	85.7	83.0	89.6	68.5	124.8
1985	58.5	61.5	69.5	51.4	74.8	65.4	69.2	76.7	71.5	61.7	77.3	126.1
1990	52.9	55.5	66.2	46.0	68.7	60.8	63.0	83.4	66.1	59.4	74.9	119.9
1991	53.9	56.6	66.7	48.4	72.7	57.8	64.1	83.6	64.0	61.6	74.9	125.5
1992	56.0	57.3	69.0	48.0	77.0	59.5	67.7	85.1	69.4	59.6	81.2	126.2
1993	58.2	58.2	71.7	48.0	79.8	60.5	71.2	84.0	77.6	60.9	83.6	134.7
1994	58.9	58.7	70.9	49.5	79.6	60.4	70.1	85.4	80.6	59.2	82.1	136.8
1995	59.0	58.9	71.7	49.2	80.9	61.8	70.3	90.1	88.6	55.3	79.7	144.8
1996	58.1	58.6	73.0	48.9	79.1	59.9	69.8	90.4	85.1	50.3	77.4	151.8
1997	58.2	59.7	74.4	49.7	80.0	59.7	68.0	92.1	85.7	49.5	78.1	148.2
1998	61.2	62.0	81.1	51.3	86.6	57.1	73.5	95.2	95.2	51.8	81.7	164.4
1999	62.6	63.1	80.0	53.3	85.6	58.1	76.1	94.6	104.8	51.7	80.0	183.3
2000	61.0	62.8	76.4	53.3	82.3	60.0	72.9	95.2	108.2	47.6	76.1	187.8
2001	62.7	60.2	74.1	51.1	84.8	51.7	79.3	93.4	110.5	45.6	75.3	210.5
2002	61.9	59.8	70.9	51.1	81.8	51.4	78.8	96.1	117.3	44.7	73.6	220.1
2003	60.8	59.3	68.8	51.1	80.5	51.1	77.1	95.7	125.4	42.4	71.1	224.6
2004	58.6	58.5	66.4	51.0	81.8	49.1	73.3	95.4	127.8	42.6	69.6	218.7
2005	58.3	59.9	67.3	53.5	80.1	48.7	71.7	97.3	130.8	43.3	70.9	213.4
2006	56.3	58.5	65.4	52.0	80.3	47.0	69.3	101.2	133.5	42.9	72.7	203.1
2007	54.7	58.2	65.6	51.7	79.9	44.6	66.0	99.9	115.7	44.6	70.3	196.7
2008	56.7	57.4	68.7	49.2	87.9	44.5	71.9	99.1	130.1	50.6	73.9	208.2
2009	61.2	58.8	74.2	49.5	89.7	51.6	76.5	100.0	167.3	48.9	79.1	206.4
2010	59.7	59.1	71.5	49.5	82.4	54.5	73.1	107.3	179.8	47.0	76.1	204.3
2011	58.5	58.4	72.9	46.4	82.3	62.0	72.9	106.8	180.7	47.9	73.0	209.2
2012	59.3	58.2	72.6	46.3	79.4	63.9	74.0	106.6	186.8	46.2	74.0	207.9
2013	58.7	58.9	72.5	47.1	78.4	67.7	70.3	103.1	147.3	45.1	68.3	206.4
2014	57.9	59.1	73.1	47.1	75.9	68.7	68.8	104.6	152.8	45.8	67.0	204.7
2015	58.0	58.0	74.1	46.3	74.1	66.4	71.4	102.3	150.0	45.7	67.8	218.4

Source: "2017 EDMC HANDBOOK of ENERGY & ECONOMIC STATISTICS in JAPAN," the Energy Data and Modelling Center (EDMC), the Institute of Energy Economics, Japan (IEEJ)

1.09 Residential energy consumption by use

	Energy consumption by use (10^{10} kcal)						Growth rates (%)					
	Space cooling	Space heating	Water heating	Cooking	Power, etc.	Total	Space cooling	Space heating	Water heating	Cooking	Power, etc.	Total
FY 1965	55	3,279	3,619	1,709	2,034	10,696	-	-	-	-	-	8.8
1970	163	7,004	4,868	2,466	3,828	18,329	24.8	15.9	5.4	0.3	15.3	10.6
1975	285	7,529	7,987	3,523	6,252	25,575	18.0	2.8	2.4	3.5	11.3	4.9
1980	223	8,234	10,280	3,550	7,833	30,120	-42.1	-8.0	-3.4	-7.1	0.8	-4.6
1985	643	10,547	12,402	3,713	9,578	36,883	25.4	12.7	-0.9	3.6	3.5	4.7
1990	950	10,439	14,677	3,806	12,508	42,380	50.8	-0.8	-0.2	-1.6	5.8	2.0
1991	748	10,546	14,948	3,752	13,333	43,327	-21.3	1.0	1.9	-1.4	6.6	2.2
1992	836	11,150	15,978	3,776	13,633	45,373	11.8	5.7	6.9	0.6	2.3	4.7
1993	523	12,012	17,033	3,794	13,947	47,310	-37.4	7.7	6.6	0.5	2.3	4.3
1994	1,475	12,157	15,276	3,967	14,491	47,366	181.9	1.2	-10.3	4.6	3.9	0.1
1995	1,199	13,509	16,466	4,047	15,352	50,573	-18.7	11.1	7.8	2.0	5.9	6.8
1996	969	12,661	16,929	3,878	16,092	50,529	-19.2	-6.3	2.8	-4.2	4.8	-0.1
1997	1,058	11,778	17,338	3,972	16,290	50,437	9.3	-7.0	2.4	2.4	1.2	-0.2
1998	1,231	12,572	14,825	4,107	16,740	49,474	16.3	6.7	-14.5	3.4	2.8	-1.9
1999	1,329	13,581	14,714	4,203	17,054	50,881	8.0	8.0	-0.7	2.4	1.9	2.8
2000	1,391	13,928	15,688	4,283	17,398	52,688	4.7	2.6	6.6	1.9	2.0	3.6
2001	1,237	12,721	15,979	4,081	17,594	51,611	-11.1	-8.7	1.9	-4.7	1.1	-2.0
2002	1,289	14,350	15,976	4,142	18,047	53,804	4.2	12.8	0.0	1.5	2.6	4.2
2003	957	12,670	16,266	4,231	17,911	52,035	-25.8	-11.7	1.8	2.1	-0.8	-3.3
2004	1,461	13,639	15,924	4,285	18,100	53,409	52.6	7.6	-2.1	1.3	1.1	2.6
2005	1,349	15,038	16,509	4,227	18,512	55,635	-7.6	10.3	3.7	-1.4	2.3	4.2
2006	1,206	12,805	16,677	4,280	18,703	53,672	-10.6	-14.8	1.0	1.3	1.0	-3.5
2007	1,405	13,586	16,275	4,249	18,891	54,407	16.5	6.1	-2.4	-0.7	1.0	1.4
2008	1,134	12,756	15,150	4,267	18,801	52,108	-19.3	-6.1	-6.9	0.4	-0.5	-4.2
2009	920	12,842	14,779	4,235	18,894	51,670	-18.9	0.7	-2.4	-0.7	0.5	-0.8
2010	1,582	14,563	15,140	4,266	19,113	54,664	71.8	13.4	2.4	0.7	1.2	5.8
2011	1,184	14,013	14,868	4,320	18,358	52,743	-25.1	-3.8	-1.8	1.3	-3.9	-3.5
2012	1,136	13,694	14,402	4,320	18,288	51,841	-4.1	-2.3	-3.1	0.0	-0.4	-1.7
2013	1,233	12,996	13,717	4,387	18,203	50,537	8.6	-5.1	-4.8	1.6	-0.5	-2.5
2014	1,054	12,584	13,611	4,400	17,138	48,787	-14.5	-3.2	-0.8	0.3	-5.9	-3.5
2015	973	11,687	13,378	4,232	16,829	47,098	-7.8	-7.1	-1.7	-3.8	-1.8	-3.5

Source: "2017 EDMC HANDBOOK of ENERGY & ECONOMIC STATISTICS in JAPAN," the Energy Data and Modelling Center (EDMC), the Institute of Energy Economics, Japan (IEEJ)

1.10 Residential energy consumption by energy

	Energy consumption by energy （10^{10}kcal）							Growth rates						
	Coal, etc.	Kerosene	LPG	City gas	Electricity	Solar heat	Total	Coal, etc.	Kerosene	LPG	City gas	Electricity	Solar heat	Total
FY 1965	3,776	1,614	1,288	1,580	2,438	-	10,696	-1.1	19.8	13.8	16.4	12.0	-	8.8
1970	2,404	5,717	2,686	2,943	4,579	-	18,329	-13.2	22.8	4.5	12.7	15.5	-	10.6
1975	861	7,568	4,658	4,544	7,808	136	25,575	-38.6	3.5	9.3	4.7	10.6	-	4.9
1980	529	8,565	5,065	5,649	9,947	365	30,120	-10.5	-12.3	-10.0	3.7	0.2	71.4	-4.6
1985	357	10,959	5,719	6,743	12,263	842	36,883	-12.7	8.7	2.0	3.0	3.9	8.4	4.7
1990	222	10,925	6,526	7,764	15,819	1,124	42,380	-10.1	-2.7	-1.1	-0.4	7.8	13.3	2.0
1991	208	10,837	6,558	8,163	16,481	1,080	43,327	-6.3	-0.8	0.5	5.1	4.2	-3.9	2.2
1992	199	11,844	6,757	8,492	17,045	1,036	45,373	-4.3	9.3	3.0	4.0	3.4	-4.1	4.7
1993	192	12,797	6,808	8,987	17,515	1,011	47,310	-3.5	8.0	0.8	5.8	2.8	-2.4	4.3
1994	175	12,033	6,838	8,398	18,930	992	47,366	-8.9	-6.0	0.4	-6.6	8.1	-1.9	0.1
1995	157	13,311	7,386	9,035	19,714	970	50,573	-10.3	10.6	8.0	7.6	4.1	-2.2	6.8
1996	144	12,803	7,504	9,170	19,976	932	50,529	-8.3	-3.8	1.6	1.5	1.3	-3.9	-0.1
1997	128	12,771	7,271	9,058	20,277	932	50,437	-11.1	-0.2	-3.1	-1.2	1.5	0.0	-0.2
1998	120	12,528	6,005	9,031	20,965	825	49,474	-6.3	-1.9	-17.4	-0.3	3.4	-11.5	-1.9
1999	123	13,333	5,826	9,278	21,570	750	50,881	2.2	6.4	-3.0	2.7	2.9	-9.1	2.8
2000	107	13,897	6,307	9,491	22,100	786	52,688	-12.7	4.2	8.2	2.3	2.5	4.7	3.6
2001	101	12,926	6,454	9,355	22,049	726	51,611	-5.6	-7.0	2.3	-1.4	-0.2	-7.6	-2.0
2002	95	13,758	6,819	9,673	22,793	666	53,804	-5.9	6.4	5.7	3.4	3.4	-8.3	4.2
2003	90	12,501	6,685	9,706	22,435	618	52,035	-5.3	-9.1	-2.0	0.3	-1.6	-7.2	-3.3
2004	80	13,110	6,689	9,463	23,488	579	53,409	-11.1	4.9	0.1	-2.5	4.7	-6.3	2.6
2005	76	13,867	6,915	9,928	24,301	548	55,635	-5.0	5.8	3.4	4.9	3.5	-5.4	4.2
2006	74	12,339	6,948	9,765	24,026	520	53,672	-2.6	-11.0	0.5	-1.6	-1.1	-5.1	-3.5
2007	73	12,033	6,944	9,873	24,992	492	54,407	-1.4	-2.5	-0.1	1.1	4.0	-5.4	1.4
2008	72	11,029	6,303	9,646	24,590	468	52,108	-1.4	-8.3	-9.2	-2.3	-1.6	-4.9	-4.2
2009	66	10,904	6,070	9,629	24,573	428	51,670	-8.3	-1.1	-3.7	-0.2	-0.1	-8.5	-0.8
2010	68	11,895	6,273	9,789	26,244	395	54,664	3.0	9.1	3.3	1.7	6.8	-7.7	5.8
2011	66	11,486	6,069	9,791	24,970	361	52,743	-2.9	-3.4	-3.3	0.0	-4.9	-8.6	-3.5
2012	59	11,127	5,764	9,799	24,764	328	51,841	-10.6	-3.1	-5.0	0.1	-0.8	-9.1	-3.5
2013	60	10,475	5,511	9,554	24,640	297	50,537	1.7	-5.9	-4.4	-2.5	-0.5	-9.5	-2.5
2014	60	9,816	5,375	9,582	23,684	270	48,787	0.0	-6.3	-2.5	0.3	-3.9	-9.1	-3.5
2015	59	9,193	5,127	9,242	23,230	247	47,098	-1.7	-6.3	-4.6	-3.5	-1.9	-8.5	-3.5

Note:
"Coal, etc." is a total of coal, briquettes, firewood, charcoal and others.

Source: "2017 EDMC HANDBOOK of ENERGY & ECONOMIC STATISTICS in JAPAN," the Energy Data and Modelling Center (EDMC), the Institute of Energy Economics, Japan (IEEJ)

1.11 Residential energy consumption per household by use

	Consumption per household (Thousand kcal / household)						Growth rates					
	Space cooling	Space heating	Water heating	Cooking	Power, etc.	Total	Space cooling	Space heating	Water heating	Cooking	Power, etc.	Total
FY 1965	22	1,330	1,468	693	825	4,338	-	-	-	-	-	-
1970	56	2,403	1,670	846	1,313	6,289	20.7	12.1	2.0	-2.9	11.6	7.0
1975	85	2,260	2,398	1,058	1,877	7,678	15.6	0.7	0.3	1.4	9.0	2.8
1980	62	2,298	2,869	991	2,186	8,406	-42.9	-9.2	-4.7	-8.3	-0.5	-5.9
1985	167	2,743	3,225	966	2,491	9,591	23.7	11.2	-2.3	2.2	2.1	3.3
1990	231	2,537	3,566	925	3,039	10,297	48.6	-2.2	-1.6	-3.0	4.3	0.6
1991	179	2,523	3,576	898	3,190	10,366	-22.5	-0.5	0.3	-2.9	5.0	0.7
1992	197	2,626	3,763	889	3,211	10,686	10.1	4.1	5.2	-0.9	0.7	3.1
1993	121	2,789	3,954	881	3,238	10,983	-38.3	6.2	5.1	-1.0	0.8	2.8
1994	338	2,784	3,498	909	3,319	10,847	178.1	-0.2	-11.5	3.2	2.5	-1.2
1995	271	3,054	3,722	915	3,470	11,433	-19.8	9.7	6.4	0.7	4.6	5.4
1996	216	2,824	3,776	865	3,590	11,271	-20.3	-7.5	1.4	-5.4	3.4	-1.4
1997	233	2,589	3,811	873	3,580	11,085	7.7	-8.3	0.9	0.9	-0.3	-1.6
1998	267	2,724	3,212	890	3,627	10,719	14.6	5.2	-15.7	1.9	1.3	-3.3
1999	284	2,901	3,143	898	3,643	10,869	6.5	6.5	-2.1	0.9	0.4	1.4
2000	293	2,937	3,308	903	3,669	11,111	3.4	1.2	5.3	0.6	0.7	2.2
2001	258	2,649	3,328	850	3,664	10,749	-12.2	-9.8	0.6	-5.9	-0.1	-3.3
2002	265	2,950	3,285	852	3,710	11,062	2.9	11.4	-1.3	0.2	1.3	2.9
2003	194	2,572	3,302	859	3,636	10,563	-26.7	-12.8	0.5	0.9	-2.0	-4.5
2004	293	2,737	3,195	860	3,632	10,717	50.9	6.4	-3.2	0.1	-0.1	1.5
2005	268	2,985	3,277	839	3,674	11,043	-8.6	9.1	2.6	-2.4	1.2	3.0
2006	236	2,506	3,264	838	3,660	10,503	-11.8	-16.0	-0.4	-0.2	-0.4	-4.9
2007	272	2,627	3,147	822	3,653	10,521	15.1	4.8	-3.6	-1.9	-0.2	0.2
2008	217	2,438	2,895	815	3,593	9,959	-20.2	-7.2	-8.0	-0.8	-1.6	-5.3
2009	174	2,429	2,795	801	3,573	9,772	-19.7	-0.4	-3.5	-1.8	-0.6	-1.9
2010	296	2,729	2,837	799	3,582	10,244	70.3	12.4	1.5	-0.2	0.2	4.8
2011	220	2,605	2,764	803	3,413	9,807	-25.7	-4.5	-2.6	0.5	-4.7	-4.3
2012	210	2,528	2,659	797	3,376	9,570	-4.8	-3.0	-3.8	-0.7	-1.1	-2.4
2013	222	2,338	2,468	789	3,275	9,093	5.8	-7.5	-7.2	-1.0	-3.0	-5.0
2014	188	2,249	2,433	786	3,063	8,719	-15.1	-3.8	-1.4	-0.4	-6.5	-4.1
2015	172	2,072	2,371	750	2,983	8,349	-8.5	-7.9	-2.5	-4.6	-2.6	-4.2

Source: "2017 EDMC HANDBOOK of ENERGY & ECONOMIC STATISTICS in JAPAN," the Energy Data and Modelling Center (EDMC), the Institute of Energy Economics, Japan (IEEJ)

1.12 Residential energy consumption per household (by use and by energy)

(FY1970) （Thousand kcal / household、%）

	Space heating	Space cooling	Water heating	Cooking	Power, etc.	Total	Shares
Electric power	83	56	46	72	1,313	1,571	(25.0)
City gas	186	-	649	174	-	1,010	(16.1)
LPG	31	-	380	511	-	922	(14.7)
Kerosene	1,672	-	278	11	-	1,962	(31.2)
Coal, etc.	430	-	318	77	-	825	(13.1)
Solar heat	-	-	-	-	-	-	-
Total	2,403	56	1,670	846	1,313	6,289	(100.0)
Shares	(38.2)	(0.9)	(26.6)	(13.5)	(20.9)	(100.0)	

(FY1980)

	Space heating	Space cooling	Water heating	Cooking	Power, etc.	Total	Shares
Electric power	83	62	352	93	2,186	2,776	(33.0)
City gas	282	-	1,026	269	-	1,577	(18.8)
LPG	66	-	760	587	-	1,414	(16.8)
Kerosene	1,812	-	556	23	-	2,390	(28.4)
Coal, etc.	55	-	73	19	-	148	(1.8)
Solar heat	-	-	102	-	-	102	(1.2)
Total	2,298	62	2,869	991	2,186	8,406	(100.0)
Shares	(27.3)	(0.7)	(34.1)	(11.8)	(26.0)	(100.0)	

(FY1990)

	Space heating	Space cooling	Water heating	Cooking	Power, etc.	Total	Shares
Electric power	182	231	264	128	3,039	3,844	(37.3)
City gas	365	-	1,187	335	-	1,886	(18.3)
LPG	92	-	1,062	431	-	1,586	(15.4)
Kerosene	1,886	-	746	23	-	2,655	(25.8)
Coal, etc.	11	-	34	9	-	54	(0.5)
Solar heat	-	-	273	-	-	273	(2.7)
Total	2,537	231	3,566	925	3,039	10,297	(100.0)
Shares	(24.6)	(2.2)	(34.6)	(9.0)	(29.5)	(100.0)	

(FY2000)

	Space heating	Space cooling	Water heating	Cooking	Power, etc.	Total	Shares
Electric power	297	293	243	158	3,669	4,661	(41.9)
City gas	445	-	1,217	340	-	2,002	(18.0)
LPG	84	-	852	394	-	1,330	(12.0)
Kerosene	2,109	-	814	8	-	2,931	(26.4)
Coal, etc.	2	-	17	3	-	23	(0.2)
Solar heat	-	-	166	-	-	166	(1.5)
Total	2,937	293	3,308	903	3,669	11,111	(100.0)
Shares	(26.4)	(2.6)	(29.8)	(8.1)	(33.0)	(100.0)	

(FY2010)

	Space heating	Space cooling	Water heating	Cooking	Power, etc.	Total	Shares
Electric power	443	296	386	211	3,582	4,918	(48.0)
City gas	434	-	1,112	289	-	1,834	(17.9)
LPG	109	-	768	298	-	1,176	(11.5)
Kerosene	1,744	-	486	-	-	2,229	(21.8)
Coal, etc.	-	-	11	2	-	13	(0.1)
Solar heat	-	-	74	-	-	74	(0.7)
Total	2,729	296	2,837	799	3,582	10,244	(100.0)
Shares	(26.6)	(2.9)	(27.7)	(7.8)	(35.0)	(100.0)	

(FY2015)

	Space heating	Space cooling	Water heating	Cooking	Power, etc.	Total	Shares
Electric power	354	172	382	226	2,983	4,118	(49.3)
City gas	384	-	989	265	-	1,638	(19.6)
LPG	75	-	575	258	-	909	(10.9)
Kerosene	1,258	-	372	-	-	1,630	(19.5)
Coal, etc.	-	-	9	1	-	10	(0.1)
Solar heat	-	-	44	-	-	44	(0.5)
Total	2,072	172	2,371	750	2,983	8,349	(100.0)
Shares	(24.8)	(2.1)	(28.4)	(9.0)	(35.7)	(100.0)	

Note:
"Coal etc." is a total of coal, briquettes, firewood, charcoal and others.

Source: "2017 EDMC HANDBOOK of ENERGY & ECONOMIC STATISTICS in JAPAN," the Energy Data and Modelling Center (EDMC), the Institute of Energy Economics, Japan (IEEJ)

1.13 Penetration and ownership of home appliances

Penetration Rates (%), Ownership Rates (=units /100 households)

Use		Appliances	FY1965	1970	1975	1980	1985	1990	1991	1992	1993	1994	1995	1996	1997	1998	1999	2000
Penetration Rates	Air conditioner	Oil stove	45.8	82.0	89.5	91.3	84.0	75.3	72.3	72.1	68.9	67.7	66.1	65.7	61.2	60.4	60.4	58.9
		Heater	-	-	-	18.4	42.3	61.2	63.6	63.4	65.2	66.3	67.0	67.9	67.8	68.3	69.4	69.5
		Electric carpet	-	-	-	-	-	50.2	54.4	58.2	61.5	63.1	65.3	66.1	66.3	68.7	67.9	68.3
		Air conditioner	2.0	7.7	19.5	41.2	54.6	68.1	69.8	72.3	74.2	77.2	77.2	79.3	81.9	84.4	86.2	86.2
		Cooling	-	-	-	-	43.8	46.3	44.7	44.6	44.4	43.7	41.3	40.1	39.7	38.1	35.3	33.6
		Cooling and heating	-	-	-	-	20.0	38.0	40.0	47.2	48.5	53.4	56.7	60.2	64.9	67.0	71.7	72.9
	Water heating	Gas water boiler	-	46.0	69.1	77.3	69.3	62.1	62.9	58.4	60.1	58.3	55.0	54.9	52.3	52.0	51.2	49.0
		Water heater	-	-	-	-	24.8	37.0	30.0	31.1	30.4	30.4	30.3	30.8	31.7	32.5	33.4	33.0
	Cooking	Microwave oven	-	3.0	20.8	37.4	45.3	75.6	79.2	81.3	84.3	87.2	88.4	90.8	91.7	93.3	94.0	95.3
		Refrigerator	61.6	91.2	96.1	99.2	98.4	98.9	98.1	98.0	97.9	97.8	98.4	98.7	98.1	98.4	98.0	98.4
		(Over 300L)	-	-	-	-	-	-	54.7	58.4	60.8	61.5	62.6	65.5	67.3	68.6	70.2	72.5
		(Others)	-	-	-	-	-	-	52.7	50.7	48.5	48.1	46.7	44.9	42.6	41.8	40.3	38.8
	Others	Washing machine	75.5	93.6	98.1	99.2	99.6	99.4	99.2	99.2	99.3	99.0	99.2	99.6	99.3	99.0	99.3	99.3
		(Automatic)	-	-	-	-	33.9	42.7	45.8	49.3	53.4	58.0	61.9	67.3	72.4	75.3	78.6	82.0
		(Others)	-	-	-	-	68.0	61.1	57.8	54.6	50.5	46.5	42.6	38.4	31.7	29.1	26.3	22.6
		Clothes dryer	-	-	-	-	9.7	15.8	16.6	18.1	20.1	19.4	19.8	20.8	20.9	20.8	21.7	21.7
		(Washing machine integrated)	-	-	-	-	-	-	-	-	-	-	-	-	-	-	-	-
		(Others)	-	-	-	-	-	-	-	-	-	-	-	-	-	-	-	-
		Blanket dryer	-	-	-	17.8	19.5	30.6	34.4	35.8	36.2	38.1	37.4	38.7	37.1	37.8	36.5	37.0
		Color TV set	0.3	42.3	93.7	98.5	98.9	99.3	99.0	99.1	99.0	98.9	99.1	99.2	99.2	98.9	99.0	99.2
		(Over 29 inches)	-	-	-	-	-	-	30.5	33.6	38.0	37.9	39.2	43.1	45.7	48.0	49.0	50.9
		(Others)	-	-	-	-	-	-	89.1	88.7	87.3	86.9	87.0	86.4	85.4	83.9	84.3	83.5
		VTR	-	-	-	5.1	33.5	71.5	63.8	75.1	72.5	73.7	73.8	75.7	76.8	77.8	78.4	79.3
		Stereo set	16.7	33.9	53.8	58.5	60.5	57.9	61.0	61.3	60.1	57.7	58.2	56.3	55.2	54.6	55.5	52.9
		CD player	-	-	-	-	-	41.0	47.5	54.3	53.8	55.9	56.8	57.9	59.9	60.1	61.8	62.1
		Vacuum cleaner	41.2	74.3	92.7	95.4	98.2	98.7	98.1	98.4	98.3	98.3	98.2	98.1	98.3	98.6	98.2	98.3
		Personal Computer	-	-	-	-	-	11.5	12.2	11.9	13.9	15.6	17.3	22.1	25.2	29.5	38.6	50.1
Ownership rates		Oil stove	-	109.2	157.1	174.9	161.0	145.6	134.9	133.1	123.5	121.4	118.2	117.7	107.4	105.8	105.0	101.0
		Fan heater	-	-	-	-	40.5	74.7	81.2	86.2	91.1	94.1	99.0	103.1	103.6	105.3	107.9	111.2
		Air conditioner	-	8.8	24.8	57.9	88.0	126.5	131.2	147.5	151.6	160.3	166.1	179.3	191.7	200.7	207.6	217.4
		Refrigerator	-	94.4	108.9	115.2	114.3	119.4	117.2	119.0	119.6	121.0	119.4	120.5	120.7	120.7	121.6	121.4
		Color TV set	-	43.5	117.2	150.9	174.7	201.3	203.6	208.8	213.5	212.7	215.1	219.8	224.6	224.0	226.2	230.6
		(Cathode Ray Tube)	-	-	-	-	-	-	-	-	-	-	-	-	-	-	-	-
		(Thin type)	-	-	-	-	-	-	-	-	-	-	-	-	-	-	-	-
		Optical disk player & recorder	-	-	-	-	-	-	-	-	-	-	-	-	-	-	-	-
		Personal Computer	-	-	-	-	-	12.7	13.2	13.6	15.8	17.8	20.2	25.7	30.0	36.7	48.6	65.8
		Wash toilet	-	-	-	-	-	-	16.0	19.9	24.2	27.6	30.8	35.7	41.0	44.2	49.2	53.0

Use		Appliances	2001	2002	2003	2004	2005	2006	2007	2008	2009	2010	2011	2012	2013	2014	2015
Penetration Rates	Air conditioner	Oil stove	57.7	56.7	54.1	-	-	-	-	-	-	-	-	-	-	-	-
		Heater	71.8	72.5	72.8	-	-	-	-	-	-	-	-	-	-	-	-
		Electric carpet	68.6	67.1	65.2	-	-	-	-	-	-	-	-	-	-	-	-
		Air conditioner	87.2	88.8	87.1	87.0	88.2	88.6	89.0	87.9	89.0	89.2	90.0	90.5	90.6	91.2	92.5
		Cooling	32.7	30.1	25.9	-	-	-	-	-	-	-	-	-	-	-	-
		Cooling and heating	74.5	78.1	78.8	-	-	-	-	-	-	-	-	-	-	-	-
	Water heating	Gas water boiler	49.3	48.5	46.0	-	-	-	-	-	-	-	-	-	-	-	-
		Water heater	36.0	35.3	35.3	50.7	50.9	49.0	52.3	52.7	54.9	55.8	58.0	57.1	56.5	58.9	62.2
	Cooking	Microwave oven	95.7	95.8	96.5	-	-	-	-	-	-	-	-	-	-	-	-
		Refrigerator	98.4	98.9	98.4	-	-	-	-	-	-	-	-	-	-	-	-
		(Over 300L)	74.4	75.4	76.9	-	-	-	-	-	-	-	-	-	-	-	-
		(Others)	37.8	37.4	35.8	-	-	-	-	-	-	-	-	-	-	-	-
	Others	Washing machine	99.3	99.6	99.0	-	-	-	-	-	-	-	-	-	-	-	-
		(Automatic)	83.8	85.6	86.6	-	-	-	-	-	-	-	-	-	-	-	-
		(Others)	21.1	19.1	16.8	-	-	-	-	-	-	-	-	-	-	-	-
		Clothes dryer	22.8	22.7	22.4	25.9	27.3	28.6	31.1	29.2	30.1	29.8	32.2	31.7	55.2	58.3	59.1
		(Washing machine integrated)	-	-	-	-	-	-	-	-	-	-	-	-	41.9	44.0	45.1
		(Others)	-	-	-	-	-	-	-	-	-	-	-	-	23.8	26.1	26.5
		Blanket dryer	36.5	36.5	38.1	-	-	-	-	-	-	-	-	-	-	-	-
		Color TV set	99.3	99.4	99.0	99.3	99.4	99.5	99.7	99.4	99.5	99.6	99.4	99.3	96.5	97.5	98.1
		(Over 29 inches)	51.3	53.1	54.0	-	-	-	-	-	-	-	-	-	-	-	-
		(Others)	83.4	82.6	82.2	-	-	-	-	-	-	-	-	-	-	-	-
		VTR	79.6	81.4	82.6	-	-	-	-	-	-	-	-	-	-	-	-
		Stereo set	54.9	55.2	55.5	-	-	-	-	-	-	-	-	-	-	-	-
		CD player	60.5	60.3	60.9	-	-	-	-	-	-	-	-	-	-	-	-
		Vacuum cleaner	98.2	98.1	98.1	-	-	-	-	-	-	-	-	-	-	-	-
		Personal Computer	57.2	63.3	65.7	64.6	68.3	71.0	73.1	73.2	74.6	76.0	77.3	78.0	78.7	78.0	79.1
Ownership rates		Oil stove	100.6	96.3	91.0	-	-	-	-	-	-	-	-	-	-	-	-
		Fan heater	115.1	119.8	120.5	134.7	131.9	130.0	122.1	121.3	125.9	116.4	126.1	114.9	108.3	106.9	106.5
		Air conditioner	229.9	245.4	245.3	248.6	255.3	255.5	257.1	256.0	263.1	259.9	268.0	264.3	275.8	274.7	283.7
		Refrigerator	124.8	126.3	125.6	-	-	-	-	-	-	-	-	-	-	-	-
		Color TV set	235.0	237.8	238.4	252.0	250.3	248.0	241.5	243.1	243.0	239.6	232.4	225.9	208.1	211.3	215.5
		(Cathode Ray Tube)	-	-	-	237.8	226.4	210.5	182.9	164.6	134.5	75.9	34.6	25.7	-	-	-
		(Thin type)	-	-	-	14.2	23.9	37.4	58.6	78.5	108.5	163.7	197.8	200.2	208.1	211.3	215.5
		Optical disk player & recorder	21.9	28.4	39.6	70.1	90.8	97.5	108.5	113.3	119.9	133.1	140.4	144.1	121.5	128.5	133.3
		Personal Computer	78.4	87.9	92.6	95.8	104.1	107.0	110.1	111.8	118.2	122.9	129.9	128.1	131.2	126.8	128.0
		Wash toilet	59.1	66.9	69.7	78.2	82.1	86.7	91.7	93.5	96.7	95.9	100.1	102.9	105.9	108.4	115.3

Notes:

- In FY1980 and onward, figures are as of the end of fiscal year, and before FY1975, they are as of the previous month to the end of fiscal year (Feb.).
- Water heaters include solar water heater since FY1990.
- Survey on TV sets with CRT was discontinued in FY 2012.

Source: "2017 EDMC HANDBOOK of ENERGY & ECONOMIC STATISTICS in JAPAN," the Energy Data and Modelling Center (EDMC), the Institute of Energy Economics, Japan (IEEJ)

1.14 Commercial energy consumption by use

	Energy consumption by use （10^{10}kcal）						Growth rates （%）					
	Space cooling	Space heating	Water heating	Cooking	Power, etc.	Total	Space cooling	Space heating	Water heating	Cooking	Power, etc.	Total
FY 1965	213	3,155	2,862	685	1,089	8,004	-	-	-	-	-	-
1970	568	6,948	5,722	847	2,249	16,335	19.1	14.0	11.4	3.6	16.6	13.0
1975	1,202	10,040	7,908	1,018	3,822	23,989	10.9	-6.6	1.8	7.4	13.7	0.4
1980	1,181	9,960	7,531	1,467	6,223	26,362	-16.8	-0.8	-6.7	3.1	4.9	-1.9
1985	1,760	9,321	7,356	1,850	8,625	28,913	-4.3	1.7	-1.6	3.4	8.8	2.5
1990	2,946	9,548	9,221	2,314	12,438	36,467	27.2	7.7	4.3	4.9	7.1	7.8
1991	2,950	10,171	10,466	2,461	13,328	39,376	0.1	6.5	13.5	6.3	7.2	8.0
1992	2,920	11,017	10,098	2,492	14,000	40,528	-1.0	8.3	-3.5	1.3	5.0	2.9
1993	2,617	10,668	9,013	2,693	14,564	39,556	-10.4	-3.2	-10.7	8.1	4.0	-2.4
1994	3,898	10,488	9,635	2,785	15,498	42,304	48.9	-1.7	6.9	3.4	6.4	6.9
1995	3,724	11,507	9,439	2,952	15,986	43,608	-4.4	9.7	-2.0	6.0	3.1	3.1
1996	3,604	10,581	9,417	3,141	16,939	43,682	-3.3	-8.0	-0.2	6.4	6.0	0.2
1997	4,043	10,237	9,695	3,181	17,457	44,613	12.2	-3.3	3.0	1.3	3.1	2.1
1998	4,296	10,669	9,713	3,135	18,231	46,045	6.3	4.2	0.2	-1.5	4.4	3.2
1999	4,893	10,463	9,144	3,268	18,641	46,410	13.9	-1.9	-5.9	4.3	2.2	0.8
2000	5,167	10,605	8,988	3,515	18,698	46,973	5.6	1.4	-1.7	7.5	0.3	1.2
2001	5,351	9,239	8,809	3,546	19,346	46,290	3.6	-12.9	-2.0	0.9	3.5	-1.5
2002	5,710	10,500	8,210	3,494	19,481	47,397	6.7	13.7	-6.8	-1.4	0.7	2.4
2003	4,363	9,923	9,049	3,933	20,170	47,438	-23.6	-5.5	10.2	12.5	3.5	0.1
2004	5,756	9,803	8,537	3,805	20,546	48,447	31.9	-1.2	-5.7	-3.3	1.9	2.1
2005	5,209	10,027	8,048	3,901	19,762	46,946	-9.5	2.3	-5.7	2.5	-3.8	-3.1
2006	5,049	8,164	7,999	3,895	20,014	45,122	-3.1	-18.6	-0.6	-0.1	1.3	-3.9
2007	5,063	7,610	6,861	3,805	20,530	43,869	0.3	-6.8	-14.2	-2.3	2.6	-2.8
2008	5,037	6,702	6,381	3,732	20,323	42,176	-0.5	-11.9	-7.0	-1.9	-1.0	-3.9
2009	4,575	6,977	6,191	3,817	19,943	41,504	-9.2	4.1	-3.0	2.3	-1.9	-1.6
2010	5,486	7,084	5,964	3,870	21,613	44,017	19.9	1.5	-3.7	1.4	8.4	6.1
2011	4,786	6,965	5,681	3,772	20,339	41,543	-12.8	-1.7	-4.7	-2.5	-5.9	-5.6
2012	4,780	6,947	5,605	3,811	20,530	41,673	-0.1	-0.3	-1.3	1.0	0.9	0.3
2013	4,857	6,461	5,339	3,829	20,500	40,985	1.6	-7.0	-4.7	0.5	-0.1	-1.7
2014	4,309	6,150	5,036	3,820	20,370	39,685	-11.3	-4.8	-5.7	-0.2	-0.6	-3.2
2015	4,108	6,063	4,935	3,832	20,287	39,225	-4.7	-1.4	-2.0	0.3	-0.4	-1.2

Source: "2017 EDMC HANDBOOK of ENERGY & ECONOMIC STATISTICS in JAPAN," the Energy Data and Modelling Center (EDMC), the Institute of Energy Economics, Japan (IEEJ)

1.15 Commercial energy consumption by energy

	Energy consumption by energy（10^{10}kcal）						Growth rates（%）					
	Coal	Oil	Gas	Electricity	Heat	Total	Coal	Oil	Gas	Electricity	Heat	Total
FY 1965	1,163	4,320	1,209	1,312	-	8,004	-	-	-	-	-	-
1970	525	11,119	1,904	2,782	5	16,335	-18.7	14.9	8.7	17.1	25.0	13.0
1975	154	16,180	2,611	4,990	54	23,989	-32.8	-3.3	3.1	13.5	170.0	0.4
1980	736	14,884	3,224	7,411	107	26,362	-3.4	-4.1	2.9	0.5	12.6	-1.9
1985	1,014	13,458	3,904	10,357	180	28,913	-2.0	-0.1	3.3	6.3	5.9	2.5
1990	745	15,363	5,342	14,757	260	36,467	5.7	6.0	6.0	10.2	22.1	7.8
1991	658	17,118	5,754	15,534	312	39,376	-11.7	11.4	7.7	5.3	20.0	8.0
1992	644	17,523	5,981	16,053	327	40,528	-2.1	2.4	3.9	3.3	4.8	2.9
1993	736	15,543	6,368	16,559	350	39,556	14.3	-11.3	6.5	3.1	7.0	-2.4
1994	926	15,903	6,723	18,326	426	42,304	25.8	2.3	5.6	10.7	21.7	6.9
1995	1,089	16,053	7,131	18,835	500	43,608	17.6	0.9	6.1	2.8	17.4	3.1
1996	1,069	15,136	7,416	19,524	537	43,682	-1.8	-5.7	4.0	3.7	7.4	0.2
1997	976	15,055	7,695	20,307	580	44,613	-8.7	-0.5	3.8	4.0	8.0	2.1
1998	1,055	15,522	7,556	21,311	601	46,045	8.1	3.1	-1.8	4.9	3.6	3.2
1999	894	14,589	8,403	21,895	629	46,410	-15.3	-6.0	11.2	2.7	4.7	0.8
2000	943	14,000	8,848	22,524	658	46,973	5.5	-4.0	5.3	2.9	4.6	1.2
2001	978	12,572	8,975	23,104	661	46,290	3.7	-10.2	1.4	2.6	0.5	-1.5
2002	1,060	12,809	9,194	23,661	673	47,397	8.4	1.9	2.4	2.4	1.8	2.4
2003	1,030	12,835	9,442	23,463	668	47,438	-2.8	0.2	2.7	-0.8	-0.7	0.1
2004	1,006	12,185	9,769	24,775	712	48,447	-2.3	-5.1	3.5	5.6	6.6	2.1
2005	955	11,830	10,068	23,381	712	46,946	-5.1	-2.9	3.1	-5.6	0.0	-3.1
2006	1,041	10,188	9,932	23,276	685	45,122	9.0	-13.9	-1.4	-0.4	-3.8	-3.9
2007	806	8,642	9,941	23,775	705	43,869	-22.6	-15.2	0.1	2.1	2.9	-2.8
2008	665	7,422	9,770	23,651	668	42,176	-17.5	-14.1	-1.7	-0.5	-5.2	-3.9
2009	582	7,361	9,738	23,179	644	41,504	-12.5	-0.8	-0.3	-2.0	-3.6	-1.6
2010	615	7,143	10,082	25,507	670	44,017	5.7	-3.0	3.5	10.0	4.0	6.1
2011	580	6,954	9,746	23,649	614	41,543	-5.7	-2.6	-3.3	-7.3	-8.4	-5.6
2012	616	6,743	9,855	23,831	628	41,673	6.2	-3.0	1.1	0.8	2.3	0.3
2013	606	5,947	9,956	23,838	638	40,985	-1.6	-11.8	1.0	0.0	1.6	-1.7
2014	613	5,330	9,677	23,456	609	39,685	1.2	-10.4	-2.8	-1.6	-4.5	-3.2
2015	631	5,158	9,534	23,295	607	39,225	2.9	-3.2	-1.5	-0.7	-0.3	-1.2

Notes:
- “Gas” includes city gas and LP gas.
- “Thermal” includes geothermal and solar thermal.

Source: "2017 EDMC HANDBOOK of ENERGY & ECONOMIC STATISTICS in JAPAN," the Energy Data and Modelling Center (EDMC), the Institute of Energy Economics, Japan (IEEJ)

1.16 Commercial energy consumption by business type

	Energy consumption by business type (10^{10}kcal)									
	Office & Buildings	Department stores & Supermarkets	Wholesales & retails	Restaurants	Schools	Hotels & Inns	Hospitals	Theater & Amusement places	Others	Total
FY 1965	1,122	51	1,067	873	1,165	1,226	910	134	1,457	8,004
1970	2,700	120	2,317	1,759	2,376	3,048	2,203	328	1,486	16,335
1975	4,257	272	3,529	2,597	3,061	4,334	3,020	782	2,137	23,989
1980	4,514	341	4,276	2,798	3,206	3,773	2,998	722	3,734	26,362
1985	5,129	372	5,074	2,643	3,180	3,628	3,191	843	4,853	28,913
1990	6,911	493	6,455	3,239	3,564	4,778	4,222	1,022	5,785	36,467
1991	7,420	536	6,858	3,436	3,787	5,316	4,769	1,103	6,152	39,376
1992	7,718	552	7,261	3,465	3,831	5,391	4,788	1,189	6,332	40,528
1993	7,661	557	7,283	3,500	3,588	5,105	4,437	1,169	6,256	39,556
1994	8,301	639	7,727	3,642	3,700	5,467	4,738	1,267	6,823	42,304
1995	8,490	658	8,131	3,705	3,726	5,481	4,800	1,332	7,286	43,608
1996	8,494	672	8,174	3,799	3,626	5,474	4,803	1,328	7,312	43,682
1997	8,640	733	8,282	3,851	3,620	5,634	5,008	1,375	7,470	44,613
1998	8,791	758	8,723	3,872	3,650	5,715	5,261	1,428	7,847	46,045
1999	8,903	746	8,901	3,950	3,653	5,661	5,305	1,491	7,800	46,410
2000	8,931	764	9,120	4,060	3,633	5,626	5,393	1,496	7,951	46,973
2001	8,844	778	8,835	4,026	3,520	5,535	5,336	1,453	7,962	46,290
2002	8,923	786	9,297	4,016	3,585	5,451	5,480	1,557	8,302	47,397
2003	8,668	759	9,227	4,190	3,549	5,570	5,648	1,485	8,343	47,438
2004	9,100	805	9,432	4,157	3,585	5,538	5,745	1,577	8,509	48,447
2005	8,658	759	9,355	4,031	3,439	5,249	5,646	1,545	8,265	46,946
2006	8,553	738	8,663	3,903	3,309	5,118	5,433	1,433	7,973	45,122
2007	8,727	737	8,548	3,798	3,264	4,847	5,080	1,423	7,446	43,869
2008	8,652	715	8,169	3,662	3,152	4,654	4,818	1,363	6,991	42,176
2009	8,501	682	8,203	3,630	3,130	4,562	4,727	1,333	6,736	41,504
2010	9,291	733	8,775	3,760	3,385	4,703	4,911	1,468	6,992	44,017
2011	8,720	657	8,313	3,533	3,217	4,404	4,666	1,367	6,666	41,543
2012	8,820	641	8,312	3,499	3,292	4,330	4,648	1,369	6,763	41,673
2013	8,841	621	8,028	3,413	3,346	4,212	4,517	1,353	6,655	40,985
2014	8,657	586	7,779	3,303	3,317	4,009	4,313	1,304	6,417	39,685
2015	8,567	579	7,679	3,235	3,328	3,930	4,259	1,282	6,365	39,225

	Growth rates (%)									
	Office & Buildings	Department stores & Supermarkets	Wholesales & retails	Restaurants	Schools	Hotels & Inns	Hospitals	Theater & Amusement places	Others	Total
FY 1965	-	-	-	-	-	-	-	-	-	-
1970	16.2	19.3	14.9	12.5	12.1	13.3	14.0	16.9	4.0	13.0
1975	2.5	7.8	2.3	0.6	-6.2	0.6	-0.3	-0.4	2.7	0.4
1980	-2.7	-3.7	1.2	-0.9	0.6	-6.8	-3.4	-2.5	-0.7	-1.9
1985	3.8	2.1	4.7	-1.2	2.2	0.2	0.9	5.4	3.6	2.5
1990	8.9	8.3	9.5	6.3	5.8	7.2	7.7	8.9	6.8	7.8
1991	7.4	8.8	6.2	6.1	6.3	11.3	13.0	7.9	6.4	8.0
1992	4.0	3.0	5.9	0.9	1.2	1.4	0.4	7.8	2.9	2.9
1993	-0.7	0.9	0.3	1.0	-6.3	-5.3	-7.3	-1.7	-1.2	-2.4
1994	8.4	14.6	6.1	4.1	3.1	7.1	6.8	8.4	9.1	6.9
1995	2.3	2.9	5.2	1.7	0.7	0.3	1.3	5.1	6.8	3.1
1996	0.0	2.2	0.5	2.5	-2.7	-0.1	0.1	-0.3	0.4	0.2
1997	1.7	9.0	1.3	1.4	-0.2	2.9	4.3	3.5	2.2	2.1
1998	1.8	3.5	5.3	0.6	0.8	1.4	5.0	3.8	5.0	3.2
1999	1.3	-1.7	2.0	2.0	0.1	-0.9	0.8	4.5	-0.6	0.8
2000	0.3	2.5	2.5	2.8	-0.6	-0.6	1.7	0.3	1.9	1.2
2001	-1.0	1.8	-3.1	-0.8	-3.1	-1.6	-1.1	-2.9	0.1	-1.5
2002	0.9	1.0	5.2	-0.3	1.8	-1.5	2.7	7.2	4.3	2.4
2003	-2.9	-3.5	-0.8	4.3	-1.0	2.2	3.1	-4.6	0.5	0.1
2004	5.0	6.1	2.2	-0.8	1.0	-0.6	1.7	6.2	2.0	2.1
2005	-4.9	-5.7	-0.8	-3.0	-4.1	-5.2	-1.7	-2.0	-2.9	-3.1
2006	-1.2	-2.7	-7.4	-3.2	-3.8	-2.5	-3.8	-7.3	-3.5	-3.9
2007	2.0	-0.1	-1.3	-2.7	-1.4	-5.3	-6.5	-0.7	-6.6	-2.8
2008	-0.9	-3.0	-4.4	-3.6	-3.4	-4.0	-5.2	-4.2	-6.1	-3.9
2009	-1.7	-4.7	0.4	-0.9	-0.7	-2.0	-1.9	-2.2	-3.6	-1.6
2010	9.3	7.5	7.0	3.6	8.2	3.1	3.9	10.2	3.8	6.1
2011	-6.1	-10.4	-5.3	-6.0	-5.0	-6.4	-5.0	-6.9	-4.7	-5.6
2012	1.1	-2.4	0.0	-1.0	2.3	-1.7	-0.4	0.1	1.5	0.3
2013	0.2	-3.1	-3.4	-2.5	1.6	-2.7	-2.8	-1.2	-1.6	-1.7
2014	-2.1	-5.7	-3.1	-3.2	-0.9	-4.8	-4.5	-3.6	-3.6	-3.2
2015	-1.0	-1.1	-1.3	-2.1	0.3	-2.0	-1.3	-1.6	-0.8	-1.2

Notes:
- "Others" includes welfare facilities, libraries, museums, gyms, assembly facilities and the like.
- "Amusement spot" includes play houses, motion picture theaters, halls, civic auditoriums, and so forth.

Source: "2017 EDMC HANDBOOK of ENERGY & ECONOMIC STATISTICS in JAPAN," the Energy Data and Modelling Center (EDMC), the Institute of Energy Economics, Japan (IEEJ)

1.17 Commercial energy consumption per floor space by use

	Energy consumption by purpose（1000 kcal/㎡）						Growth rates （%）					
	Space cooling	Space heating	Water heating	Cooking	Power, etc.	Total	Space cooling	Space heating	Water heating	Cooking	Power, etc.	Total
FY 1965	5.1	75.7	68.6	16.4	26.1	191.9	-	-	-	-	-	-
1970	10.1	124.1	102.2	15.1	40.2	291.7	11.4	6.7	4.3	-3.1	9.1	5.7
1975	15.9	133.2	104.9	13.5	50.7	318.2	4.9	-11.6	-3.7	1.6	7.6	-5.1
1980	12.6	106.4	80.4	15.7	66.5	281.6	-20.3	-5.0	-10.7	-1.2	0.4	-6.1
1985	16.0	84.5	66.7	16.8	78.2	262.1	-7.0	-1.3	-4.4	0.4	5.7	-0.4
1990	22.9	74.3	71.8	18.0	96.8	283.8	23.8	4.8	1.5	2.1	4.2	4.9
1991	22.2	76.6	78.8	18.5	100.4	296.5	-3.1	3.1	9.9	2.9	3.7	4.5
1992	21.4	80.7	73.9	18.2	102.5	296.8	-3.8	5.3	-6.2	-1.5	2.1	0.1
1993	18.6	75.8	64.0	19.1	103.5	281.0	-13.0	-6.0	-13.4	4.9	0.9	-5.3
1994	26.8	72.1	66.3	19.2	106.6	290.9	44.1	-4.8	3.5	0.1	3.0	3.5
1995	24.9	76.8	63.0	19.7	106.7	291.0	-7.3	6.5	-4.9	2.9	0.1	0.0
1996	23.6	69.2	61.6	20.5	110.7	285.5	-5.2	-9.9	-2.3	4.2	3.8	-1.9
1997	25.8	65.4	62.0	20.3	111.6	285.2	9.7	-5.4	0.7	-0.9	0.8	-0.1
1998	26.8	66.7	60.7	19.6	113.9	287.7	3.8	1.9	-2.1	-3.7	2.1	0.9
1999	30.0	64.1	56.1	20.0	114.3	284.5	11.8	-3.8	-7.6	2.3	0.3	-1.1
2000	31.2	64.1	54.3	21.2	112.9	283.7	4.0	-0.2	-3.2	5.9	-1.2	-0.3
2001	31.7	54.8	52.2	21.0	114.8	274.6	1.7	-14.4	-3.7	-0.9	1.6	-3.2
2002	33.5	61.7	48.2	20.5	114.5	278.5	5.7	12.6	-7.7	-2.4	-0.3	1.4
2003	25.3	57.6	52.6	22.8	117.1	275.5	-24.5	-6.6	9.0	11.3	2.4	-1.1
2004	33.1	56.4	49.1	21.9	118.1	278.5	30.6	-2.2	-6.6	-4.2	0.8	1.1
2005	29.6	57.0	45.7	22.2	112.3	266.8	-10.5	1.1	-6.8	1.4	-4.9	-4.2
2006	28.4	46.0	45.0	21.9	112.7	254.1	-4.0	-19.3	-1.5	-1.1	0.4	-4.8
2007	28.3	42.5	38.3	21.2	114.6	244.9	-0.6	-7.6	-15.0	-3.1	1.7	-3.6
2008	27.8	37.0	35.2	20.6	112.2	232.8	-1.6	-12.9	-8.1	-3.1	-2.1	-5.0
2009	25.1	38.3	34.0	21.0	109.5	227.9	-9.6	3.6	-3.5	1.7	-2.4	-2.1
2010	30.0	38.7	32.6	21.2	118.1	240.6	19.4	1.1	-4.1	0.9	7.9	5.6
2011	26.2	38.1	31.1	20.6	111.3	227.4	-12.6	-1.5	-4.6	-2.4	-5.8	-5.5
2012	26.0	37.8	30.5	20.7	111.7	226.8	-0.7	-0.8	-1.9	0.4	0.4	-0.3
2013	26.3	34.9	28.9	20.7	110.8	221.6	0.9	-7.6	-5.4	-0.2	-0.8	-2.3
2014	23.2	33.1	27.1	20.6	109.6	213.5	-11.7	-5.3	-6.1	-0.7	-1.1	-3.7
2015	22.0	32.4	26.4	20.5	108.5	209.9	-5.2	-2.0	-2.5	-0.2	-0.9	-1.7

Source: "2017EDMC HANDBOOK of ENERGY & ECONOMIC STATISTICS in JAPAN," the Energy Data and Modelling Center (EDMC), the Institute of Energy Economics, Japan (IEEJ)

1.18 Commercial energy consumption per floor space by use and energy

FY 1970 （Unit：1,000 kcal/㎡, %）

	Space heating	Space cooling	Water heating	Cooking	Power, etc.	Total	Shares
Electricity	2.6	7.0	-	-	40.2	49.7	(17.0)
Gas	6.7	-	14.3	13.0	-	34.0	(11.7)
Oil	113.3	3.2	82.1	-	-	198.5	(68.1)
Coal	1.5	-	5.8	2.1	-	9.4	(3.2)
Heat	-	-	0.1	-	-	0.1	(0.0)
Total	124.1	10.1	102.2	15.1	40.2	291.7	(100.0)
Shares	(42.5)	(3.5)	(35.0)	(5.2)	(13.8)	(100.0)	

FY 1980

	Space heating	Space cooling	Water heating	Cooking	Power, etc.	Total	Shares
Electricity	3.1	9.6	-	-	66.5	79.2	(28.1)
Gas	5.8	0.3	14.4	13.9	-	34.4	(12.2)
Oil	96.2	2.7	60.0	-	-	159.0	(56.5)
Coal	1.3	-	4.8	1.8	-	7.9	(2.8)
Heat	-	-	1.1	-	-	1.1	(0.4)
Total	106.4	12.6	80.4	15.7	66.5	281.6	(100.0)
Shares	(37.8)	(4.5)	(28.6)	(5.6)	(23.6)	(100.0)	

FY 1990

	Space heating	Space cooling	Water heating	Cooking	Power, etc.	Total	Shares
Electricity	2.1	15.2	0.3	0.4	96.8	114.8	(40.5)
Gas	5.5	4.4	15.4	16.3	-	41.6	(14.6)
Oil	65.6	3.0	51.0	-	-	119.5	(42.1)
Coal	0.9	-	3.6	1.3	-	5.8	(2.0)
Heat	0.1	0.4	1.5	-	-	2.0	(0.7)
Total	74.3	22.9	71.8	18.0	96.8	283.8	(100.0)
Shares	(26.2)	(8.1)	(25.3)	(6.3)	(34.1)	(100.0)	

FY 2000

	Space heating	Space cooling	Water heating	Cooking	Power, etc.	Total	Shares
Electricity	4.1	16.4	1.0	1.6	112.9	136.0	(48.0)
Gas	7.9	11.1	16.0	18.4	-	53.4	(18.8)
Oil	50.6	2.2	31.8	-	-	84.6	(29.8)
Coal	0.9	-	3.5	1.3	-	5.7	(2.0)
Heat	0.5	1.5	2.0	-	-	4.0	(1.4)
Total	64.1	31.2	54.3	21.2	112.9	283.7	(100.0)
Shares	(22.6)	(11.0)	(19.1)	(7.5)	(39.8)	(100.0)	

FY 2010

	Space heating	Space cooling	Water heating	Cooking	Power, etc.	Total	Shares
Electricity	3.7	13.4	1.7	2.5	118.1	139.4	(57.9)
Gas	9.0	13.8	14.5	17.9	-	55.1	(22.9)
Oil	24.9	1.2	13.0	-	-	39.0	(16.2)
Coal	0.5	-	2.1	0.8	-	3.4	(1.4)
Heat	0.6	1.6	1.4	-	-	3.7	(1.5)
Total	38.7	30.0	32.6	21.2	118.1	240.6	(100.0)
Shares	(16.1)	(12.5)	(13.5)	(8.8)	(49.1)	(100.0)	

FY 2015

	Space heating	Space cooling	Water heating	Cooking	Power, etc.	Total	Shares
Electricity	3.2	8.6	1.7	2.6	108.5	124.6	(59.4)
Gas	9.3	11.0	13.6	17.2	-	51.0	(24.3)
Oil	18.8	0.9	7.9	-	-	27.6	(13.1)
Coal	0.5	-	2.1	0.8	-	3.4	(1.6)
Heat	0.5	1.5	1.2	-	-	3.2	(1.5)
Total	32.4	22.0	26.4	20.5	108.5	209.9	(100.0)
Shares	(15.5)	(10.5)	(12.6)	(9.8)	(51.7)	(100.0)	

Notes:
- "Gas" includes town gas and liquefied petroleum gas (LP gas).
- "Thermal" includes geothermal and solar thermal.

Source: "2017 EDMC HANDBOOK of ENERGY & ECONOMIC STATISTICS in JAPAN," the Energy Data and Modelling Center (EDMC), the Institute of Energy Economics, Japan (IEEJ)

1.19 Transportation energy consumption (by mode)

(Unit : 10^{10}kcal)

	Passenger								Freight						Total transport	
	Total	Growth rates (%)	Private vehicle	Business Vehicle	Bus	Rail	Internal navigation	Domestic aviation	Total	Growth rates (%)	Vehicle	Rail	Internal navigation	Domestic aviation		Growth rates (%)
FY 1965	7,912	-	3,528	1,487	904	1,482	65	445	11,145	-	7,036	2,126	1,964	20	19,058	7.9
1970	15,927	14,5	10,353	1,949	1,188	1,374	106	956	18,346	10,4	12,821	1,216	4,243	66	34,273	12.3
1975	23,811	7,5	17,030	2,089	1,425	1,459	143	1,665	22,484	3.1	15,685	405	6,268	126	46,296	5.3
1980	29,737	0.9	22,536	1,869	1,331	1,511	129	2,360	25,264	-3.6	18,891	320	5,833	221	55,002	-1.2
1985	33,861	3.4	26,551	2,110	1,251	1,518	96	2,336	25,019	1.2	19,734	193	4,769	323	58,880	2.4
1990	44,304	6.5	35,623	2,381	1,463	1,837	160	2,840	30,081	1.6	25,894	160	3,613	414	74,386	4.5
1991	47,186	6.5	38,038	2,657	1,476	1,877	203	2,935	30,591	1.7	26,211	160	3,794	426	77,777	4.6
1992	48,836	3.5	39,741	2,494	1,478	1,893	188	3,041	30,646	0.2	26,398	164	3,644	440	79,482	2.3
1993	49,696	1.8	41,116	1,914	1,462	1,897	179	3,129	30,513	-0.4	26,214	156	3,675	468	80,209	0.9
1994	52,394	5.4	43,551	1,806	1,517	1,941	163	3,417	31,609	3.6	27,404	152	3,556	496	84,003	4.7
1995	54,192	3.4	45,168	1,735	1,505	1,947	140	3,697	32,448	2.7	27,977	154	3,794	523	86,640	3.1
1996	56,030	3.4	46,713	2,089	1,473	1,936	205	3,614	32,885	1.3	28,153	149	4,076	507	88,915	2.6
1997	57,478	2.6	47,930	2,300	1,468	1,952	209	3,619	32,753	-0.4	27,864	149	4,207	534	90,231	1.5
1998	58,490	1.8	48,973	2,252	1,446	1,962	181	3,676	32,771	0.1	27,235	146	4,849	541	91,261	1.1
1999	59,669	2.0	50,186	2,341	1,470	1,932	244	3,496	33,121	1.1	27,336	141	5,104	540	92,790	1.7
2000	58,079	-2.7	49,559	1,531	1,375	1,937	208	3,469	32,660	-1.4	26,673	139	5,279	570	90,739	-2.2
2001	58,896	1.4	49,929	1,582	1,392	1,928	212	3,853	32,097	-1.7	26,205	137	5,229	526	90,993	0.3
2002	58,849	-0.1	50,286	1,606	1,365	1,901	175	3,516	31,771	-1.0	25,790	135	5,325	521	90,620	-0.4
2003	58,796	-0.1	50,320	1,583	1,407	1,940	145	3,401	31,468	-1.0	25,636	137	5,148	547	90,264	-0.4
2004	59,530	1.2	50,681	1,499	1,499	1,921	179	3,751	31,761	0.9	26,207	136	4,869	550	91,291	1.1
2005	59,041	-0.8	49,925	1,494	1,503	2,007	172	3,940	30,944	-2.6	25,970	140	4,277	557	89,985	-1.4
2006	57,845	-2.0	48,537	1,483	1,533	1,983	155	4,154	31,042	0.3	26,377	138	3,957	572	88,887	-1.2
2007	56,762	-1.9	47,033	1,439	1,531	1,995	166	4,599	30,014	-3.3	25,835	134	3,457	588	86,777	-2.4
2008	54,787	-3.5	45,379	1,375	1,456	1,983	164	4,430	28,726	-4.3	24,928	132	3,120	546	83,513	-3.8
2009	54,266	-1.0	45,264	1,344	1,452	1,967	145	4,094	27,599	-3.9	24,100	126	2,835	538	81,865	-2.0
2010	54,826	1.0	45,780	1,284	1,623	1,987	144	4,007	27,836	0.9	24,418	124	2,784	511	82,661	1.0
2011	52,983	-3.4	45,022	1,207	1,544	1,882	146	3,183	27,737	0.4	24,432	120	2,686	498	80,720	-2.3
2012	51,937	-2.0	44,164	1,186	1,586	1,878	139	2,986	27,914	0.6	24,603	120	2,691	498	79,851	-1.1
2013	50,877	-2.0	42,107	1,152	1,647	1,960	145	3,865	28,416	1.8	25,262	126	2,508	521	79,294	-0.7
2014	48,964	-3.8	40,342	1,072	1,569	1,931	154	4,097	28,001	-1.5	24,735	126	2,417	521	76,966	-2.9
2015	49,238	0.6	40,277	1,006	1,589	1,959	144	4,263	27,821	-0.6	24,956	125	2,239	501	77,058	0.1

Source: "2017 EDMC HANDBOOK of ENERGY & ECONOMIC STATISTICS in JAPAN," the Energy Data and Modelling Center (EDMC), the Institute of Energy Economics, Japan (IEEJ)

1.20 Energy intensity by mode

	Passenger								Freight					
								(kcal / passenger- km)						(kcal / ton- km)
	Total	Growth rates (%)	Private vehicle	Business vehicle	Bus	Rail	Internal navigation	Domestic aviation	Total	Growth rates (%)	Vehicle	Rail	Internal navigation	Domestic aviation
FY 1965	191	-	561	1,651	113	58	167	1,507	649	-	2,057	376	243	9,519
1970	227	1.9	373	1,257	115	48	160	1,026	593	-0.5	1,347	194	281	8,951
1975	297	5.6	518	1,671	129	45	207	870	700	7.7	1,732	86	341	8,313
1980	335	0.4	544	1,433	121	48	211	795	657	-2.4	1,514	86	263	7,631
1985	340	-0.5	520	1,667	119	46	167	705	673	1.6	1,376	88	232	6,688
1990	342	4.0	490	1,896	133	47	255	550	652	-5.0	1,373	59	148	5,178
1991	355	3.9	511	2,061	136	47	328	530	649	-0.6	1,342	59	153	5,250
1992	362	1.8	519	1,985	139	47	309	537	653	0.7	1,362	62	147	5,469
1993	367	1.6	533	1,571	142	47	295	548	679	4.0	1,382	61	157	5,728
1994	386	5.1	556	1,561	152	49	273	558	689	1.5	1,405	62	149	5,694
1995	391	1.4	560	1,566	155	49	249	569	695	0.9	1,382	61	159	5,662
1996	399	1.9	567	1,959	155	48	363	523	689	-0.9	1,341	60	169	5,265
1997	406	1.8	571	2,234	158	49	391	494	693	0.6	1,325	60	177	5,440
1998	411	1.4	575	2,272	160	50	393	484	717	3.5	1,320	64	214	5,492
1999	420	2.0	587	2,406	166	50	546	441	714	-0.3	1,298	62	222	5,200
2000	410	-2.3	582	1,582	157	50	483	435	682	-4.6	1,245	63	218	5,301
2001	414	1.0	583	1,669	161	50	530	473	666	-2.2	1,225	62	214	5,296
2002	414	-0.1	587	1,680	158	50	450	419	673	1.0	1,210	61	226	5,259
2003	413	-0.2	588	1,648	163	50	360	408	682	1.2	1,167	60	236	5,323
2004	420	1.8	596	1,611	174	50	463	458	682	0.0	1,172	60	222	5,198
2005	419	-0.3	599	1,620	171	51	428	473	667	-2.1	1,137	61	202	5,179
2006	413	-1.5	594	1,612	173	50	411	484	663	-0.7	1,116	59	190	5,223
2007	402	-2.5	574	1,614	172	49	433	545	640	-3.5	1,069	57	170	5,125
2008	393	-2.3	563	1,620	162	49	468	547	642	0.3	1,055	59	166	5,059
2009	396	0.8	565	1,648	166	50	471	544	662	3.1	1,056	61	169	5,149
2010	407	2.7	584	1,647	189	51	479	543	620	-6.3	985	61	155	4,942
2011	396	-2.6	579	1,655	187	48	478	447	643	3.7	1,037	60	154	5,014
2012	377	-4.9	552	1,645	188	46	448	383	679	5.7	1,162	59	151	4,898
2013	369	-2.2	534	1,635	199	47	446	459	672	-1.1	1,170	60	136	4,735
2014	356	-3.4	515	1,547	195	47	516	472	671	-0.1	1,168	60	132	4,635
2015	356	0.0	516	1,545	199	46	N.A.	483	680	1.3	1,211	58	124	4,471

Source: "2017 EDMC HANDBOOK of ENERGY & ECONOMIC STATISTICS in JAPAN," the Energy Data and Modelling Center (EDMC), the Institute of Energy Economics, Japan (IEEJ)

1.21 Trends in proportion of power generation by energy source

（Unit：%）

	Thermal power	Hydroelectric generation and others	Nuclear power	Others
FY 1990	60.5	12.1	27.3	-
1991	59.3	12.9	27.8	-
1992	60.2	10.9	28.9	-
1993	55.3	12.7	32.0	-
1994	59.1	8.6	32.3	-
1995	55.5	10.5	34.0	-
1996	55.2	10.2	34.6	-
1997	53.2	11.2	35.6	-
1998	51.8	11.3	36.8	-
1999	55.2	10.3	34.5	-
2000	55.5	10.2	34.3	-
2001	55.2	10.2	34.6	-
2002	59.0	9.8	31.2	-
2003	63.1	11.3	25.7	-
2004	60.1	10.9	29.1	-
2005	60.1	9.1	30.8	-
2006	59.5	10.0	30.5	-
2007	65.9	8.6	25.6	-
2008	65.2	8.8	26.0	-
2009	61.4	9.4	29.2	-
2010	61.8	9.7	28.6	-
2011	78.9	10.4	10.7	-
2012	88.4	10.0	1.7	-
2013	88.4	10.7	1.0	-
2014	87.8	12.2	0.0	-
2015	82.9	14.9	0.8	1.5

Note:
FY1990 - FY2014: Generating end power of member companies of the Federation of Electric Power Companies of Japan. (including electric power the companies receive from others)
FY2015 - : Transmission end power of member companies of the Electricity Power Council for a Low Carbon Society.
Others indicate that energy source is unknown.

Source：The Council on Industrial Structure and the Federation

1.22 Trends in rate of utilization for nuclear power plants

	Rate of Utilization (%)
FY 1990	72.7
1991	73.8
1992	74.2
1993	75.4
1994	76.6
1995	80.2
1996	80.8
1997	81.3
1998	84.2
1999	80.1
2000	81.7
2001	80.5
2002	73.4
2003	59.7
2004	68.9
2005	71.9
2006	69.9
2007	60.7
2008	60.0
2009	65.7
2010	67.3
2011	23.7
2012	3.9
2013	2.3
2014	0.0
2015	2.5

Source: "Outline of Demand and Supply for Electric Power," by Electricity and Gas Industry Department, Agency for Natural Resources and Energy, Ministry of Economy, Trade and Industry.

"Report on Power Received and Generated by The Federation of Electric Power Companies of Japan"

1.23 Trend in CO_2 emissions per unit of user-end electricity

	CO_2 emissions intensity ($kgCO_2$ / kWh)
FY 1990	0.417
1991	0.408
1992	0.416
1993	0.386
1994	0.412
1995	0.389
1996	0.382
1997	0.366
1998	0.354
1999	0.373
2000	0.376
2001	0.376
2002	0.404
2003	0.433
2004	0.418
2005	0.423
2006	0.410
2007	0.453
2008	0.444(0.373) *
2009	0.412(0.351) *
2010	0.413(0.350) *
2011	0.510(0.476) *
2012	0.571(0.487) *
2013	0.570
2014	0.556[0.553]*
2015	0.534

Note:
FY1990 - FY2014: CO2 emissions intensity of member companies of the Federation of Electric Power Companies of Japan. (including electric power the companies receive from other companies)
FY2015 - : CO2 emissions intensity of member companies of the Electricity Power Council for a Low Carbon Society.
・Parenthesized figures are the values reflecting Kyoto Mechanisms Credit.
・Bracketed figures are CO2 emissions intensity of member companies of the Electricity Power Council for a Low Carbon a Low Carbon Society in FY2014.

Source: The Council on Industrial Structure

1.24 New energy supply

	New energy supply (10^{10}kcal)			Growth rates (%)		
	Solar heat	Geothermal	Waste	Solar heat	Geothermal	Waste
FY 1965	-	-	5	-	-	0.0
1970	-	66	10	-	20.0	11.1
1975	136	96	34	-	29.7	17.2
1980	370	290	107	73.7	3.9	40.8
1985	878	398	227	8.5	6.4	8.1
1990	1,167	465	407	13.3	26.4	19.0
1991	1,129	506	437	-3.3	8.8	7.4
1992	1,077	510	465	-4.6	0.8	6.4
1993	1,051	504	491	-2.4	-1.2	5.6
1994	1,031	589	516	-1.9	16.9	5.1
1995	1,006	922	631	-2.4	56.5	22.3
1996	958	1,071	756	-4.8	16.2	19.8
1997	958	1,097	896	0.0	2.4	18.5
1998	845	1,031	1,007	-11.8	-6.0	12.4
1999	768	1,008	1,047	-9.1	-2.2	4.0
2000	808	964	1,012	5.2	-4.4	-3.3
2001	747	999	1,148	-7.5	3.6	13.4
2002	684	990	1,303	-8.4	-0.9	13.5
2003	635	1,017	1,482	-7.2	2.7	13.7
2004	600	984	1,470	-5.5	-3.2	-0.8
2005	569	943	1,431	-5.2	-4.2	-2.7
2006	540	899	1,451	-5.1	-4.7	1.4
2007	513	889	1,440	-5.0	-1.1	-0.8
2008	489	802	1,400	-4.7	-9.8	-2.8
2009	444	843	1,388	-9.2	5.1	-0.9
2010	411	769	1,455	-7.4	-8.8	4.8
2011	376	783	1,511	-8.5	1.8	3.8
2012	348	764	1,564	-7.4	-2.4	3.5
2013	317	759	1,585	-8.9	-0.7	1.3
2014	290	753	1,583	-8.5	-0.8	-0.1
2015	267	745	1,594	-7.9	-1.1	0.7

Source: "2017 EDMC HANDBOOK of ENERGY & ECONOMIC STATISTICS in JAPAN," the Energy Data and Modelling Center (EDMC), the Institute of Energy Economics, Japan (IEEJ)

1.25 Installed capacity and utilization of new energy

	Power						Heat					Total	Share in TPES
	Photovoltaics		Wind		Waste+ biomass		Biomass	Solar	Waste	Unutilized energy*	Black liquor and waste wood		
	10,000 KL	10,000 KW	10,000 KL	10,000 KW	10,000 KL	10,000 KW	10,000 KL	10,000 KL	10,000 KL	10,000 KL	10,000 KL	10,000 KL	
FY 1990	0.3	-	0.04	0.1	44	-	N.A.	132	2.7	0.8	477	657	1.2%
1991	0.4	-	0.1	0.3	47	-	N.A.	135	3.2	1.1	490	677	1.3%
1992	0.5	-	0.1	0.3	50	-	N.A.	136	3.6	1.3	478	670	1.2%
1993	0.6	-	0.2	0.5	53	-	N.A.	137	3.6	1.4	462	658	1.2%
1994	0.8	-	0.3	0.5	66	54	N.A.	138	3.5	2.4	449	660	1.1%
1995	1.1	-	0.4	1.0	81	65	N.A.	135	3.8	3.0	472	696	1.2%
1996	1.5	-	0.6	1.4	91	76	N.A.	130	4.4	3.3	477	708	1.2%
1997	2.3	-	0.9	2.2	101	82	N.A.	122	4.6	3.7	493	728	1.2%
1998	3.4	-	1.6	3.8	114	93	N.A.	110	4.4	4.1	457	695	1.2%
1999	5.3	20.9	3.5	8.3	120	98	N.A.	98	4.4	4.1	457	693	1.2%
2000	8.1	33.0	5.9	14.4	120	110	N.A.	89	4.5	4.5	490	722	1.2%
2001	11.0	45.2	12.7	31.2	130	118	N.A.	82	4.5	4.4	446	690	1.2%
2002	15.6	63.7	18.9	46.3	175	162	68.0	74	164.0	4.6	471	991	1.7%
2003	21.0	86.0	27.6	67.8	214	174	79.0	69	161.0	4.2	478	1,054	1.8%
2004	27.7	113.2	37.8	92.7	227	201	122.0	65	165.0	4.6	470	1,119	N.A.
2005	34.7	142.2	44.2	108.5	252	215	142.0	61	149.0	4.9	470	1,159	N.A.
2006	41.8	170.9	60.7	149.1	291	210	156.3	58	150.1	4.7	499	1,262	N.A.
2007	46.9	191.9	68.2	167.5	269	216	197.8	55	151.8	5.0	499	1,293	N.A.
2008	52.4	214.4	75.3	185.0	314	237	175.3	51	148.1	4.6	486	1,307	N.A.
2009	64.2	262.7	89.0	218.6	312	237	170.9	48	146.9	4.5	447	1,282	N.A.
2010	88.4	361.8	99.4	244.2	327	240	173.7	44	137.8	4.7	492	1,368	N.A.
2011	120.0	491.0	104.1	255.5	333	243	178.5	41	136.4	4.2	464	1,381	N.A.
2012	168.4	689.0	107.6	264.0	335	244	N.A.	N.A.	N.A.	N.A.	N.A.	N.A.	N.A.
2013	340.4	1,393.0	108.8	267.0	347	253	N.A.	N.A.	N.A.	N.A.	N.A.	N.A.	N.A.
2014	569.9	2,332.0	117.8	289.1	361	263	N.A.	N.A.	N.A.	N.A.	N.A.	N.A.	N.A.
2015	793.8	3,248.0	124.0	304.4	401	293	N.A.	N.A.	N.A.	N.A.	N.A.	N.A.	N.A.

Notes:
- * Includes Snow/ice heat energy thermal utilization.
- Data in FY2012 and onward are estimated by EDMC.

Source: "2017 EDMC HANDBOOK of ENERGY & ECONOMIC STATISTICS in JAPAN," the Energy Data and Modelling Center (EDMC), the Institute of Energy Economics, Japan (IEEJ)

1.26 Energy balance by country and region (production amount, consumption amount)

(Unit: PJ)

Country (region)	Production of primary energy						Final energy consumption					
								Energy-use				
	Total	Solid	Liquid	Gas	Electric power	Thermal	Total	Non-energy use	Industry	Transport -ation	Other	Consumption per capita (PJ)
World	**567,050**	**220,840**	**177,770**	**122,003**	**16,460**	**29,977**	**370,796**	**33,866**	**117,270**	**91,640**	**128,020**	52
Asia												
Japan	1,172	470	22	114	351	215	**13,095**	1,621	3,463	3,064	4,948	103
UAE	8,792	-	6,874	1,918	-	-	*** 2,418**	* 93	* 1,441	537	347	* 267
Iraq	6,522	2	6,249	250	21	-	**1,064**	40	178	490	356	31
Iran	12,544	114	6,794	5,533	54	49	**7,533**	1,100	* 1,728	1,829	2,875	98
India	22,401	18,384	1,789	1,216	643	370	**24,045**	1,524	9,630	3,101	* 9,790	19
Indonesia	19,754	15,092	1,725	2,537	61	339	**7,077**	244	2,510	1,718	* 2,606	28
Uzbekistan	2,267	59	132	2,033	42	-	**1,270**	66	281	113	810	44
Oman	3,151	0	1,965	1,186	-	-	**757**	89	397	172	99	194
Kazakhstan	7,198	2,198	3,483	1,489	28	-	**1,804**	34	1,023	208	538	105
Qatar	9,271	0	3,252	6,019	-	-	**667**	181	247	161	78	317
Republic of Kore	1,799	206	31	27	27	1,508	**7,080**	1,878	2,002	1,315	1,884	142
North Korea	1,009	960	-	-	49	-	**534**	-	342	18	173	21
Kuwait	7,113	0	6,555	558	-	-	**642**	118	192	180	152	179
Saudi Arabia	25,573	-	22,770	2,803	0	-	**5,525**	1,056	1,932	1,728	809	183
Thailand	3,036	1,151	642	1,217	26	0	**3,512**	464	1,187	957	905	**52**
China	108,185	89,757	9,195	4,186	3,841	1,205	**74,832**	6,811	40,360	9,196	18,465	55
Turkmenistan	3,210	0	535	2,675	-	-	**741**	-	94	139	508	141
Turkey	1,352	837	103	27	241	144	**3,566**	298	994	812	1,461	47
Pakistan	2,009	607	160	1,079	112	51	**2,326**	117	696	544	970	**13**
Philippines	935	394	36	123	36	346	**1,158**	19	264	385	490	12
Vietnam	2,887	1,604	720	353	210	-	**2,093**	6	804	440	842	23
Malaysia	3,529	117	1,240	2,133	39	-	**2,109**	349	547	834	379	72
North America												
USA	78,449	22,596	20,525	24,067	1,639	9,621	**63,112**	4,906	10,945	25,994	21,267	199
Canada	17,868	1,958	7,878	5,467	1,453	1,112	**8,353**	986	2,002	2,591	2,773	237
Trinidad and Tobago	1,673	0	229	1,444	-	-	**564**	404	94	45	22	418
Mexico	8,849	694	5,988	1,697	116	353	**4,934**	227	1,458	2,130	1,119	40
South America												
Argentina	2,981	96	1,393	1,304	120	67	**2,436**	206	686	648	896	57
Colombia	5,700	2,654	2,414	469	162	-	**1,054**	15	266	402	372	22
Chile	626	495	21	35	73	2	**1,112**	26	417	338	330	63
Brazil	10,360	2,961	5,091	709	1,431	167	**9,966**	648	3,623	3,715	1,979	49
Venezuela	7,716	74	6,522	820	301	-	**1,876**	* 82	905	596	293	62
Peru	982	148	307	444	80	2	**735**	16	197	281	241	24
Europe												
UK	4,557	463	1,744	1,453	127	771	**5,434**	269	979	1,663	2,524	85
Italy a	1,542	396	266	341	321	217	**5,104**	267	1,097	1,517	2,222	85
Ukraine	3,578	1,771	134	671	54	947	**2,959**	207	927	498	1,328	66
Austria	507	232	46	55	165	9	**1,177**	77	336	354	410	139
Netherlands	2,908	107	145	2,599	23	33	**2,596**	644	516	472	964	154
Greece	390	318	9	4	51	9	**643**	27	120	238	258	58
Switzerland b	539	97	0	4	141	298	**854**	22	158	253	421	105
Sweden	1,450	452	17	6	256	718	**1,367**	87	463	323	494	142
Spain	1,508	415	52	14	356	671	**3,525**	212	876	1,199	1,238	76
Serbia	473	367	51	18	37	0	**359**	23	98	81	157	40
Czech Republic	1,258	853	19	33	19	335	**1,066**	107	284	244	431	101
Germany	5,032	2,637	274	659	381	1,081	**9,486**	918	2,302	2,321	3,944	118
Norway	8,133	111	3,547	4,004	469	1	**860**	98	242	203	317	169
Hungary	426	132	50	68	3	172	**696**	77	142	151	326	70
Finland	755	429	15	2	49	259	**927**	47	330	180	370	170
France c	5,659	564	146	30	330	4,589	**6,705**	572	1,177	1,856	3,099	105
Bulgaria	443	248	3	9	25	158	**380**	20	108	111	142	52
Belarus	167	88	71	8	1	-	**830**	94	192	184	361	87
Belgium	619	101	18	8	24	468	**1,762**	396	396	359	612	158
Poland	2,969	2,699	69	168	30	2	**2,799**	214	609	664	1,313	**72**
Portugal	241	122	11	3	94	10	**696**	58	194	230	214	67
Romania	1,090	350	181	361	72	127	**955**	63	247	218	426	48
Russia	56,266	8,020	22,113	23,583	652	1,897	**18,284**	2,924	5,201	3,940	6,219	128
Africa												
Algeria	5,676	1	2,789	2,885	1	-	**1,327**	109	223	521	475	35
Egypt	3,445	219	1,464	1,709	53	-	**2,547**	*317	856	426	948	29
Tunis	298	40	134	118	2	5	**304**	8	88	86	124	28
Nigeria	10,668	4,560	4,817	1,271	19	-	*** 4,896**	47	* 411	341	* 4,098	* 28
South Africa	6,999	6,783	12	43	5	156	**3,108**	158	1,135	792	1,023	58
Morocco	82	63	0	3	15	-	**603**	17	129	205	251	18
Libya	2,554	7	2,191	356	-	-	**516**	76	27	303	109	82
Oceania												
Australia	14,368	11,234	819	2,196	106	13	**3,370**	196	1,043	1,305	826	145
New Zealand	739	160	76	171	90	242	**555**	49	173	192	141	124

Notes:

* indicates provisional or estimated values.

a: Including San Marino and Vatican City.

b: Including Liechtenstein.

c: Including Monaco.

Source: "World Statistics 2017," Ministry of Internal Affairs and Communications

1.27 Consumption of coal, oil, natural gas and electric power

Country (region)	Coal (excluding lignite)		Crude oil		Natural gas		Electric power	
	Consumption (1,000t)	Consumption per person (kg)	Consumption (1,000t)	Consumption per person (kg)	consumption (Trillion J)	Consumption per person (Million J)	Consumption (Million kWh)	Consumption per person (kWh)
World	**6,823,128**	**950**	**3,752,439**	**523**	**134,423,641**	**18,718**	**23,430,761**	**3,263**
Asia								
Japan	195,607	1,540	167,602	1,320	5,019,550	39,529	1,045,293	8,232
Azerbaijan	5	1	6,511	686	404,896	42,632	22,986	2,420
UAE	2,649	293	4,781	529	2,584,165	285,860	109,956	12,163
Yemen	185	7	3,323	130	41,692	1,633	8,501	333
Israel	11,551	1,478	11,830	1,513	267,050	34,159	55,264	7,069
Iraq	-	-	28,874	847	277,522	8,137	82,802	2,428
Iran	847	11	90,398	1,172	5,995,460	77,709	254,555	3,299
India	739,553	578	226,323	177	2,069,444	1,617	1,199,078	937
Indonesia	33,787	134	40,829	162	1,316,334	5,239	219,216	872
Uzbekistan	56	2	2,997	103	1,747,819	60,200	54,292	1,870
Oman	-	-	5,654	1,447	923,486	236,373	26,240	6,716
Kazakhstan	79,742	4,663	19,982	1,169	1,408,743	82,385	94,519	5,528
Qatar	-	-	6,093	2,900	1,404,400	668,352	34,668	16,498
Korea	126,119	2,530	123,691	2,481	2,217,299	44,482	541,996	10,873
South Korea	15,100	607	535	21	-	-	19,524	784
Kuwait	-	-	45,464	12,651	702,658	195,526	60,982	16,969
Saudi Arabia	-	-	105,947	3,508	3,114,266	103,118	284,017	9,404
Syria	-	-	5,457	282	213,005	11,024	25,404	1,315
Singapore	427	79	46,441	8,592	413,405	76,485	47,964	8,874
Thailand	18,531	275	52,310	776	1,760,864	26,106	176,997	2,624
China	a 4,250,148	a 3,119	486,709	357	6,507,611	4,776	5,420,406	3,978
Turkmenistan	-	-	8,091	1,544	941,297	179,634	16,020	3,057
Turkey	28,178	370	20,871	274	1,747,095	22,921	246,356	3,232
Bahrain	-	-	13,308	9,862	541,345	401,167	25,933	19,218
Pakistan	5,984	33	11,101	61	1,198,823	6,616	98,184	542
Bangladesh	1,960	12	1,301	8	881,823	5,611	53,043	338
Philippines	-	-	7,692	79	136,949	1,404	75,300	772
Brunei	-	-	274	666	114,336	277,852	4,402	10,697
Vietnam	26,494	290	9,619	105	391,953	4,289	128,589	1,407
Hong Kong	12,346	1,723	-	-	96,693	13,497	47,382	6,614
Malaysia	24,270	824	26,494	899	1,531,074	51,962	138,529	4,701
Myanmar	582	11	599	11	85,404	1,612	12,247	231
North America								
USA	365,439	1,152	745,480	2,351	28,489,677	89,834	4,365,162	13,764
Canada	6,021	171	60,150	1,707	4,049,103	114,931	601,916	17,085
Cuba	*3	0	*8,928	*786	41,596	3,661	19,140	1,684
Guatemala	497	32	60	4	-	-	9,470	604
Costa Rica	3	1	3	1	-	-	12,290	2,611
Jamaica	89	32	1,167	421	-	-	4,256	1,535
Dominican Republic	850	83	1,367	133	-	3,837	18,799	1,828
Trinidad and Tobago	-	-	6,817	5,056	834,846	619,212	9,505	7,050
Mexico	3,254	26	67,166	543	2,888,257	23,341	297,049	2,401
South America								
Argentina	890	21	26,055	613	1,844,997	43,373	148,919	3,501
Uruguay	3	1	2,085	612	2,294	673	11,451	3,360
Ecuador	-	-	8,362	534	26,822	1,713	23,892	1,526
Colombia	6,737	142	17,839	377	469,687	9,921	70,050	1,480
Chile	11,327	644	9,406	535	188,997	10,753	73,065	4,157
Brazil	26,101	128	93,636	458	1,444,868	7,074	611,170	2,992
Venezuela	288	10	48,706	1,609	986,130	32,571	123,875	4,092
Peru	1,209	40	6,471	212	241,169	7,890	43,330	1,418
Europe								
Ireland	2,134	457	2,838	608	179,933	38,519	28,242	6,046
UK	60,358	944	58,477	914	3,055,597	47,777	373,585	5,841
Italy b	20,576	344	62,685	1,048	2,669,630	44,641	331,945	5,551
Ukraine	71,322	1,579	2,900	64	1,835,464	40,639	184,487	4,085
Austria	3,491	411	8,566	1,009	326,185	38,434	75,573	8,905
Netherlands	12,979	772	47,849	2,847	1,546,149	91,983	119,111	7,086
Greece	302	27	19,856	1,796	150,552	13,618	59,039	5,340
Switzerland c	154	19	4,846	594	143,874	17,641	67,916	8,327
Sweden	2,832	294	16,494	1,714	44,440	4,618	143,164	14,875
Spain	18,937	408	58,154	1,252	1,217,097	26,199	276,815	5,959
Slovakia	3,917	723	5,791	1,069	223,968	41,328	28,923	5,337
Serbia	103	12	2,748	307	86,832	9,715	37,340	4,178
Czech Republic	7,057	669	6,664	632	323,147	30,644	70,178	6,655
Denmark	5,344	950	7,156	1,272	154,259	27,427	35,831	6,371
Germany	62,744	779	92,614	1,150	3,400,715	42,210	600,965	7,459
Norway	724	142	15,438	3,037	266,816	52,487	129,207	25,417
Hungary	1,332	134	5,968	601	353,581	35,627	42,150	4,247
Finland	5,836	1,070	11,071	2,030	133,027	24,395	86,966	15,948
France d	18,329	287	55,615	871	1,814,662	28,406	524,056	8,203
Bulgaria	1,759	243	5,623	775	111,086	15,317	37,603	5,185
Belarus	543	57	21,182	2,230	795,073	83,716	37,877	3,988
Belgium	4,997	448	27,627	2,477	669,671	60,043	93,096	8,347
Poland	78,783	2,040	24,203	627	638,527	16,534	160,036	4,144
Portugal	4,448	425	11,912	1,139	174,723	16,704	54,448	5,205
Romania	224	11	9,293	469	455,613	23,018	56,871	2,873
Russia	137,135	957	262,355	1,830	18,382,870	128,222	1,045,416	7,292
Africa								
Algeria	-	-	21,481	563	1,330,452	34,841	59,801	1,566
Angola	-	-	2,268	97	15,504	661	5,995	256
Egypt	419	5	24,012	274	1,837,665	20,975	167,651	1,914
Ghana	-	-	1,303	50	12,211	467	12,544	479
Cameroon	-	-	2,372	107	17,816	802	6,849	308
Kenya	379	9	549	13	-	-	8,461	194
Côte d'Ivoire	-	-	3,731	173	74,403	3,441	6,930	320
Republic of the Cong	-	-	0	0	331	5	8,627	119
Zambia	223	15	627	41	-	-	*12308	*807
Zimbabwe	3,935	264	-	-	-	-	10,589	711
Sudan	-	-	4,009	104	-	-	10,607	275
Tanzania	85	2	-	-	37,964	756	5,633	112
Tunisia	0	0	1,750	159	246,465	22,394	18,326	1,665
Nigeria	44	0	5,088	29	548,946	3,176	28,961	168
South Africa	181,879	3,405	23,370	438	190,389	3,564	251,572	4,710
Mozambique	15	1	0	0	7,262	274	14,926	564
Morocco	4,547	134	5,548	163	48,141	1,416	33,534	986
Libya	-	-	7,314	1,167	178,600	28,503	30,346	4,843
Oceania								
Australia	31,065	1,335	29,220	1,256	1,382,893	59,427	249,060	10,703
New Zealand	405	91	5,231	1,171	185,131	41,460	43,256	9,687
Papua New Guinea	-	-	1,280	175	5,317	728	*4,176	*571

Notes:
* Indicates provisional or estimated values.
a. Including lignite.
b. Including San Marino and Vatican city.
c. Including Liechtenstein.
d. Including Monaco.

Source: "World Statistics 2017," Ministry of Internal Affairs and Communications

1.28 World new energy supply

	Wind power generation (cumulative installed wind turbine capacity at the year-end, million kW)				Solar photovoltaic (cumulative photovoltaic power capacity at the year-end, million kW)			
	2000	2005	2010	2015	2000	2005	2010	2015
North America	275.2	986.7	4,505.4	8,915.4	4.0	22.6	235.2	2,836.3
USA	261.0	918.1	4,027.4	7,474.0	1.9	19.0	204.0	2,557.7
Canada	13.9	68.3	401.1	1,119.0	0.7	1.7	28.1	250.4
Mexico	0.3	0.3	76.9	322.4	1.4	1.9	3.1	28.2
Latin America	9.6	19.3	160.6	1,304.9	-	-	-	84.8
Brazil	2.2	2.9	93.1	871.5	N.A.	N.A.	N.A.	N.A.
Europe	1,313.3	4,088.2	8,602.3	14,808.2	18.9	233.5	3,099.8	9,689.3
UK	42.5	133.6	540.1	1,419.1	0.2	1.1	9.5	907.1
Germany	609.7	1,837.5	2,709.2	4,501.8	11.4	205.6	1,794.4	3,969.8
France	6.3	77.5	594.0	1,026.9	1.1	2.6	120.7	655.7
Italy	42.4	171.3	581.4	912.6	1.9	3.8	350.2	1,892.2
Spain	235.8	1,001.3	1,971.5	2,302.5	0.2	5.5	433.0	543.2
Russia	N.A.	N.A.	N.A.	N.A.	N.A.	N.A.	N.A.	N.A.
Turkey	1.9	2.0	132.0	450.3	0.0	0.2	0.6	26.6
Africa	13.7	27.8	111.3	351.4	-	-	4.0	112.0
Middle East	1.8	3.0	10.1	27.4	0.1	1.8	17.7	506.2
Asia/Oceania	179.8	792.2	6,376.6	18,065.0	38.2	158.9	577.1	8,989.4
China	35.2	126.4	4,478.1	14,510.9	1.9	6.8	80.0	4,348.0
Japan	14.2	115.9	242.9	308.4	33.0	142.2	361.8	3,540.9
South Korea	0.6	8.9	34.2	77.8	0.4	1.4	65.6	340.8
Indonesia	N.A.	N.A.	N.A.	N.A.	N.A.	N.A.	N.A.	N.A.
Malaysia	N.A.	N.A.	N.A.	N.A.	-	-	1.3	23.1
Philippines	-	-	-	21.6	N.A.	N.A.	N.A.	N.A.
Thailand	-	-	0.1	22.3	-	2.4	4.9	142.0
India	122.0	443.0	1,306.5	2,508.8	-	0.1	7.0	88.1
Australia	3.0	71.7	208.4	443.6	2.9	6.1	57.1	506.5
New Zealand	3.5	16.7	49.5	69.0	N.A.	N.A.	N.A.	N.A.
World	1,793.4	5,917.1	19,766.3	43,472.2	131.3	508.3	4,134.6	23,060.6

	Geothermal power generation (cumulative geothermal power capacity at the year-end、million kW)				Biomass power generation (annual production, million t oil equivalent)			
	2000	2005	2010	2014	2000	2005	2010	2014
North America	367.1	385.2	427.2	448.3	310.5	761.2	2,632.2	3,209.5
USA	282.8	289.3	330.8	359.6	300.0	747.8	2,556.8	3,098.3
Canada	N.A.	N.A.	N.A.	N.A.	10.5	13.3	74.1	105.9
Mexico	84.3	96.0	96.5	88.7	-	-	1.3	5.3
Latin America	40.2	42.4	51.0	62.0	526.2	804.3	1,785.9	2,086.7
Brazil	N.A.	N.A.	N.A.	N.A.	522.6	783.5	1,544.0	1,763.6
Europe	102.1	112.4	168.8	236.0	72.3	315.6	1,129.1	1,372.6
UK	N.A.	N.A.	N.A.	N.A.	-	3.9	30.4	35.9
Germany	-	0.0	0.8	2.7	18.9	152.5	288.8	313.0
France	0.4	1.5	1.6	1.7	31.6	43.9	226.9	259.2
Italy	78.5	79.1	88.3	91.6	7.0	34.0	67.0	62.1
Spain	-	-	-	-	7.0	28.2	126.7	100.5
Russia	2.3	7.9	8.2	8.2	N.A.	N.A.	N.A.	N.A.
Turkey	2.0	2.0	9.4	62.4	N.A.	N.A.	N.A.	N.A.
Africa	5.2	17.4	21.6	61.2	0.6	0.6	3.2	6.9
Middle East	N.A.	N.A.	N.A.	N.A.	-	-	0.4	0.4
Asia/Oceania	344.9	382.1	446.6	492.0	8.2	83.4	409.7	808.6
China	2.8	2.8	2.4	2.7	-	62.2	147.9	243.0
Japan	53.5	53.4	50.2	54.4	N.A.	N.A.	N.A.	N.A.
South Korea	N.A.	N.A.	N.A.	N.A.	-	0.9	49.1	37.5
Indonesia	59.0	85.0	119.3	140.1	-	0.9	71.8	134.4
Malaysia	N.A.	N.A.	N.A.	N.A.	N.A.	N.A.	N.A.	N.A.
Philippines	193.1	197.8	196.6	191.7	N.A.	N.A.	N.A.	N.A.
Thailand	0.0	0.0	0.0	0.0	-	5.2	66.1	150.8
India	N.A.	N.A.	N.A.	N.A.	8.2	11.4	11.3	36.2
Australia	0.0	0.0	0.1	0.2	-	2.0	20.0	20.5
New Zealand	36.5	42.5	72.3	97.1	N.A.	N.A.	N.A.	N.A.
World	859.4	939.6	1,115.2	1,259.4	-	-	-	-

Notes:
- Geographical grouping is based on BP statistics.
- Biomass power generation includes ethanol fuel and biodiesel fuel.

Source: "2017 EDMC HANDBOOK of ENERGY & ECONOMIC STATISTICS in JAPAN," the Energy Data and Modelling Center (EDMC), the Institute of Energy Economics, Japan (IEEJ)

1.29 Production quantity of marine products (by species) (1)

(Unit: t)

Country (region)	Year	Marine products							
		Marine products Total	Aquaculture	Catching and gathering					
				Marine fishes / Crustaceans / Molluscs total	Marine fishes/crustaceans,/molluscs				
					Marine fishes				
					Salmons, trouts, smelts	Flounders, halibuts, soles	Cods, hakes, haddocks	Herrings, sardines, anchovies	Tunas, bonitos, billfishes
World	**14**	**195,720,438**	**101,090,691**	**93,445,234**	**948,230**	**1,042,230**	**8,652,019**	**15,216,439**	**7,660,220**
Asia									
Japan	**14**	4,772,866	1,020,400	3,660,966	166,432	52,919	254,034	590,415	448,717
Iran	**14**	947,354	320,174	627,180	17	3,555	...	68,684	249,089
India	**14**	9,602,842	4,884,021	4,718,821	...	55,806	6,897	633,805	189,375
Indonesia	**14**	20,838,117	14,330,888	6,436,715	...	27,830	...	504,957	1,386,317
South Korea	**14**	3,304,772	1,567,442	1,727,643	431	24,949	26,704	254,545	361,365
Cambodia	**14**	745,310	120,055	625,255	...	...	...	…	…
North Korea	**14**	734,450	508,450	226,000	...	4,200	65,600	…	…
Sri Lanka	**14**	569,270	34,220	535,050	...	...	...	132,829	133,128
Thailand	**14**	2,704,304	934,758	1,769,546	...	7,358	...	218,981	43,394
Taiwan	**14**	1,408,972	340,567	1,068,278	...	573	...	2,406	402,626
China	**14**	76,147,372	58,795,275	17,106,547	...	...	2	1,096,059	598,126
Turkey	**14**	536,516	234,302	302,214	431	615	10,209	156,165	20,887
Pakistan	**14**	623,457	148,381	475,076	...	1,090	...	57,154	59,238
Bangladesh	**14**	3,548,115	1,956,925	1,591,190	...	...	...	…	3,903
Philippines	**14**	4,688,858	2,337,605	2,350,886	...	657	...	433,712	583,419
Vietnam	**14**	6,330,591	3,411,391	2,919,200	...	...	...	…	82,664
Malaysia	**14**	1,985,085	521,014	1,464,071	...	6,481	...	68,576	85,750
Myanmar	**14**	5,047,526	964,256	4,083,270	...	...	...	…	11,200
North/South America									
USA	**14**	5,410,190	425,870	4,975,947	331,542	334,220	2,034,539	745,244	327,350
Argentina	**14**	833,943	4,008	829,935	...	5,830	333,692	14,426	264
Ecuador	**14**	1,031,747	368,207	663,540	...	1,580	13,683	42,865	328,588
Canada	**14**	1,010,508	133,783	862,365	43,852	47,860	88,716	137,787	7,163
Chile	**14**	3,820,176	1,227,359	2,175,486	...	18	82,083	1,396,779	5,895
Brazil	**14**	1,329,559	562,533	767,026	...	2,804	7,842	85,489	51,636
Peru	**14**	3,714,469	115,271	3,573,371	329	141	63,940	2,326,605	68,774
Mexico	**14**	1,722,607	194,230	1,519,893	295	5,307	10,422	594,719	170,303
Europe									
Iceland	**14**	1,103,629	8,433	1,076,769	211	19,235	522,392	157,895	32
UK	**14**	960,307	204,617	755,690	299	32,641	139,939	107,275	775
Italy	**14**	344,574	162,550	180,824	650	3,134	10,748	58,054	8,607
Netherlands	**14**	430,176	60,290	369,886	819	45,279	41,936	158,059	66
Spain	**14**	1,393,930	282,242	1,109,537	1,852	11,894	179,054	92,120	362,204
Denmark	**14**	784,545	39,399	745,146	251	28,490	97,763	326,940	…
Norway	**14**	3,788,336	1,332,497	2,301,609	540	17,750	1,177,295	418,149	…
France	**14**	784,231	204,300	521,419	1,001	20,111	111,579	62,993	138,365
Russia	**14**	4,396,226	163,600	4,225,556	380,523	118,184	2,347,567	550,670	1,168
Africa									
Egypt	**14**	1,481,882	1,137,091	344,791	...	2,337	...	21,741	1,816
Ghana	**14**	331,534	38,545	292,989	...	951	...	32,278	80,444
Senegal	**14**	459,792	1,012	458,713	...	6,325	346	223,076	11,330
Nigeria	**14**	1,073,059	313,231	759,828	...	20,985	2,673	118,815	1,013
South Africa	**14**	615,673	6,160	596,302	...	212	144,069	371,450	6,813
Morocco	**14**	1,369,026	1,189	1,365,149	...	7,427	8,383	921,033	9,121
Oceania									
New Zealand	**14**	552,505	109,874	442,097	...	2,601	198,151	326	25,028

1.29 Production quantity of marine products (by species) (2)

(Unit: t)

Country (region)	Year	Marine products				
		Catching and gathering				
		Marine fishes/crustaceans/molluscs				Aquatic plants
		Crustaceans		Molluscs	Others	
		Crabs, sea-spiders etc.	Shrimps and prawns etc.	Squids, cuttlefishes, octopuses		
World	**14**	**1,679,627**	**3,897,191**	**4,779,091**	**49,570,187**	**1,184,513**
Asia						
Japan	14	30,838	16,727	245,906	1,855,433	91,500
Iran	14	1,860	8,609	6,177	289,189	…
India	14	54,774	393,981	80,225	3,303,958	…
Indonesia	14	86,692	277,842	174,608	3,978,469	70,514
South Korea	14	71,859	29,717	355,114	602,959	9,687
Cambodia	14	4,430	9,200	5,800	605,825	…
North Korea	14	…	…	11,500	144,700	…
Sri Lanka	14	…	…	4,140	264,953	…
Thailand	14	32,967	48,414	123,738	1,294,694	…
Taiwan	14	9,557	19,339	212,921	420,856	127
China	14	864,674	1,238,229	1,382,238	11,927,219	245,550
Turkey	14	6	4,420	1,361	108,120	…
Pakistan	14	5,879	19,620	9,762	322,333	…
Bangladesh	14	…	…	…	1,587,287	…
Philippines	14	29,888	41,190	61,252	1,200,768	367
Vietnam	14	30,203	383,597	314,675	2,108,061	…
Malaysia	14	13,489	108,440	88,856	1,092,479	…
Myanmar	14	…	53,800	…	4,018,270	…
North/South America						
USA	14	126,353	203,188	125,362	748,149	8,373
Argentina	14	27	127,323	168,845	179,528	…
Ecuador	14	1,561	9,304	18,146	247,813	…
Canada	14	105,242	224,580	66	207,099	14,360
Chile	14	5,844	4,758	178,905	501,204	417,331
Brazil	14	11,015	44,721	3,349	560,170	…
Peru	14	1,954	29,168	626,948	455,512	25,827
Mexico	14	35,406	75,555	74,588	553,298	8,484
Europe						
Iceland	14	…	9,559	57	367,389	18,427
UK	14	35,003	34,492	10,608	394,658	…
Italy	14	194	13,059	17,256	69,122	1,200
Netherlands	14	588	24,809	264	98,066	…
Spain	14	5,908	9,756	63,463	383,286	2,151
Denmark	14	293	12,488	36	278,885	…
Norway	14	6,515	16,232	6	665,122	154,230
France	14	11,501	4,651	15,697	155,521	58,512
Russia	14	36,236	12,124	111,099	667,985	7,070
Africa						
Egypt	14	2,498	10,210	2,781	303,408	…
Ghana	14	191	1,141	3,869	174,115	…
Senegal	14	482	7,073	8,242	201,839	67
Nigeria	14	4,656	29,487	498	581,701	…
South Africa	14	11	2,531	7,058	64,158	13,211
Morocco	14	551	9,942	78,978	329,714	2,688
Oceania						
New Zealand	14	301	3,579	15,171	196,940	534

Source: "World Statistics 2017," Ministry of Internal Affairs and Communications

2.01 Trends in emission amounts of greenhouse gasses in Japan

（Unit: million t-CO2）

	Carbon dioxide（CO2）	Methane（CH4）	Nitrous oxide（N2O）	Hydrofluorocarbons（HFCs）	Perfluorocarbons（PFCs）	Sulfur hexafluoride（SF6）	Nitrogen trifluoride（NF3）	Total
GWP	1	25	298	HFC-134a : 1,430 and the like	PFC-14 : 7,390 and the like	22,800	17,200	
1990	1,162	44	32	16	7	13	0.03	1,274
1991	1,171	43	31	17	8	14	0.03	1,284
1992	1,181	44	31	18	8	16	0.03	1,297
1993	1,174	40	31	18	11	16	0.04	1,289
1994	1,235	43	33	21	13	15	0.08	1,360
1995	1,248	42	33	25	18	16	0.20	1,382
1996	1,261	40	34	25	18	17	0.19	1,396
1997	1,259	40	35	24	20	15	0.17	1,393
1998	1,224	38	33	24	17	13	0.19	1,348
1999	1,259	38	27	24	13	9	0.32	1,370
2000	1,280	38	30	23	12	7	0.29	1,389
2001	1,263	37	26	19	10	6	0.29	1,361
2002	1,299	36	25	16	9	6	0.37	1,392
2003	1,304	34	25	16	9	5	0.42	1,395
2004	1,303	35	25	12	9	5	0.49	1,391
2005	1,311	35	25	13	9	5	1.47	1,399
2006	1,290	35	25	15	9	5	1.40	1,380
2007	1,325	35	24	17	8	5	1.59	1,415
2008	1,240	35	23	19	6	4	1.48	1,329
2009	1,167	34	23	21	4	2	1.35	1,252
2010	1,217	35	22	23	4	2	1.54	1,306
2011	1,266	34	22	26	4	2	1.80	1,356
2012	1,300	33	21	29	3	2	1.51	1,391
2013	1,316	33	21	32	3	2	1.62	1,409
2014	1,269	32	21	36	3	2	1.12	1,364
2015	1,227	31	21	39	3	2	0.57	1,325

Note:
・GWP; Global Warming Potential: a coefficient to indicate the extent that a GHG in question brings a greenhouse gas effect. It is expressed by a ratio of the effect caused by the GHG to that caused by CO2. The values are from the Intergovernmental Panel on Climate Change (IPCC) Fourth Assessment Report (2007).
・Non-energy rerated CO2 emissions include Indirect CO2 emission

Source: "National Greenhouse Gas Inventory Report of JAPAN," Ministry of the Environment

2.02 Trends in Carbon Dioxide Emissions by Sectors in Japan

CO2 emissions from energy sources (Unit: million t-CO2, % increase/decrease compared with 1990)

	Total ①		Industry		Transport		Commercial and other		Households		Energy conversion	
1990	1,066.8		501.9		206.2		137.0		130.6		91.1	
1991	1,074.0	0.7%	491.0	-2.2%	218.7	6.0%	140.4	2.5%	132.5	1.5%	91.5	0.4%
1992	1,082.5	1.5%	480.7	-4.2%	225.1	9.2%	145.0	5.9%	139.8	7.0%	91.8	0.8%
1993	1,077.8	1.0%	466.8	-7.0%	228.4	10.7%	151.3	10.4%	141.0	7.9%	90.4	-0.8%
1994	1,134.2	6.3%	483.7	-3.6%	238.0	15.4%	166.6	21.6%	148.4	13.6%	97.6	7.1%
1995	1,146.7	7.5%	477.8	-4.8%	246.5	19.5%	170.2	24.3%	151.8	16.3%	100.3	10.0%
1996	1,158.4	8.6%	482.1	-3.9%	252.8	22.6%	175.2	27.8%	151.4	15.9%	97.0	6.4%
1997	1,157.2	8.5%	473.4	-5.7%	253.9	23.1%	180.5	31.8%	147.8	13.1%	101.6	11.5%
1998	1,128.1	5.7%	443.2	-11.7%	251.9	22.1%	193.4	41.2%	147.8	13.2%	91.7	0.7%
1999	1,162.8	9.0%	454.7	-9.4%	256.0	24.1%	203.4	48.5%	156.3	19.6%	92.4	1.4%
2000	1,182.1	10.8%	465.9	-7.2%	254.8	23.6%	210.3	53.5%	161.3	23.5%	89.8	-1.4%
2001	1,167.0	9.4%	453.3	-9.7%	258.9	25.5%	210.0	53.3%	157.6	20.6%	87.2	-4.2%
2002	1,206.5	13.1%	467.8	-6.8%	255.1	23.7%	221.4	61.6%	169.0	29.4%	93.3	2.4%
2003	1,211.6	13.6%	470.8	-6.2%	251.3	21.8%	225.7	64.8%	171.0	31.0%	92.7	1.8%
2004	1,211.6	13.6%	468.2	-6.7%	245.2	18.9%	238.8	74.3%	170.1	30.2%	89.2	-2.0%
2005	1,219.0	14.3%	456.9	-9.0%	239.7	16.2%	238.9	74.4%	179.9	37.7%	103.7	13.8%
2006	1,199.9	12.5%	471.8	-6.0%	236.1	14.5%	235.7	72.0%	168.3	28.8%	88.0	-3.4%
2007	1,234.6	15.7%	472.0	-6.0%	234.0	13.5%	237.3	73.2%	183.7	40.7%	107.6	18.1%
2008	1,153.2	8.1%	417.0	-16.9%	225.3	9.2%	231.5	69.0%	173.7	33.0%	105.8	16.1%
2009	1,090.0	2.2%	382.1	-23.9%	221.4	7.4%	219.9	60.5%	163.4	25.1%	103.2	13.3%
2010	1,138.8	6.7%	413.5	-17.6%	222.1	7.7%	218.8	59.7%	174.1	33.3%	110.2	21.0%
2011	1,188.4	11.4%	429.0	-14.5%	220.5	6.9%	235.9	72.2%	191.8	46.8%	111.3	22.1%
2012	1,220.7	14.4%	432.2	-13.9%	226.1	9.6%	253.6	85.1%	204.2	56.3%	104.6	14.8%
2013	1,235.0	15.8%	431.9	-14.0%	224.7	8.9%	278.3	103.1%	201.3	54.2%	98.9	8.5%
2014	1,189.4	11.5%	424.1	-15.5%	217.1	5.3%	274.0	100.0%	189.1	44.8%	85.0	-6.7%
2015	1,149.0	7.7%	411.2	-18.1%	213.3	3.4%	265.4	93.7%	179.5	37.4%	79.5	-12.7%

CO2 emissions from non-energy sources

	Total ②		Industrial processes		Agriculture		Waste		Leakage from fuel		total（①+②）	
1990	95.6		65.1		0.6		24.0		5.9		1,162.5	
1991	96.7	1.1%	66.2	1.7%	0.5	-10.0%	24.2	0.8%	5.7	-2.5%	1,170.7	0.7%
1992	98.2	2.7%	66.1	1.6%	0.5	-19.0%	26.0	8.3%	5.5	-5.9%	1,180.6	1.6%
1993	95.7	0.1%	64.9	-0.4%	0.5	-14.0%	25.0	4.2%	5.3	-10.2%	1,173.5	1.0%
1994	100.6	5.2%	66.4	2.0%	0.3	-43.7%	28.6	19.1%	5.3	-10.6%	1,234.8	6.2%
1995	101.7	6.4%	66.8	2.5%	0.4	-41.0%	29.1	21.4%	5.4	-7.6%	1,248.4	7.4%
1996	102.9	7.6%	67.3	3.3%	0.3	-42.6%	29.6	23.5%	5.6	-5.6%	1,261.2	8.5%
1997	101.8	6.4%	64.7	-0.7%	0.4	-39.0%	31.2	30.0%	5.5	-6.6%	1,258.9	8.3%
1998	95.5	-0.1%	58.6	-10.0%	0.4	-38.1%	31.4	31.0%	5.1	-13.9%	1,223.6	5.3%
1999	95.7	0.1%	58.9	-9.6%	0.4	-39.2%	31.4	30.7%	5.1	-13.4%	1,258.6	8.3%
2000	97.7	2.2%	59.4	-8.9%	0.4	-27.3%	32.9	36.9%	5.1	-13.5%	1,279.8	10.1%
2001	95.6	0.0%	58.0	-10.9%	0.4	-39.6%	32.5	35.5%	4.7	-19.9%	1,262.6	8.6%
2002	93.0	-2.8%	55.3	-15.0%	0.4	-33.0%	32.8	36.5%	4.4	-24.7%	1,299.5	11.8%
2003	92.7	-3.0%	54.6	-16.2%	0.4	-29.3%	33.5	39.6%	4.2	-27.9%	1,304.4	12.2%
2004	91.8	-4.0%	54.5	-16.2%	0.4	-33.9%	32.7	36.2%	4.1	-29.9%	1,303.4	12.1%
2005	91.8	-4.0%	55.6	-14.6%	0.4	-32.6%	31.7	31.9%	4.1	-31.1%	1,310.8	12.8%
2006	90.2	-5.7%	55.9	-14.2%	0.4	-37.0%	29.9	24.6%	4.0	-31.7%	1,290.1	11.0%
2007	90.0	-5.9%	55.1	-15.4%	0.5	-17.9%	30.5	27.0%	3.9	-33.3%	1,324.6	13.9%
2008	86.7	-9.4%	50.8	-22.0%	0.4	-27.7%	31.9	32.7%	3.6	-39.4%	1,239.9	6.7%
2009	77.1	-19.4%	45.2	-30.5%	0.4	-35.9%	28.2	17.5%	3.3	-44.3%	1,167.1	0.4%
2010	78.6	-17.8%	46.3	-28.9%	0.4	-33.8%	28.7	19.6%	3.2	-46.3%	1,217.4	4.7%
2011	77.7	-18.7%	46.2	-29.0%	0.4	-31.9%	28.0	16.8%	3.0	-48.4%	1,266.1	8.9%
2012	79.6	-16.8%	46.3	-28.9%	0.5	-14.6%	29.8	24.3%	2.9	-50.0%	1,300.3	11.9%
2013	80.8	-15.5%	48.0	-26.2%	0.6	-5.1%	29.3	22.2%	2.9	-50.9%	1,315.9	13.2%
2014	79.3	-17.0%	47.4	-27.2%	0.6	-8.2%	28.5	18.8%	2.8	-52.2%	1,268.7	9.1%
2015	78.4	-18.0%	46.2	-29.1%	0.6	-8.2%	28.9	20.3%	2.9	-51.5%	1,227.4	5.6%

Note:
The emissions from energy sources by sector are the amount that CO2 emissions caused by power and heat generation are allocated to each of the final consumption sectors.

Source: "National Greenhouse Gas Inventory Report of JAPAN, " Ministry of the Environment

2.03 Trend in Major Socioeconomic Activities and Carbon Dioxide emissions (1)

	FY1990	1995	1996	1997	1998	1999	2000	2001	2002	2003	2004	2005
Total CO_2 emissions (M Mt-CO_2)	1,162.5	1,248.4	1,261.2	1,258.9	1,223.6	1,258.6	1,279.8	1,262.6	1,299.5	1,304.4	1,303.4	1,310.8
(vs. the previous year)		1.1%	1.0%	-0.2%	-2.8%	2.9%	1.7%	-1.3%	2.9%	0.4%	-0.1%	0.6%
(vs. 1990)		7.4%	8.5%	8.3%	5.3%	8.3%	10.1%	8.6%	11.8%	12.2%	12.1%	12.8%
Emissions from energy sources	1,066.8	1,146.7	1,158.4	1,157.2	1,128.1	1,162.8	1,182.1	1,167.0	1,206.5	1,211.6	1,211.6	1,219.0
(vs. the previous year)		1.1%	1.0%	-0.1%	-2.5%	3.1%	1.7%	-1.3%	3.4%	0.4%	0.0%	0.6%
(vs. 1990)		7.5%	8.6%	8.5%	5.7%	9.0%	10.8%	9.4%	13.1%	13.6%	13.6%	14.3%
Emissions from non-energy sources	95.6	101.7	102.9	101.8	95.5	95.7	97.7	95.6	93.0	92.7	91.8	91.8
(vs. the previous year)		1.1%	1.1%	-1.1%	-6.2%	0.2%	2.1%	-2.2%	-2.8%	-0.2%	-1.1%	0.0%
(vs. 1990)		6.4%	7.6%	6.4%	-0.1%	0.1%	2.2%	0.0%	-2.8%	-3.0%	-4.0%	-4.0%
Electric energy generation of electric companies (in MM kWh)	757,593	868,027	884,574	904,935	909,150	921,062	940,687	921,997	935,807	920,134	946,756	969,135
(vs. the previous year)		2.2%	1.9%	2.3%	0.5%	1.3%	2.1%	-2.0%	1.5%	-1.7%	2.9%	2.4%
(vs. 1990)		14.6%	16.8%	19.4%	20.0%	21.6%	24.2%	21.7%	23.5%	21.5%	25.0%	27.9%
Components of power supply by source	100.0%	100.0%	100.0%	100.0%	100.0%	100.0%	100.0%	100.0%	100.0%	100.0%	100.0%	100.0%
Thermal power	61.5%	56.5%	56.2%	54.1%	52.7%	55.8%	56.0%	55.6%	59.2%	63.1%	59.7%	60.0%
Hydro power	11.7%	9.7%	9.4%	10.3%	10.5%	9.6%	9.5%	9.4%	9.0%	10.4%	10.1%	8.2%
Nuclear power	26.6%	33.4%	34.0%	35.2%	36.4%	34.3%	34.2%	34.7%	31.4%	26.1%	29.8%	31.4%
New energy	0.2%	0.3%	0.4%	0.4%	0.4%	0.4%	0.3%	0.3%	0.3%	0.4%	0.3%	0.3%
Industrial Production Index (IPI : in 2005 = 100)	107.4	101.7	105.1	106.3	99.0	101.6	106.0	96.3	99.0	102.0	105.9	107.6
(vs. the previous year)		2.1	3.4	1.2	-7.3	2.6	4.3	-9.7	2.8	2.9	3.9	1.7
Crude steel production (in 1,000 t)	111,710	100,023	100,793	102,800	90,979	97,999	106,901	102,064	109,786	110,998	112,897	112,718
(vs. the previous year)		-1.3%	0.8%	2.0%	-11.5%	7.7%	9.1%	-4.5%	7.6%	1.1%	1.7%	-0.2%
(vs. 1990)		-10.5%	-9.8%	-8.0%	-18.6%	-12.3%	-4.3%	-8.6%	-1.7%	-0.6%	1.1%	0.9%
Ethylene production (in 1,000 t)	5,810	6,944	7,138	7,338	7,223	7,721	7,566	7,206	7,283	7,419	7,555	7,549
(vs. the previous year)		13.4%	2.8%	2.8%	-1.6%	6.9%	-2.0%	-4.8%	1.1%	1.9%	1.8%	-0.1%
(vs. 1990)		19.5%	22.9%	26.3%	24.3%	32.9%	30.2%	24.0%	25.4%	27.7%	30.0%	130593.9%
Cement production (in 1,000 t)	86,893	91,645	94,363	89,446	80,794	80,494	80,068	75,722	70,819	68,253	67,046	70,127
(vs. the previous year)		0.0%	3.0%	-5.2%	-9.7%	-0.4%	-0.5%	-5.4%	-6.5%	-3.6%	-1.8%	4.6%
(vs. 1990)		5.5%	8.6%	2.9%	-7.0%	-7.4%	-7.9%	-12.9%	-18.5%	-21.5%	-22.8%	-19.3%
Paper, paperboard and pulp production (in 1,000 t)	39,227	40,637	41,068	42,414	40,507	42,086	43,008	40,942	41,415	41,149	41,550	41,832
(vs. the previous year)		4.3%	1.1%	3.3%	-4.5%	3.9%	2.2%	-4.8%	1.2%	-0.6%	1.0%	0.7%
(vs. 1990)		3.6%	4.7%	8.1%	3.3%	7.3%	9.6%	4.4%	5.6%	4.9%	5.9%	6.6%
Number of households (in 1,000)	41,156	44,236	44,831	45,498	46,157	46,812	47,420	48,015	48,638	49,261	49,838	50,382
(vs. the previous year)		1.3%	1.3%	1.5%	1.4%	1.4%	1.3%	1.3%	1.3%	1.3%	1.2%	1.1%
(vs. 1990)		7.5%	8.9%	10.5%	12.1%	13.7%	15.2%	16.7%	18.2%	19.7%	21.1%	22.4%
Commercial sector's floor area (in M m^2)	1,285	1,498	1,530	1,564	1,601	1,631	1,656	1,686	1,702	1,722	1,739	1,759
(vs. the previous year)		3.0%	2.1%	2.2%	2.4%	1.9%	1.5%	1.8%	0.9%	1.2%	1.0%	1.2%
(vs. 1990)		16.6%	19.1%	21.7%	24.6%	26.9%	28.9%	31.2%	32.5%	34.0%	35.3%	36.9%
Transport volume in passenger sector (in M persons / km)	1,295,356	1,385,408	1,405,948	1,416,287	1,421,926	1,422,105	1,417,323	1,422,857	1,423,180	1,424,193	1,416,130	1,409,239
(vs. the previous year)		1.5%	1.5%	0.7%	0.4%	0.0%	-0.3%	0.4%	0.0%	0.1%	-0.6%	-0.5%
(vs. 1990)		7.0%	8.5%	9.3%	9.8%	9.8%	9.4%	9.8%	9.9%	9.9%	9.3%	8.8%
Private vehicles	727,049	806,336	823,552	839,254	852,031	854,762	851,893	856,140	857,330	855,827	849,692	833,455
Business vehicles	12,558	11,078	10,661	10,293	9,912	9,728	9,678	9,477	9,557	9,610	9,303	9,222
Bus	110,972	97,287	94,891	92,900	90,433	88,686	87,306	86,350	86,181	86,391	86,286	88,066
Railway	387,478	400,056	402,156	395,239	388,938	385,101	384,441	385,421	382,236	384,958	385,163	391,228
Navigation	6,274	5,637	5,634	5,351	4,620	4,479	4,304	4,006	3,893	4,024	3,869	4,025
Aviation	51,624	65,014	69,053	73,250	75,992	79,349	79,700	81,463	83,982	83,382	81,816	83,242
Transport volume in cargo sector (in M tons / km)	461,127	466,837	477,615	472,844	457,134	463,584	479,072	481,592	471,895	461,655	465,892	463,815
(vs. the previous year)		1.7%	2.3%	-1.0%	-3.3%	1.4%	3.3%	0.5%	-2.0%	-2.2%	0.9%	-0.4%
(vs. 1990)		1.2%	3.6%	2.5%	-0.9%	0.5%	3.9%	4.4%	2.3%	0.1%	1.0%	0.6%
Truck	188,586	202,482	209,929	210,226	206,250	210,572	214,190	213,954	213,190	219,643	223,525	228,351
Railway	27,196	25,101	24,968	24,618	22,920	22,541	22,136	22,193	22,131	22,794	22,476	22,813
Navigation	244,546	238,330	241,756	237,018	226,980	229,432	241,671	244,451	235,582	218,191	218,833	211,576
Aviation	799	924	963	981	985	1,039	1,075	994	991	1,027	1,059	1,076

2.03 Trend in Major Socioeconomic Activities and Carbon Dioxide emissions (2)

	2006	FY2007	2008	2009	2010	2011	2012	2013	2014	2015	Source
Total CO_2 emissions (M Mt-CO_2)	1,290.1	1,324.6	1,239.9	1,167.1	1,217.4	1,266.1	1,300.3	1,315.9	1,268.7	1,227.4	Greenhouse Gas emissions/removals listings
(vs. the previous year)	-1.6%	2.7%	-6.4%	-5.9%	4.3%	4.0%	2.7%	1.2%	-3.6%	-3.3%	
(vs. 1990)	11.0%	13.9%	6.7%	0.4%	4.7%	8.9%	11.9%	13.2%	9.1%	5.6%	
Emissions from energy sources	1,199.9	1,234.6	1,153.2	1,090.0	1,138.8	1,188.4	1,220.7	1,235.0	1,189.4	1,149.0	
(vs. the previous year)	-1.6%	2.9%	-6.6%	-5.5%	4.5%	4.4%	2.7%	1.2%	-3.7%	-3.4%	
(vs. 1990)	12.5%	15.7%	8.1%	2.2%	6.7%	11.4%	14.4%	15.8%	11.5%	7.7%	
Emissions from non-energy sources	90.2	90.0	86.7	77.1	78.6	77.7	79.6	80.8	79.3	78.4	
(vs. the previous year)	-1.7%	-0.2%	-3.7%	-11.0%	1.9%	-1.1%	2.4%	1.6%	-1.9%	-1.1%	
(vs. 1990)	-5.7%	-5.9%	-9.4%	-19.4%	-17.8%	-18.7%	-16.8%	-15.5%	-17.0%	-18.0%	
Electric energy generation of electric companies (in MM kWh)	972,883	1,004,622	957,889	925,392	918,239	857,405	821,955	823,668	790,561	762,551	The Electric Power Companies Handbook(Component ratio of electric power supply is based on electric-generating capacity.)
(vs. the previous year)	0.4%	3.3%	-4.7%	-3.4%	-0.8%	-6.6%	-4.1%	0.2%	-4.0%	-3.5%	※As to the data for 2010, neither other "electric power suppliers" in the area of "Electric power distributors" nor their electric power generating amount are included in this table.
(vs. 1990)	28.4%	32.6%	26.4%	22.1%	21.2%	13.2%	8.5%	8.7%	4.4%	0.7%	
Components of power supply by source	100.0%	100.0%	100.0%	100.0%	100.0%	100.0%	100.0%	100.0%	100.0%	100.0%	
Thermal power	59.4%	65.8%	64.9%	61.4%	62.2%	80.1%	89.8%	90.2%	90.6%	88.6%	
Hydro power	9.1%	7.6%	7.9%	8.1%	8.3%	8.7%	8.2%	8.3%	8.8%	9.7%	
Nuclear power	31.2%	26.3%	26.9%	30.2%	29.3%	10.9%	1.8%	1.0%	0.0%	1.1%	
New energy	0.3%	0.3%	0.3%	0.3%	0.3%	0.3%	0.3%	0.5%	0.5%	0.6%	
Industrial Production Index (IPI : in 2005 = 100)	112.5	115.6	101.0	91.3	99.4	98.8	95.8	99.0	98.4	97.4	The comprehensive list of Production Index(Indices of Industrial Production, Producer's Shipment and Producer's Inventory) －Base year 2005－
(vs. the previous year)	4.9	3.1	-14.6	-9.7	8.1	-0.6	-3.0	3.2	-0.6	-1.0	
Crude steel production (in 1,000 t)	117,745	121,511	105,500	96,448	110,793	106,462	107,305	111,524	109,844	104,229	Current Survey of Production, Ministry of Economy, Trade, and Industry (For 2002 - 2010, the Annual Report of Statistics for Metals, Non-metals, and Metal products. For 1990～2000, cf. The Annual Report of Statistics for steel)
(vs. the previous year)	4.5%	3.2%	-13.2%	-8.6%	14.9%	-3.9%	0.8%	3.9%	-1.5%	-5.1%	
(vs. 1990)	5.4%	8.8%	-5.6%	-13.7%	-0.8%	-4.7%	-3.9%	-0.2%	-1.7%	-6.7%	
Ethylene production (in 1,000 t)	7,661	7,559	6,520	7,219	6,999	6,474	6,261	6,764	6,687	6,780	Current Survey of Production, Ministry of Economy, Trade, and Industry (For 1990 - 2010, the Annual Report of Statistics for Chemical industries)
(vs. the previous year)	1.5%	-1.3%	-13.7%	10.7%	-3.0%	-7.5%	-3.3%	8.0%	-1.1%	1.4%	
(vs. 1990)	31.9%	30.1%	12.2%	24.3%	20.5%	11.4%	7.8%	16.4%	15.1%	16.7%	
Cement production (in 1,000 t)	70,145	66,477	61,295	53,195	50,901	52,641	55,072	58,827	56,882	54,242	Current Survey of Production, Ministry of Economy, Trade, and Industry (For 1990 - 2010, the Annual report of Statistics re: Ceramic engineering and Architectural materials
(vs. the previous year)	0.0%	-5.2%	-7.8%	-13.2%	-4.3%	3.4%	4.6%	6.8%	-3.3%	-4.6%	
(vs. 1990)	-19.3%	-23.5%	-29.5%	-38.8%	-41.4%	-39.4%	-36.6%	-32.3%	-34.5%	-37.6%	
Paper, paperboard and pulp production (in 1,000 t)	41,910	42,304	38,620	35,782	36,754	35,543	34,275	35,618	35,118	34,986	Current Survey of Production, Ministry of Economy, Trade, and Industry (For 1990-2001, the Annual Report for Paper, Pulp; For 2002-2003, the Annual Report for Paper, Pulp, Plastics, Rubber products, For 2004 - 2010, the Annual Report of Statistics for Paper, Printing, Plastics, Rubber products) For 1990-1996, the data are taken by the calendar year.
(vs. the previous year)	0.2%	0.9%	-8.7%	-7.4%	2.7%	-3.3%	-3.6%	3.9%	-1.4%	-0.4%	
(vs. 1990)	6.8%	7.8%	-1.5%	-8.8%	-6.3%	-9.4%	-12.6%	-9.2%	-10.5%	-10.8%	
Number of households (in 1,000)	51,102	51,713	52,325	52,878	53,363	53,783	54,171	54,595	54,952	55,364	Survey on Population, Demographics and the number of households based on the Basic Resident Register (Ministry of Internal Affairs and Communications)
(vs. the previous year)	1.4%	1.2%	1.2%	1.1%	0.9%	0.8%	0.7%	0.8%	0.7%	0.8%	
(vs. 1990)	24.2%	25.6%	27.1%	28.5%	29.7%	30.7%	31.6%	32.7%	33.5%	34.5%	
Commercial sector's floor area (in M m^2)	1,776	1,791	1,812	1,821	1,830	1,827	1,838	1,850	1,859	1,869	
(vs. the previous year)	1.0%	0.8%	1.2%	0.5%	0.5%	-0.2%	0.6%	0.7%	0.5%	0.5%	
(vs. 1990)	38.2%	39.4%	41.0%	41.7%	42.4%	42.2%	43.0%	44.0%	44.7%	45.4%	The Energy Data and Modelling Center （EDMC, 2017）
Transport volume in passenger sector (in M persons / km)	1,401,124	1,410,596	1,392,870	1,368,794	1,347,201	1,336,914	1,377,576	1,379,556	1,375,033	1,382,774	
(vs. the previous year)	-0.6%	0.7%	-1.3%	-1.7%	-1.6%	-0.8%	3.0%	0.1%	-0.3%	0.6%	
(vs. 1990)	8.2%	8.9%	7.5%	5.7%	4.0%	3.2%	6.3%	6.5%	6.2%	6.7%	The Energy Data and Modelling Center （EDMC, 2017）
Private vehicles	817,785	818,993	805,415	801,163	783,502	777,931	800,584	787,855	783,770	780,749	
Business vehicles	9,198	8,913	8,489	8,155	7,796	7,292	7,210	7,044	6,930	6,508	
Bus	88,699	88,969	89,921	87,402	85,654	82,351	84,363	82,835	80,571	79,750	
Railway	395,908	405,544	404,585	393,765	393,466	395,067	404,396	414,387	413,970	427,486	
Navigation	3,783	3,834	3,510	3,073	3,004	3,047	3,092	3,265	2,986	N.A.	
Aviation	85,752	84,343	80,950	75,235	73,779	71,226	77,931	84,169	86,807	88,280	
Transport volume in cargo sector (in M tons / km)	468,498	469,200	447,518	417,214	449,151	431,482	410,925	422,861	417,026	409,044	The Energy Data and Modelling Center （EDMC, 2017）
(vs. the previous year)	1.0%	0.1%	-4.6%	-6.8%	7.7%	-3.9%	-4.8%	2.9%	-1.4%	-1.9%	
(vs. 1990)	1.6%	1.8%	-3.0%	-9.5%	-2.6%	-6.4%	-10.9%	-8.3%	-9.6%	-11.3%	
Trucks	239,363	241,758	236,324	228,293	247,821	235,590	211,644	215,830	211,753	206,025	
Railway	23,192	23,334	22,256	20,562	20,398	19,998	20,471	21,071	21,029	21,519	
Navigation	207,849	202,962	187,859	167,315	179,898	174,900	177,791	184,860	183,120	180,381	
Aviation	1,095	1,146	1,080	1,044	1,033	993	1,018	1,100	1,125	1,120	

Source: Ministry of the Environment

2.04 Trends in carbon dioxide emissions by energy use in major countries and regions (1)

CO_2 emissions in the world (Unit: million t-CO_2)

	1971	1973	1980	1990	1995	2000	2005	2007	2008	2009	2010	2011	2012	2013	2014
North America	4,628	5,066	5,017	5,222	5,522	6,159	6,237	6,242	6,054	5,634	5,873	5,747	5,568	5,653	5,731
USA	4,288	4,690	4,595	4,802	5,073	5,643	5,702	5,686	5,512	5,120	5,347	5,211	5,031	5,103	5,176
Canada	340	376	422	420	449	516	535	556	543	514	526	536	537	550	555
Latin America	452	528	732	840	981	1,189	1,320	1,399	1,465	1,434	1,529	1,573	1,637	1,654	1,681
Mexico	93.7	118	205	257	291	360	411	432	432	423	438	455	458	448	431
Brazil	87.5	112	168	184	228	292	311	330	348	324	371	390	422	451	476
Chile	21.0	20.0	21.4	29.4	37.1	48.6	54.4	63.1	66.5	64.2	68.6	75.3	77.2	82.0	75.8
Peru	15.4	16.3	20.4	19.1	23.3	26.4	28.6	30.9	35.2	37.7	41.1	44.2	44.0	44.8	47.8
Europe	5,813	6,389	7,394	7,841	6,459	6,270	6,498	6,608	6,584	6,076	6,330	6,321	6,244	6,129	5,838
Europe OECD	3,625	3,929	4,101	3,901	3,824	3,893	4,028	4,018	3,943	3,672	3,793	3,649	3,639	3,560	3,392
UK	621	634	570	548	514	521	531	521	508	459	477	438	462	450	408
Germany	978	1,052	1,048	940	857	812	787	767	775	720	759	731	745	764	723
France	423	474	455	346	344	365	370	353	349	333	340	310	312	317	286
Italy	289	328	355	389	401	420	456	441	429	384	392	384	367	337	320
Europe non-OECD	2,188	2,460	3,293	3,940	2,635	2,377	2,471	2,590	2,641	2,404	2,537	2,672	2,605	2,569	2,446
Former Soviet Union	1,942	2,189	2,936	3,606	2,400	2,164	2,232	2,344	2,397	2,181	2,318	2,434	2,384	2,366	2,249
Russia	N.A.	N.A.	N.A.	2,163	1,548	1,474	1,482	1,533	1,554	1,440	1,529	1,604	1,551	1,535	1,468
Africa	249	285	398	529	576	658	857	909	967	956	996	1,002	1,056	1,072	1,105
South Africa	157	178	208	244	260	281	372	391	423	399	407	395	408	423	437
Middle East	96	124	303	536	744	880	1,148	1,281	1,366	1,433	1,490	1,540	1,609	1,654	1,728
Iran	39	52	88	171	244	312	418	480	487	504	498	508	512	535	556
Saudi Arabia	13	18	99	151	192	235	298	333	364	379	419	435	463	471	507
Asia	2,014	2,303	3,065	4,590	6,016	6,732	9,533	10,988	11,155	11,686	12,645	13,562	13,927	14,402	14,715
China	780	864	1,364	2,076	2,887	3,086	5,358	6,469	6,608	7,026	7,707	8,465	8,621	8,980	9,087
Japan	751	897	870	1,041	1,108	1,141	1,178	1,206	1,121	1,060	1,112	1,166	1,209	1,230	1,189
Hong Kong	9.2	9.6	14.6	33.3	36.5	40.3	41.3	44.0	42.9	46.2	42.0	45.6	45.1	46.1	47.9
Taiwan	29.8	38.1	71.4	111	154	214	254	264	253	240	256	255	247	248	250
South Korea	52.9	68.2	126	232	357	432	458	477	489	502	551	574	575	572	568
Singapore	6.06	8.12	12.65	28.96	37.57	42.12	37.86	39.42	39.35	40.33	44.28	46.74	45.96	46.24	45.32
Brunei	0.400	0.680	2.64	3.26	4.50	4.42	4.82	6.84	7.22	7.43	6.86	7.01	6.97	6.85	6.70
Indonesia	25.2	32.1	67.6	134	204	255	319	354	350	365	377	385	392	400	437
Malaysia	12.8	13.0	23.7	49.6	79.6	115	156	178	190	170	190	191	193	209	221
Philippines	23.0	27.3	33.3	38.0	57.2	68.1	71.5	69.0	71.2	71.5	77.1	77.7	80.4	89.6	95.7
Thailand	16.2	20.7	33.7	80.9	140	152	200	209	215	207	223	222	239	247	244
India	181	188	262	530	708	890	1,080	1,265	1,345	1,513	1,594	1,674	1,791	1,852	2,020
Vietnam	16.3	17.6	14.9	17.4	27.5	44.2	79.1	89.8	101	112	126	126	125	130	143
Oceania	157	174	223	281	309	364	406	420	423	426	420	417	418	414	405
Australia	143	158	207	260	285	335	372	387	390	396	390	387	387	383	374
New Zealand	13.5	16.7	16.5	21.7	23.9	29.0	33.7	32.6	33.5	30.5	30.4	29.7	31.2	31.0	31.2
OECD 34	9,342	10,288	10,582	10,996	11,494	12,452	12,830	12,923	12,593	11,846	12,323	12,150	12,018	12,027	11,856
Non-OECD	4,077	4,590	6,565	8,877	9,150	9,840	13,211	14,968	15,464	15,846	17,001	18,057	18,486	18,997	19,395
EU 28	N.A.	N.A.	N.A.	4,024	3,812	3,787	3,920	3,868	3,788	3,504	3,612	3,463	3,425	3,348	3,160
EU 15	N.A.	N.A.	N.A.	3,038	3,013	3,086	3,192	3,121	3,058	2,826	2,910	2,761	2,751	2,699	2,534
Euro zone 19	N.A.	N.A.	N.A.	2,549	2,485	2,553	2,662	2,605	2,559	2,370	2,438	2,333	2,303	2,264	2,139
APEC 20	N.A.	N.A.	N.A.	11,817	12,824	14,027	16,774	18,128	18,053	17,873	19,082	19,903	19,895	20,381	20,491
ASEAN 9	105	123	194	356	559	693	881	960	986	984	1,057	1,068	1,098	1,147	1,217
Bunker	523	579	559	630	718	853	997	1,099	1,108	1,057	1,126	1,147	1,089	1,105	1,130
World	13,942	15,458	17,706	20,503	21,362	23,144	27,038	28,990	29,165	28,749	30,450	31,354	31,593	32,129	32,381

Note:
For the figures in the shadowed columns, the values are calculated by summing CO2 emissions of each country in the group, as the source data do not pertain the same group.

Source: CO_2 Emissions from Fuel Combustion Highlights 2016

2.04 Trends in carbon dioxide emissions by energy use in major countries and regions (2)

CO_2 emissions per person in the world (Unit: t-CO_2 / person)

	1971	1973	1980	1990	1995	2000	2005	2007	2008	2009	2010	2011	2012	2013	2014
North America	20.2	21.6	19.9	18.8	18.7	19.7	19.0	18.7	17.9	16.5	17.1	16.6	15.9	16.1	16.2
USA	20.7	22.1	20.2	19.2	19.0	20.0	19.3	18.9	18.1	16.7	17.3	16.7	16.0	16.1	16.2
Canada	15.5	16.7	17.2	15.2	15.3	16.8	16.6	16.9	16.3	15.3	15.5	15.6	15.5	15.6	15.6
Latin America	1.55	1.72	2.02	1.89	2.03	2.28	2.37	2.45	2.54	2.45	2.59	2.63	2.71	2.71	2.72
Mexico	1.75	2.06	2.91	2.95	3.08	3.56	3.83	3.93	3.88	3.75	3.83	3.94	3.91	3.78	3.60
Brazil	0.89	1.08	1.37	1.23	1.40	1.66	1.65	1.71	1.79	1.65	1.87	1.94	2.09	2.21	2.31
Chile	2.16	1.99	1.92	2.23	2.57	3.16	3.35	3.80	3.97	3.79	4.01	4.36	4.43	4.65	4.25
Peru	1.12	1.12	1.17	0.88	0.97	1.02	1.04	1.09	1.23	1.30	1.40	1.49	1.46	1.47	1.54
Europe	7.81	8.44	9.30	9.29	7.54	7.27	7.45	7.53	7.47	6.86	7.12	7.08	6.96	6.81	6.46
Europe OECD	8.08	8.63	8.65	7.80	7.47	7.47	7.52	7.41	7.23	6.70	6.88	6.59	6.54	6.38	6.05
UK	11.1	11.3	10.1	9.57	8.85	8.85	8.79	8.50	8.22	7.38	7.60	6.93	7.25	7.02	6.31
Germany	12.5	13.3	13.4	11.9	10.5	10.0	9.67	9.47	9.60	8.95	9.45	9.11	9.26	9.47	8.93
France	8.07	8.89	8.25	5.93	5.77	5.99	5.87	5.52	5.43	5.16	5.23	4.75	4.75	4.81	4.32
Italy	5.35	5.99	6.29	6.86	7.05	7.38	7.84	7.51	7.24	6.44	6.55	6.39	6.08	5.56	5.26
Europe non-OECD	7.40	8.16	10.3	11.5	7.64	6.97	7.34	7.71	7.85	7.13	7.50	7.88	7.66	7.52	7.14
Former Soviet Union	7.98	8.83	11.1	12.5	8.27	7.53	7.84	8.23	8.40	7.61	8.06	8.42	8.21	8.11	7.68
Russia	N.A.	N.A.	N.A.	14.59	10.43	10.06	10.32	10.74	10.88	10.09	10.70	11.22	10.83	10.69	10.20
Africa	0.67	0.73	0.84	0.84	0.80	0.81	0.93	0.94	0.98	0.94	0.96	0.94	0.96	0.95	0.96
South Africa	6.95	7.54	7.56	6.93	6.64	6.38	7.86	8.04	8.58	7.98	8.01	7.65	7.79	7.96	8.10
Middle East	1.49	1.80	3.44	4.22	5.18	5.45	6.35	6.72	6.98	7.15	7.26	7.33	7.49	7.54	7.72
Iran	1.33	1.68	2.29	3.05	4.05	4.74	5.96	6.69	6.72	6.87	6.71	6.75	6.73	6.94	7.12
Saudi Arabia	2.08	2.62	10.03	9.23	10.2	11.0	12.0	12.8	13.6	13.8	14.9	15.1	15.7	15.6	16.4
Asia	0.99	1.08	1.26	1.57	1.89	1.98	2.64	2.97	2.99	3.10	3.32	3.53	3.59	3.67	3.72
China	0.93	0.98	1.39	1.83	2.40	2.44	4.11	4.91	4.99	5.28	5.76	6.30	6.38	6.62	6.66
Japan	7.15	8.24	7.43	8.42	8.83	9.00	9.22	9.43	8.75	8.28	8.68	9.12	9.48	9.66	9.35
Hong Kong	2.28	2.27	2.88	5.84	5.93	6.05	6.07	6.37	6.16	6.63	5.98	6.45	6.30	6.41	6.62
Taiwan	2.00	2.46	4.01	5.49	7.28	9.77	11.2	11.5	11.0	10.4	11.1	11.0	10.6	10.6	10.7
South Korea	1.61	2.00	3.29	5.41	7.92	9.18	9.50	9.8	10.0	10.2	11.2	11.5	11.5	11.4	11.3
Singapore	2.87	3.70	5.24	9.50	10.66	10.46	8.87	8.59	8.13	8.09	8.72	9.02	8.65	8.57	8.29
Brunei	2.93	4.63	13.67	12.68	15.26	13.37	13.32	18.29	18.95	19.20	17.46	17.57	17.16	16.67	16.06
Indonesia	0.21	0.26	0.46	0.74	1.04	1.21	1.41	1.52	1.49	1.53	1.56	1.57	1.58	1.59	1.72
Malaysia	1.14	1.11	1.71	2.72	3.84	4.91	6.04	6.66	7.00	6.14	6.75	6.70	6.65	7.09	7.37
Philippines	0.62	0.70	0.70	0.61	0.82	0.87	0.83	0.78	0.79	0.78	0.83	0.82	0.84	0.92	0.97
Thailand	0.43	0.52	0.71	1.43	2.36	2.43	3.04	3.16	3.24	3.11	3.35	3.31	3.56	3.67	3.60
India	0.32	0.32	0.38	0.61	0.74	0.85	0.94	1.07	1.12	1.25	1.30	1.34	1.42	1.45	1.56
Vietnam	0.37	0.38	0.28	0.26	0.38	0.57	0.96	1.07	1.19	1.30	1.45	1.43	1.41	1.45	1.58
Oceania	9.77	10.5	12.4	13.7	14.2	15.8	16.6	16.7	16.5	16.3	15.8	15.5	15.3	14.9	14.4
Australia	10.9	11.6	14.0	15.1	15.8	17.5	18.3	18.5	18.2	18.1	17.6	17.2	16.9	16.5	15.8
New Zealand	4.71	5.62	5.24	6.45	6.48	7.50	8.13	7.70	7.83	7.05	6.96	6.75	7.07	6.94	7.01
OECD 34	10.4	11.2	10.7	10.3	10.3	10.8	10.7	10.7	10.3	9.63	9.95	9.76	9.59	9.55	9.36
Non-OECD	1.43	1.53	1.90	2.11	2.00	1.99	2.49	2.74	2.80	2.83	3.00	3.14	3.17	3.22	3.24
EU 28	N.A.	N.A.	N.A.	8.42	7.89	7.77	7.92	7.76	7.57	6.98	7.17	6.86	6.77	6.60	6.22
EU 15	N.A.	N.A.	N.A.	8.29	8.08	8.17	8.24	7.96	7.76	7.14	7.32	6.92	6.87	6.72	6.29
Euro zone 19	N.A.	N.A.	N.A.	8.18	7.85	7.97	8.11	7.86	7.68	7.09	7.28	6.95	6.84	6.71	6.33
APEC 20	N.A.	N.A.	N.A.	5.17	5.29	5.51	6.34	6.75	6.68	6.56	6.96	7.21	7.16	7.29	7.28
ASEAN 9	0.376	0.420	0.558	0.829	1.17	1.34	1.59	1.69	1.72	1.69	1.80	1.80	1.82	1.88	1.97
World	3.71	3.95	3.99	3.88	3.75	3.79	4.16	4.35	4.32	4.21	4.40	4.48	4.46	4.49	4.47

Note:
For the figures in the shadowed columns, the values are calculated by dividing the total CO_2 emissions of each country in the group by total population of each country, as the source data do not pertain the same group.

Source: CO_2 Emissions from Fuel Combustion Highlights 2016

2.05 Carbon dioxide emissions by source in major countries and regions

（Unit: million t） （FY2014）

	Transport sector [1]	Bunker oil [2]	Energy conversion [3]	Industry [4]	Others [5]
Canada	176.4	3.4	214.9	66.8	96.7
Mexico	151.2	12.3	189.9	58.0	31.9
USA	1,728.8	113.4	2,380.6	448.0	618.9
Japan	208.4	30.6	631.1	228.0	121.1
South Korea	92.4	40.2	343.4	77.5	54.4
Australia	92.5	14.0	218.1	42.9	20.2
New Zealand	14.0	3.4	7.4	6.8	3.0
Austria	22.3	2.0	19.8	10.7	8.0
Belgium	25.0	21.3	22.6	18.1	21.7
Czech Republic	16.4	0.9	56.6	13.5	10.0
Denmark	11.4	5.0	15.6	3.4	4.1
Finland	10.8	2.2	22.9	7.6	4.0
France	121.2	22.7	39.4	44.8	80.3
Germany	154.5	31.4	350.5	90.0	128.2
Greece	16.3	8.3	38.3	6.0	5.3
Hungary	10.9	0.5	12.5	6.3	10.5
Iceland	0.8	0.6	0.0	0.6	0.6
Ireland	10.9	2.6	11.4	3.6	8.0
Italy	105.4	15.4	113.7	35.8	64.9
Luxembourg	6.2	1.2	0.8	0.9	1.4
Netherlands	29.5	51.4	68.0	21.8	29.1
Norway	14.0	2.0	12.9	5.7	2.7
Poland	43.7	2.2	155.2	28.7	51.5
Portugal	15.7	4.9	17.6	5.5	4.0
Slovakia	6.1	0.1	11.3	7.2	4.7
Spain	81.9	35.8	86.8	33.1	30.2
Sweden	19.9	7.6	9.1	6.5	1.9
Switzerland	16.9	4.7	3.5	5.1	12.2
Turkey	60.9	11.0	143.4	44.9	57.9
UK	116.0	39.4	171.0	39.1	81.6
North America	1,905.1	116.7	2,595.4	514.9	715.6
Europe (OECD members)	924.3	274.7	1,401.1	441.5	624.7
EU-28	870.6	265.3	1,315.7	406.0	567.6
OECD countries	3,428.5	498.3	5,463.1	1,386.7	1,577.3
Brazil	213.0	18.6	125.2	98.1	39.7
Russia	238.4	64.1	896.8	180.8	151.5
India	231.8	16.7	1,082.6	533.4	171.8
Indonesia	134.5	3.2	193.2	80.3	28.6
China*	787.9	87.0	4,779.9	2,890.0	677.0
South Africa	52.7	10.8	295.2	55.0	34.5
Europe and Eurasia (Non-OECD members)	381.1	87.3	1,405.4	335.6	324.0
Africa	286.3	43.0	557.9	139.8	121.3
Asia (except China)	693.1	222.3	1,920.8	889.5	303.5
Former Soviet Union	-	-	-	-	-
America (Non-OECD members)	434.3	74.1	377.6	234.9	127.0
Middle East	405.5	118.3	803.3	353.7	165.3
Non-OECD countries	2,988.3	632.1	9,845.0	4,843.5	1,718.2
World	7,547.3	1,130.4	15,308.1	6,230.1	3,295.5

Notes:

・Published data indicate anthropogenic emission of carbon dioxide only by energy use.
・Emissions from the use of bunker oil for international navigation and aviation are excluded (except for "world").
・Emission from the use of biomass fuel are excluded. Peat is included.
・China* includes Hong Kong.

1. Regardless of the modes, emissions caused by fuel combustion from every transporting activities are included. However, bunker oil for international navigation and aviation are excluded;
   It means to include domestic air, domestic marine transport, road transport, railway transport, and pipeline transport. "World" includes bunker oil for domestic navigation as well as international aviation.
2. Bunker oil for international navigation and aviation.
3. Power plants, heat supply plant, and oil refining.
4. Manufacturing industry and constructing industry. Excludes oil refining.
5. Emissions from commerce, public, agriculture, forestry, fishery, residence and other unidentified emission sources.

Source: "CO2 Emissions From Fuel Combustion Highlights 2016," IEA

2.06 Atmospheric concentrations and anthropogenic emission of CO2

	Annual average concentration of CO2 (ppm)	Anthropogenic emissions of CO2					
		Total (million t-CO2)	Shares by emissions source (%)				
			Solid fuel	Liquid fuel	Natural gas	Flare gas	Cement manufacturing
1950	—	5,977	65.6	25.9	5.9	1.4	1.1
1955	—	7,487	59.1	30.6	7.3	1.5	1.5
1960	316.9	9,420	54.9	33.1	8.8	1.5	1.7
1965	320.0	11,477	46.6	38.9	10.8	1.8	1.9
1970	325.7	14,861	38.4	45.4	12.2	2.1	1.9
1971	326.3	15,429	37.0	46.3	12.6	2.1	2.0
1972	327.5	16,045	36.0	47.0	12.8	2.1	2.0
1973	329.7	16,918	34.3	48.6	12.7	2.4	2.1
1974	330.2	16,951	34.1	48.6	12.9	2.3	2.1
1975	331.1	16,852	36.4	46.4	13.1	2.0	2.1
1976	332.1	17,835	35.1	47.6	12.9	2.2	2.1
1977	333.8	18,429	35.1	47.7	12.9	2.1	2.1
1978	335.4	18,652	35.2	47.0	13.4	2.1	2.3
1979	336.8	19,686	35.1	47.4	13.4	1.8	2.2
1980	338.8	19,488	36.6	45.6	13.9	1.6	2.3
1981	340.0	18,891	37.3	44.4	14.7	1.2	2.3
1982	340.8	18,748	39.0	42.9	14.5	1.3	2.4
1983	342.4	18,678	39.2	42.7	14.5	1.1	2.5
1984	344.0	19,360	39.7	41.6	15.3	1.0	2.4
1985	345.5	19,943	41.1	40.2	15.4	0.9	2.4
1986	346.9	20,559	41.0	40.9	14.8	0.8	2.4
1987	348.6	21,091	41.1	40.1	15.5	0.8	2.5
1988	351.2	21,872	40.5	40.4	15.7	0.8	2.5
1989	352.8	22,356	40.3	40.3	16.2	0.7	2.6
1990	354.0	22,466	39.5	40.7	16.6	0.7	2.6
1991	335.3	22,796	37.7	41.9	17.1	0.7	2.6
1992	356.0	22,601	38.2	40.7	17.8	0.6	2.7
1993	356.7	22,594	37.3	40.9	18.3	0.6	2.9
1994	358.2	22,975	37.6	40.6	18.2	0.6	3.0
1995	360.0	23,459	38.2	40.1	18.1	0.6	3.1
1996	361.8	23,987	37.7	40.1	18.5	0.6	3.1
1997	362.9	24,387	37.5	40.6	18.2	0.6	3.1
1998	365.6	24,358	36.0	41.6	18.7	0.5	3.1
1999	367.6	24,237	35.6	41.4	19.2	0.5	3.3
2000	368.8	24,688	34.6	42.3	19.1	0.7	3.4
2001	370.4	25,274	35.5	41.3	19.1	0.7	3.4
2002	372.4	25,641	36.0	40.5	19.2	0.7	3.6
2003	375.0	27,038	36.5	40.1	18.9	0.7	3.7
2004	376.8	28,395	37.5	39.3	18.6	0.7	3.8
2005	378.8	29,484	38.7	38.2	18.5	0.7	4.0
2006	380.9	30,565	39.5	37.1	18.4	0.7	4.3
2007	382.7	31,178	40.2	36.1	18.4	0.8	4.5
2008	384.8	32,182	40.9	35.4	18.6	0.8	4.4
2009	386.3	31,889	41.3	35.0	18.2	0.8	4.8
2010	388.6	33,469	41.8	34.0	18.6	0.7	4.9
2011	390.4	34,844	42.7	33.0	18.5	0.7	5.2
2012	392.5	35,468	42.4	33.1	18.4	0.7	5.4
2013	395.2	35,838	42.2	32.9	18.5	0.7	5.7
2014	397.1	36,139	41.8	33.3	18.5	0.7	5.8
2015	399.4	—	—	—	—	—	—
2016	402.9	—	—	—	—	—	—

Notes:

・The standard observation point: Mauna Loa Island. Hawaii. (19. 32 north latitude and 155. 35 west longitude).

・For annual average CO2 concentration, refer to the website (http://www.esrl.noaa.gov/gmd/ccgg/trends/) of NOAA Earth System Research Laboratory(NOAA / ESRL).

・ppm : One-millionth for dry air(by volume).

・For anthropogenic emission of CO2. refer to the website (http://cdiac.ornl.gov/trends/emis/meth_reg.html) of The Carbon Dioxide Information Analysis Center (CDIAC), Oak Ridge National Laboratory(ORNL).

・ Shares by emission source are estimates based on emissions by source, using the data by the Carbon Dioxide Information Analysis Center (CDIAC) of Oak Ridge National Laboratory.

・ For 2014 and 2015, data of "Anthropogenic emissions of CO2" were not disclosed to the public as of May 19, 2017.

Source: Compiled based on the data by NOAA/ESRL and data by the Carbon Dioxide Information Analysis Center (CDIAC) of Oak Ridge National Laboratory

2.07 Emissions of greenhouse gasses in major countries and regions

（Unit：1,000 t-CO2） (2014)

	Carbon dioxide（CO2）	Methane（CH4）	Nitrous oxide（N2O）	Hydro fluorocarbons（HFCs）	Perfluorocarbons（PFCs）	Sulfur hexafluoride（SF6）	Nitrogen trifluoride（NF3）	Total [1]
Canada	574,100	108,437	39,407	9,024	1,088	363	0	732,419
Mexico	-	-	-	-	-	-	0	-
USA	5,556,007	730,829	403,510	166,700	5,600	7,300	500	6,870,454
Japan	1,265,491	35,482	20,848	35,785	3,361	2,064	831	1,363,862
South Korea	-	-	-	-	-	-	0	-
Australia	393,127	98,076	20,085	10,787	193	130	0	522,397
New Zealand	35,617	34,813	9,066	1,517	73	18	0	81,104
Austria	64,263	6,623	3,427	1,653	53	302	11	76,333
Belgium	96,325	8,048	6,279	2,812	307	95	1	113,867
Czech Republic	101,154	13,239	6,324	2,830	5	96	2	123,651
Denmark	38,834	7,364	5,092	735	9	133	0	52,167
Finland	47,598	5,017	4,626	1,743	10	34	0	59,029
France	341,153	59,762	43,031	19,399	592	471	11	464,418
Germany	792,859	54,752	38,038	10,750	234	3,396	20	900,202
Greece	79,628	11,191	4,686	5,758	135	5	0	101,403
Hungary	43,573	7,614	4,502	1,428	2	104	0	57,224
Iceland	3,272	592	468	163	99	2	0	4,597
Ireland	36,624	13,433	6,985	1,155	9	46	0	58,254
Italy	342,827	43,252	18,585	11,978	1,564	354	28	418,587
Luxembourg	9,830	570	296	66	0	8	0	10,771
Netherlands	157,790	18,772	7,815	2,241	93	135	0	186,845
Norway	43,867	5,340	2,527	1,188	179	55	0	53,156
Poland	310,307	41,330	19,746	8,587	14	53	0	380,038
Portugal	47,203	12,066	3,417	1,750	0	56	0	64,492
Slovakia	33,347	4,363	2,357	546	11	14	0	40,639
Spain	253,467	38,166	19,967	17,053	66	207	0	328,926
Sweden	43,405	5,158	4,884	807	82	47	0	54,383
Switzerland	39,265	5,097	2,439	1,501	44	259	0	48,605
Turkey	382,213	57,138	23,283	4,917	-	-	0	467,550
United Kingdom	434,795	53,891	21,349	16,423	278	468	0	527,203
Chile	-	-	-	-	-	-	0	-
Esthonia	18,919	1,102	820	217	-	2	0	21,059
Israel	-	-	-	-	-	-	0	-
Latvia	7,188	2,086	1,873	128	0	9	0	11,284
Slovenia	13,490	1,979	759	324	15	16	0	16,582
North America	6,130,106	839,265	442,917	175,724	6,688	7,663	500	7,602,873
Europe (OECD members)	3,361,385	415,641	226,841	110,568	3,786	6,340	74	4,124,788
EU-15	2,786,598	338,066	188,478	94,325	3,432	5,757	71	3,416,880
OECD countries	12,793,039	1,649,388	800,272	357,603	16,449	25,045	68	15,643,363

Notes:

Israel:Include LULUCF and Indirect gases.

Mexico: Include emissions or removals from Land-use change and forestry.

North America：Total value of Canada and USA.

Europe: Total sum of Austria,Belgium, Czech Republic, Denmark, Finland,France, Germany, Greece, Hungary, Iceland, Ireland, Italy, Luxembourg, Netherlands, Norway, Poland, Portugal,Slovakia, Spain, Sweden,Swizerland United Kingdom.

* excluding Estonia, Latvia and Slovenia.

OECD Total : Excludes Israel , including estimates.

1. Excluding emissions or removals from land-use, land-use change and forestry (LULUCF).

Source: "OECD Stat"

2.08 Anomalies of annual average land temperature in the World and Japan

Anomalies of annual average land temperature of the World.

(Unit : ℃)

Year	World	Northern Hemisphere	Southern Hemisphere	Year	World	Northern Hemisphere	Southern Hemisphere
1891	-0.63	-0.68	-0.59	1956	-0.56	-0.61	-0.53
1892	-0.71	-0.80	-0.62	1957	-0.28	-0.32	-0.25
1893	-0.75	-0.87	-0.63	1958	-0.22	-0.19	-0.28
1894	-0.70	-0.73	-0.68	1959	-0.29	-0.30	-0.30
1895	-0.68	-0.75	-0.60	1960	-0.33	-0.32	-0.36
1896	-0.47	-0.53	-0.42	1961	-0.23	-0.25	-0.24
1897	-0.49	-0.53	-0.45	1962	-0.21	-0.19	-0.26
1898	-0.66	-0.65	-0.68	1963	-0.18	-0.16	-0.23
1899	-0.56	-0.58	-0.55	1964	-0.49	-0.50	-0.49
1900	-0.49	-0.48	-0.51	1965	-0.42	-0.48	-0.37
1901	-0.58	-0.55	-0.63	1966	-0.35	-0.33	-0.39
1902	-0.70	-0.75	-0.66	1967	-0.35	-0.32	-0.42
1903	-0.77	-0.78	-0.77	1968	-0.37	-0.37	-0.39
1904	-0.84	-0.88	-0.79	1969	-0.27	-0.38	-0.14
1905	-0.70	-0.72	-0.68	1970	-0.29	-0.36	-0.22
1906	-0.60	-0.59	-0.62	1971	-0.41	-0.48	-0.33
1907	-0.78	-0.85	-0.70	1972	-0.29	-0.49	-0.06
1908	-0.82	-0.84	-0.82	1973	-0.16	-0.26	-0.05
1909	-0.82	-0.84	-0.81	1974	-0.44	-0.54	-0.34
1910	-0.79	-0.78	-0.80	1975	-0.39	-0.42	-0.35
1911	-0.82	-0.79	-0.85	1976	-0.48	-0.58	-0.36
1912	-0.73	-0.83	-0.61	1977	-0.19	-0.25	-0.12
1913	-0.70	-0.79	-0.60	1978	-0.28	-0.34	-0.21
1914	-0.53	-0.57	-0.49	1979	-0.16	-0.25	-0.07
1915	-0.43	-0.47	-0.40	1980	-0.13	-0.22	-0.05
1916	-0.64	-0.70	-0.59	1981	-0.09	-0.05	-0.13
1917	-0.71	-0.77	-0.64	1982	-0.21	-0.29	-0.13
1918	-0.55	-0.61	-0.48	1983	-0.06	-0.13	0.02
1919	-0.58	-0.68	-0.45	1984	-0.24	-0.36	-0.13
1920	-0.51	-0.56	-0.46	1985	-0.26	-0.40	-0.11
1921	-0.43	-0.39	-0.52	1986	-0.17	-0.25	-0.09
1922	-0.56	-0.56	-0.58	1987	-0.01	-0.10	0.08
1923	-0.54	-0.54	-0.55	1988	-0.03	-0.06	-0.01
1924	-0.55	-0.53	-0.60	1989	-0.10	-0.12	-0.09
1925	-0.46	-0.42	-0.52	1990	0.04	0.08	0.00
1926	-0.36	-0.33	-0.42	1991	-0.02	-0.06	0.00
1927	-0.47	-0.43	-0.54	1992	-0.17	-0.25	-0.09
1928	-0.47	-0.47	-0.50	1993	-0.15	-0.22	-0.06
1929	-0.60	-0.62	-0.59	1994	-0.07	-0.07	-0.08
1930	-0.38	-0.33	-0.46	1995	0.01	0.06	-0.04
1931	-0.34	-0.31	-0.41	1996	-0.09	-0.15	-0.04
1932	-0.38	-0.38	-0.39	1997	0.09	0.10	0.07
1933	-0.53	-0.57	-0.50	1998	0.22	0.24	0.19
1934	-0.37	-0.37	-0.39	1999	0.00	0.03	-0.05
1935	-0.46	-0.45	-0.49	2000	0.00	0.02	-0.04
1936	-0.48	-0.43	-0.56	2001	0.12	0.14	0.10
1937	-0.37	-0.32	-0.46	2002	0.16	0.18	0.13
1938	-0.33	-0.26	-0.45	2003	0.16	0.20	0.10
1939	-0.37	-0.34	-0.46	2004	0.12	0.20	0.04
1940	-0.32	-0.39	-0.25	2005	0.17	0.26	0.08
1941	-0.26	-0.31	-0.21	2006	0.16	0.24	0.07
1942	-0.26	-0.31	-0.24	2007	0.12	0.24	0.00
1943	-0.23	-0.21	-0.31	2008	0.05	0.12	-0.02
1944	-0.11	-0.15	-0.11	2009	0.16	0.19	0.15
1945	-0.25	-0.33	-0.16	2010	0.20	0.28	0.12
1946	-0.40	-0.36	-0.52	2011	0.08	0.13	0.02
1947	-0.43	-0.43	-0.46	2012	0.15	0.21	0.09
1948	-0.40	-0.36	-0.50	2013	0.20	0.25	0.15
1949	-0.42	-0.40	-0.47	2014	0.27	0.38	0.17
1950	-0.49	-0.52	-0.47	2015	0.42	0.59	0.27
1951	-0.35	-0.31	-0.44	2016	0.45	0.59	0.31
1952	-0.29	-0.31	-0.30				
1953	-0.22	-0.18	-0.31				
1954	-0.45	-0.43	-0.52				
1955	-0.47	-0.42	-0.57				

Note: Anomaly, also known as the deviation from normal, is a value obtained by subtracting normal from average temperature. As normal, an average for 30 years from 1981 to 2010 is used.

Anomalies of annual average land temperature of Japan.

(Unit : ℃)

Year	Japan	Year	Japan
1891		1956	-0.74
1892		1957	-0.76
1893		1958	-0.29
1894		1959	0.12
1895		1960	-0.22
1896		1961	0.18
1897		1962	-0.37
1898	-0.75	1963	-0.64
1899	-0.81	1964	-0.29
1900	-1.06	1965	-0.99
1901	-1.03	1966	-0.53
1902	-1.03	1967	-0.47
1903	-0.77	1968	-0.64
1904	-0.86	1969	-0.79
1905	-0.95	1970	-0.75
1906	-1.33	1971	-0.68
1907	-1.22	1972	-0.14
1908	-1.44	1973	-0.30
1909	-1.14	1974	-0.91
1910	-1.22	1975	-0.35
1911	-0.70	1976	-0.87
1912	-1.12	1977	-0.41
1913	-1.59	1978	-0.16
1914	-0.20	1979	0.20
1915	-0.56	1980	-0.78
1916	-0.14	1981	-0.98
1917	-1.31	1982	-0.33
1918	-1.09	1983	-0.49
1919	-0.74	1984	-0.99
1920	-0.51	1985	-0.37
1921	-1.08	1986	-0.95
1922	-0.58	1987	-0.13
1923	-0.76	1988	-0.65
1924	-1.01	1989	0.16
1925	-0.94	1990	0.78
1926	-1.32	1991	0.25
1927	-0.93	1992	-0.11
1928	-0.62	1993	-0.52
1929	-0.87	1994	0.56
1930	-0.33	1995	-0.19
1931	-1.04	1996	-0.54
1932	-0.72	1997	0.10
1933	-0.64	1998	0.75
1934	-1.14	1999	0.49
1935	-0.76	2000	0.28
1936	-1.10	2001	-0.05
1937	-0.37	2002	0.29
1938	-0.54	2003	-0.06
1939	-0.68	2004	0.77
1940	-0.85	2005	-0.01
1941	-0.79	2006	0.20
1942	-0.67	2007	0.61
1943	-0.86	2008	0.22
1944	-1.09	2009	0.30
1945	-1.57	2010	0.61
1946	-0.36	2011	0.13
1947	-1.42	2012	0.04
1948	-0.08	2013	0.34
1949	-0.65	2014	0.14
1950	-0.29	2015	0.69
1951	-0.62	2016	0.88
1952	-0.74		
1953	-0.74		
1954	-0.53		
1955	-0.12		

Source: Compiled from the materials below

World Meteorological Agency press release (updated on 2017/2/1)
http://www.data.jma.go.jp/cpdinfo/temp/list/an_wld.html

Japan Meteorological Agency press release (updated on 2017/1/4)
http://www.data.kishou.go.jp/climate/cpdinfo/temp/list/an_jpn.html

2.09 Shipping volume of CFC in Japan (1)

Shipment volume of CFC (* ChloroFluorCarbon = CFC) (Unit : in ton)

	CFC-11						CFC-12					
	Refrigerant	Aerosol	Foaming agent	Detergent	Other	Total	Refrigerant	Aerosol	Foaming agent	Detergent	Other	Total
1985	2,139	4,283	18,295	200	291	25,208	18,834	7,059	8,269	0	149	34,311
1986	2,573	4,439	21,211	305	873	29,401	21,439	7,157	9,292	0	315	38,203
1987	2,802	4,511	25,609	503	806	34,231	22,716	7,042	11,004	0	178	40,940
1988	2,348	4,218	25,232	1,236	1,303	34,337	20,708	7,401	12,115	0	990	41,214
1989	3,051	3,807	23,541	1,156	930	32,485	24,880	6,585	9,606	0	335	41,406
1990	2,444	1,120	19,235	411	401	23,611	18,480	3,461	5,646	0	0	27,587
1991	2,156	653	17,286	713	158	20,966	15,495	2,544	2,825	81	501	21,446
1992	1,950	299	11,366	477	86	14,178	15,091	1,286	1,253	88	288	18,006
1993	2,305	93	8,557	531	14	11,500	20,109	1,016	261	75	249	21,710
1994	785	46	8,212	363	0	9,406	9,694	1,013	104	0	45	10,856
1995	493	299	6,850	23	88	7,753	4,678	423	101	0	174	5,376
1996	7	40	749	1	8	805	1,731	119	1	29	16	1,896
1997	7	95	189	0	17	308	484	172	0	0	16	672
1998	11	19	5	0	0	35	509	33	0	0	0	542
1999	0	34	7	0	4	45	58	62	0	0	5	125
2000	–	–	–	–	–	–	–	–	–	–	–	–
2001	–	–	–	–	–	–	–	–	–	–	–	–
2002	–	–	–	–	–	–	–	–	–	–	–	–
2003	–	–	–	–	–	–	–	–	–	–	–	–
2004	–	–	–	–	–	–	–	–	–	–	–	–
2005	–	–	–	–	–	–	–	–	–	–	–	–
2006	–	–	–	–	–	–	–	–	–	–	–	–
2007	–	–	–	–	–	–	–	–	–	–	–	–

	CFC-113						CFC-114					
	Refrigerant	Aerosol	Foaming agent	Detergent	Other	Total	Refrigerant	Aerosol	Foaming agent	Detergent	Other	Total
1985	155	143	197	54,749	1,544	56,788	130	131	1,382	0	10	1,653
1986	144	159	176	62,182	917	63,578	134	150	1,318	0	11	1,613
1987	130	171	251	76,707	2	77,261	117	542	1,871	0	0	2,530
1988	115	23	276	79,968	3	80,385	141	401	2,057	0	60	2,659
1989	108	227	210	82,927	19	83,491	161	588	1,975	0	14	2,738
1990	168	160	224	57,177	75	57,804	57	41	1,424	0	0	1,522
1991	70	81	246	50,371	0	50,768	179	24	1,465	0	1	1,669
1992	93	9	274	26,462	0	26,838	194	17	690	0	1	902
1993	72	9	31	11,655	34	11,801	193	15	246	0	1	455
1994	204	4	21	10,709	4	10,942	43	15	17	0	256	331
1995	13	0	48	11,654	52	11,767	22	19	5	0	191	237
1996	0	0	0	1,598	179	1,777	24	12	0	0	4	40
1997	0	0	0	281	22	303	0	55	0	0	0	55
1998	0	0	0	91	0	91	0	0	0	0	0	0
1999	0	0	0	14	1	15	0	0	0	0	0	0
2000	–	–	–	–	–	–	–	–	–	–	–	–
2001	–	–	–	–	–	–	–	–	–	–	–	–
2002	–	–	–	–	–	–	–	–	–	–	–	–
2003	–	–	–	–	–	–	–	–	–	–	–	–
2004	–	–	–	–	–	–	–	–	–	–	–	–
2005	–	–	–	–	–	–	–	–	–	–	–	–
2006	–	–	–	–	–	–	–	–	–	–	–	–
2007	–	–	–	–	–	–	–	–	–	–	–	–

	CFC-115						CFC Total					
	Refrigerant	Aerosol	Foaming agent	Detergent	Other	Total	Refrigerant	Aerosol	Foaming agent	Detergent	Other	Total
1985	93	0	0	0	2	95	21,351	11,616	28,143	54,949	1,996	118,055
1986	119	0	0	0	11	130	24,409	11,905	31,997	62,487	2,127	132,925
1987	610	0	0	0	0	610	26,375	12,266	38,735	77,210	986	155,572
1988	616	0	0	0	9	625	23,928	12,043	39,680	81,204	2,365	159,220
1989	601	0	0	0	0	601	28,801	11,207	35,332	84,083	1,298	160,721
1990	686	0	0	0	0	686	21,835	4,782	26,529	57,588	476	111,210
1991	728	0	0	0	1	729	18,628	3,302	21,822	51,165	661	95,578
1992	679	0	0	0	1	680	18,007	1,611	13,583	27,027	376	60,604
1993	409	0	0	0	0	409	23,088	1,133	9,095	12,261	298	45,875
1994	214	0	0	0	0	214	10,940	1,078	8,354	11,072	305	31,749
1995	335	0	0	0	0	335	5,541	741	7,004	11,677	505	25,468
1996	39	0	0	0	0	39	1,801	171	750	1,628	207	4,557
1997	6	0	0	0	0	6	497	322	189	281	55	1,344
1998	0	0	0	0	0	0	520	52	5	91	0	668
1999	0	0	0	14	1	15	58	96	7	28	11	200
2000	–	–	–	–	–	–	40	0	0	5	26	71
2001	–	–	–	–	–	–	0	0	0	0	0	0
2002	–	–	–	–	–	–	0	0	0	0	0	0
2003	–	–	–	–	–	–	0	0	0	0	0	0
2004	–	–	–	–	–	–	0	0	0	0	0	0
2005	–	–	–	–	–	–	0	0	0	0	0	0
2006	–	–	–	–	–	–	0	0	0	0	0	0
2007	–	–	–	–	–	–	0	0	0	0	0	0

Note: In 2000 and 2007, calculation method has been changed, and now only total shipment volumes of CFC, HCFC, and HFC are shown.

2.09 Shipping volume of CFC in Japan (2)

Shipment volume of HCFC (* Hydro Chlorofluorocarbon = CFC) (Unit : in 1,000 tons)

	HCFC-22						HCFC-141b					
	Refrigerant	Aerosol	Foaming agent	Detergent	Other	Total	Refrigerant	Aerosol	Foaming agent	Detergent	Other	Total
1995	30.6	–	0.8	0.0	0.1	31.5	0.0	–	8.6	2.1	0.0	10.7
1996	31.7	–	0.6	0.0	0.3	32.6	0.0	–	13.5	3.2	0.1	16.8
1997	28.4	–	0.5	0.0	1.5	30.4	0.0	–	14.8	3.0	0.0	17.8
1998	27.5	–	0.4	0.0	1.6	29.5	0.0	–	12.9	3.3	–	16.2
1999	26.8	–	0.3	0.0	1.7	28.8	0.0	–	11.9	4.0	–	15.9
2000	24.0	–	0.0	–	2.0	26.0	0.0	–	11.0	3.0	0.0	15.0
2001	21.6	–	0.2	0.0	1.2	23.0	0.0	–	9.3	3.0	0.2	12.5
2002	15.6	–	0.2	0.0	0.7	16.5	0.0	–	9.3	3.0	0.0	12.4
2003	13.7	–	0.1	0.0	1.2	15.0	0.0	–	11.5	3.0	0.0	14.5
2004	12.7	0.0	0.0	0.0	1.2	14.0	0.0	0.0	0.7	2.3	0.0	3.1
2005	10.8	0.0	0.0	0.0	1.2	12.0	0.0	0.0	0.0	2.3	0.0	2.3
2006	9.1	0.0	0.0	0.0	0.1	9.2	0.0	0.0	0.0	2.5	0.0	2.5
2007	–	–	–	–	–	–	–	–	–	–	–	–

	HCFC-142b						HCFC-225					
	Refrigerant	Aerosol	Foaming agent	Detergent	Other	Total	Refrigerant	Aerosol	Foaming agent	Detergent	Other	Total
1995	0.0	–	3.7	0.0	0.1	3.8	0.0	–	0.0	1.2	0.0	1.2
1996	0.0	–	3.9	0.0	0.1	4.0	0.0	–	0.0	2.0	0.0	2.0
1997	0.0	–	3.8	0.0	0.2	4.1	0.0	–	0.0	2.8	0.0	2.8
1998	0.0	–	3.4	0.0	0.2	3.6	0.0	–	0.0	2.6	0.0	2.6
1999	–	–	3.7	0.0	0.7	4.4	0.0	–	0.0	3.0	0.1	3.1
2000	–	–	–	–	–	–	–	–	–	–	–	–
2001	–	–	–	–	–	–	–	–	–	–	–	–
2002	–	–	–	–	–	–	–	–	–	–	–	–
2003	–	–	–	–	–	–	–	–	–	–	–	–
2004	–	–	–	–	–	–	–	–	–	–	–	–
2005	–	–	–	–	–	–	–	–	–	–	–	–
2006	–	–	–	–	–	–	–	–	–	–	–	–
2007	–	–	–	–	–	–	–	–	–	–	–	–

	HCFC-123						HCFC-124					
	Refrigerant	Aerosol	Foaming agent	Detergent	Other	Total	Refrigerant	Aerosol	Foaming agent	Detergent	Other	Total
1995	0.5	–	0.0	0.0	0.0	0.5	0.0	–	0.0	0.0	0.0	0.0
1996	0.5	–	0.0	0.0	0.0	0.5	0.0	–	0.0	0.0	0.0	0.0
1997	0.4	–	0.0	0.0	0.0	0.4	0.0	–	0.0	0.0	0.0	0.0
1998	0.4	–	0.0	–	–	0.4	–	–	0.0	0.0	–	–
1999	0.3	–	–	0.0	–	0.3	–	–	0.1	0.0	0.0	0.1
2000	–	–	–	–	–	–	–	–	–	–	–	–
2001	–	–	–	–	–	–	–	–	–	–	–	–
2002	–	–	–	–	–	–	–	–	–	–	–	–
2003	–	–	–	–	–	–	–	–	–	–	–	–
2004	–	–	–	–	–	–	–	–	–	–	–	–
2005	–	–	–	–	–	–	–	–	–	–	–	–
2006	–	–	–	–	–	–	–	–	–	–	–	–
2007	–	–	–	–	–	–	–	–	–	–	–	–

	HCFC-142b,225,123,124 Total						HCFC Total					
	Refrigerant	Aerosol	Foaming agent	Detergent	Other	Total	Refrigerant	Aerosol	Foaming agent	Detergent	Other	Total
1995	0.5	–	3.7	1.2	0.1	5.5	31.1	–	13.1	3.3	0.2	47.7
1996	0.5	–	3.9	2.0	0.1	6.5	32.2	–	18.0	5.2	0.5	55.9
1997	0.4	–	3.9	2.8	0.2	7.3	28.8	–	19.2	5.8	1.7	55.5
1998	0.4	–	3.4	2.6	0.2	6.6	27.9	–	16.7	5.9	1.8	52.3
1999	0.3	–	3.8	3.0	0.8	7.9	27.1	–	16.0	7.0	2.5	52.6
2000	0.0	–	4.0	3.0	1.0	7.0	25.0	–	15.0	6.0	2.0	48.0
2001	0.3	–	3.5	2.2	0.7	6.7	21.9	–	13.0	5.2	2.0	42.1
2002	0.2	–	2.9	2.0	0.1	5.2	15.8	–	12.3	5.0	0.8	34.1
2003	0.2	–	1.4	1.6	0.2	3.4	13.9	–	13.0	4.6	1.4	32.9
2004	0.2	0.1	0.4	2.8	0.0	3.4	12.9	0.1	1.1	5.1	1.3	20.5
2005	0.2	0.1	0.0	2.3	0.2	2.8	11.0	0.1	0.0	4.6	1.4	17.1
2006	0.2	0.1	0.0	1.3	0.1	1.7	9.3	0.1	0.0	3.8	0.1	13.3
2007	–	–	–	–	–	–	8.0	0.1	0.0	3.4	0.3	11.8

Note: In 2000 and 2007, calculation method has been changed, and now only total shipment volumes of CFC, HCFC, and HFC are shown.

2.09 Shipping volume of CFC in Japan (3)

Shipment volume of HFC (* Hydro Fluorocarbon = HFC) (Unit : in 1,000 tons)

	HFC-134a						Other HFC					
	Refrigerant	Aerosol	Foaming agent	Detergent	Other	Total	Refrigerant	Aerosol	Foaming agent	Detergent	Other	Total
1995	7.8	1.2	0.3	0.0	0.0	9.3	0.1	0.0	0.0	0.0	0.1	0.2
1996	8.6	1.8	0.4	0.0	0.0	10.8	0.1	0.0	0.0	0.0	0.1	0.2
1997	8.9	2.2	0.4	0.0	0.0	11.5	0.2	0.0	0.0	0.0	0.2	0.4
1998	8.4	2.5	0.5	0.0	0.0	11.4	0.4	0.0	0.0	0.2	0.3	0.9
1999	9.6	3.1	0.6	0.0	0.2	13.5	1.0	0.0	–	–	0.2	1.2
2000	–	–	–	–	–	–	–	–	–	–	–	–
2001	–	–	–	–	–	–	–	–	–	–	–	–
2002	–	–	–	–	–	–	–	–	–	–	–	–
2003	–	–	–	–	–	–	–	–	–	–	–	–
2004	–	–	–	–	–	–	–	–	–	–	–	–
2005	–	–	–	–	–	–	–	–	–	–	–	–
2006	–	–	–	–	–	–	–	–	–	–	–	–
2007	–	–	–	–	–	–	–	–	–	–	–	–

	HFC Total					
	Refrigerant	Aerosol	Foaming agent	Detergent	Other	Total
1995	7.9	1.2	0.3	0.0	0.1	9.5
1996	8.7	1.8	0.4	0.0	0.1	11.0
1997	9.1	2.2	0.4	0.0	0.2	11.9
1998	8.8	2.5	0.5	0.2	0.3	12.3
1999	10.6	3.1	0.6	0.0	0.4	14.7
2000	11.0	3.0	1.0	0.0	1.0	16.0
2001	14.0	2.9	0.7	0.0	0.2	17.9
2002	18.0	3.1	0.8	0.1	0.5	22.5
2003	19.2	2.9	1.5	0.1	0.5	24.2
2004	21.0	2.4	3.3	0.3	0.5	27.5
2005	22.8	2.3	5.2	0.3	0.1	30.7
2006	23.5	2.0	7.6	0.8	0.3	34.1
2007	24.9	1.4	6.9	0.8	0.2	34.3

Note: In 2000 and 2007, calculation method has been changed, and now only total shipment volumes of CFC, HCFC, and HFC are shown.

Source: "The Annual Report of Ozone Monitoring result in the FY 2011," Ministry of the Environment

2.10 Production and consumption volumes of HCFC in Japan

(Unit: ODP ton) [1)]

	Production	Consumption [2)]
Basis volume [3)]		5,562
January 1996 – December 1996		4,141
January 1997 – December 1997		4,152
January 1998 – December 1998	3,966	3,633
January 1999 – December 1999	4,608	3,899
January 2000 – December 2000	3,928	3,531
January 2001 – December 2001	3,792	3,500
January 2002 – December 2002	3,195	2,907
January 2003 – December 2003	3,145	2,810
January 2004 – December 2004	1,921	1,473
January 2005 – December 2005	1,344	1,118
January 2006 – December 2006	872	747
January 2007 – December 2007	728	770
January 2008 – December 2008	777	787
January 2009 – December 2009	494	518
January 2010 – December 2010	400	453
January 2011 – December 2011	397	470
January 2012 – December 2012	297	342
January 2013 – December 2013	294	335
January 2014 – December 2014	252	283
January 2015 – December 2015	213	255

Notes:
1) ODP ton is a sum of production and consumption amounts of each HCFC substance multiplied by relevant ozone depletion potential (ODP).
2) Consumption = production + import – export
3) Basis volume of HCFC consumption = "the estimated consumption of HCFC in 1989" + "the estimated consumption of CFC in 1989" × 0.028

Source: "The Annual Report of Result of Ozone Monitoring in 2015," Ministry of the Environment, and a web page of Ministry of Economy, Trade and Industry

2.11 Changes in production volume of major CFCs in the world

(Unit: t)

Year	CFC-11	CFC-12	CFC-113	CFC-114	CFC-115	HCFC-22	HCFC-124	HCFC-141b	HCFC-142b	HFC-134a	HFC-125	HFC-143a
1931～1935	90	2,676										
1936～1940	590	16,102										
1941～1945	1,724	57,244										
1946～1950	16,149	122,244										
1951	9,072	36,242										
1952	13,562	37,240										
1953	17,282	46,493										
1954	20,911	49,124										
1955	26,263	57,606										
1956	32,477	68,674										
1957	33,929	74,163										
1958	29,529	73,437										
1959	35,562	87,589										
1960	49,714	99,428										
1961	60,464	108,499										
1962	78,109	128,095										
1963	93,304	146,420										
1964	111,085	170,097										
1965	122,833	190,056										
1966	141,022	216,182										
1967	159,756	242,763										
1968	183,116	267,484										
1969	217,271	297,285										
1970	238,136	321,099				56,071						
1971	263,175	341,556				60,582						
1972	306,856	379,884				63,250						
1973	349,085	423,338				74,346						
1974	369,724	442,798				83,390						
1975	314,068	380,973				74,989						
1976	339,832	410,729				90,706						
1977	320,464	382,833				101,375						
1978	308,852	372,082				111,662						
1979	289,483	357,159	*1 706,830	*1 319,830	*1 57,533	117,892						
1980	289,619	350,219	103,667	14,994	9,342	126,323						
1981	286,943	351,308	108,536	14,011	9,955	130,811			2,587			
1982	271,443	328,039	112,987	13,580	10,366	123,616			1,898			
1983	291,731	355,331	132,743	14,774	11,629	143,881			2,204			
1984	312,355	382,107	171,122	15,573	11,221	152,356			2,352			
1985	326,814	376,339	187,011	17,091	10,036	153,432			1,370			
1986	350,148	398,363	196,614	19,101	11,818	164,993			7,121			
1987	382,050	424,726	225,812	17,098	12,772	173,304			6,883			
1988	375,986	421,002	247,444	16,483	13,550	203,545			7,841			
1989	302,489	379,778	251,326	14,963	14,191	219,537			10,288			
1990	232,916	230,950	174,801	8,311	11,347	213,714		99	18,757	189		
1991	213,486	224,805	147,625	6,658	12,276	236,812	17	1,507	27,154	2,198		
1992	186,434	216,207	107,507	4,691	10,711	245,715	99	13,254	30,691	6,404		
1993	147,131	214,664	48,037	4,576	11,411	240,619	532	43,291	33,682	26,526		
1994	60,232	133,600	29,547	3,207	6,834	239,444	897	81,231	38,361	50,400		
1995	32,683	82,822	23,321	3,135	3,651	243,468	3,078	113,154	38,711	73,769		
1996	22,123	48,856	6,007	713	2,019	267,523	4,834	121,085	37,736	83,674	*2 0	*2 794
1997	18,577	32,900	3,008	1,196	836	246,937	4,143	122,356	40,197	97,949	296	339
1998	14,600	33,269	1,589	1,199	922	271,980	5,181	129,037	38,771	112,174	698	557
1999	12,871	27,132	1,000	292	396	248,552	2,776	130,415	40,166	131,710	1,243	750
2000	9,900	24,564	942	505	213	239,197	3,131	132,476	40,517	130,056	7,400	5,396
2001	8,311	20,873	787	280	237	213,328	2,064	121,757	33,616	133,956	12,583	9,151
2002	6,795	20,181	917	608	145	193,955	2,736	116,673	21,417	156,987	16,190	9,656
2003	3,145	12,536	599	336	37	187,262	2,765	74,596	19,685	166,899	22,631	12,972
2004	2,043	8,938	-	1,114	-	189,545	2,529	40,417	21,539	173,851	32,734	14,053
2005	-	-	-	-	-	176,373	1,878	25,619	22,112	169,999	31,819	16,321
2006	-	-	-	-	-	165,478	2,134	22,548	22,257	156,573	38,537	16,257
2007	-	-	-	-	-	165,862	2,120	21,835	33,779	158,161	42,573	18,325
Total	8,714,314	11,507,103	-	514,319	-	6,411,825	40,914	1,311,350	601,693	1,831,475	206,704	103,776

Note:
*1 The sum up to 1979.
*2 The sum up to 1996.
The data and the total of CFC-113 and CFC-115 in 2004 and 2005 are not published.
The data and the total of CFC-11, CFC-12, and CFC-114 in 2005 are not published.

Source: "The Alternative Fluorocarbons Environmental Acceptability Study," AFEAS

2.12 Emissions of Ozone Depleting Substances on PRTR basis

(Unit: t)

Substance		Emissions notified [1]		Emissions outside notification [2]	Total emissions	Transferred amount notified [3]
		Air	Public Water Areas			
CFC	FY2003	51	1	3,526	3,578	65
	2004	80	1	2,577	2,659	48
	2005	49	2	1,815	1,866	109
	2006	38	1	1,490	1,529	77
	2007	23	0	1,227	1,250	98
	2008	19	1	1,353	1,372	51
	2009	32	0	1,197	1,230	58
	2010	17	0	2,330	2,348	2
	2011	9	0	2,177	2,186	5
	2012	10	0	2,046	2,056	6
	2013	9	0	1,522	1,531	2
	2014	13	0	1,478	1,491	20
	2015	7	0	1,390	1,396	0
Halon	FY2003	7	0	13	20	0
	2004	9	0	19	28	14
	2005	12	0	12	24	4
	2006	8	0	13	22	4
	2007	11	0	15	26	2
	2008	11	0	13	24	2
	2009	13	0	9	23	2
	2010	27	0	11	38	1
	2011	15	0	13	28	10
	2012	10	0	5	15	0
	2013	11	0	11	22	2
	2014	6	0	7	13	0
	2015	6	0	10	16	0
HCFC	FY2003	3,953	2	15,571	19,526	451
	2004	2,867	2	14,961	17,831	409
	2005	2,429	3	15,545	17,977	352
	2006	2,088	0	15,262	17,350	353
	2007	1,910	0	14,413	16,323	357
	2008	1,570	0	20,384	21,953	303
	2009	1,306	0	18,283	19,589	280
	2010	1,184	0	18,639	19,823	172
	2011	1,009	0	17,069	18,079	117
	2012	912	0	15,726	16,638	149
	2013	973	0	12,982	13,956	152
	2014	824	0	11,727	12,552	160
	2015	739	0	10,005	10,744	203
Carbon tetrachloride	FY2003	46	1	0	47	166
	2004	22	1	0	22	211
	2005	7	1	0	8	244
	2006	15	1	0	16	227
	2007	9	1	0	9	411
	2008	6	0	0	6	229
	2009	6	0	0	7	170
	2010	7	0	0	7	391
	2011	7	0	0	7	198
	2012	7	0	0	7	325
	2013	7	0	0	7	289
	2014	6	0	0	6	290
	2015	6	0	0	6	260
1, 1, 1-trichloroethane	FY2003	21	21	0	42	23
	2004	20	14	0	35	32
	2005	16	14	0	30	9
	2006	9	13	0	22	17
	2007	8	9	0	17	19
	2008	8	11	0	19	18
	2009	3	11	0	13	0
	2010	4	11	0	14	1
	2011	0	12	0	13	0
	2012	0	14	0	14	0
	2013	0	14	0	15	0
	2014	0	16	0	17	0
	2015	1	16	0	17	0
Methyl bromide	FY2003	559	0	2,666	3,225	23
	2004	475	0	2,631	3,105	19
	2005	413	0	2,747	3,159	10
	2006	329	0	1,493	1,821	5
	2007	279	0	1,343	1,622	7
	2008	217	0	1,054	1,271	8
	2009	222	0	855	1,078	5
	2010	223	0	681	904	7
	2011	181	0	700	881	6
	2012	147	0	690	838	6
	2013	127	0	488	615	6
	2014	119	0	443	563	8
	2015	114	0	377	492	8

Notes:

1) The amount of emissions released into the environment over a year from business entities subject to PRTR, which was notified to the state by them.

2) The state's estimated amount of emissions released from business entities not subject to PRTR.

3) The carried-away amount as waste from business entities subject to PRTR.

Source: "PRTR Data Overview (FY 2003 to 2015)," Ministry of the Environment

2.13 Chronological changes in Background Concentration of Specified Substances in the Atmosphere in Hokkaido (1)

Sampling period		CFC-11		CFC-12		CFC-113		CFC-114		CFC-115		Halon 1211		Halon 1301	
		Concentra -tion	Standard deviation	Concentra -tion	Standard deviation	Concentra -tion	Standard deviation	Concentra -tion	Standard deviation	Concentra -tion	Standard deviation	Concentra -tion	Standard deviation	Concentra -tion	Standard deviation
1989	Jan	246	4	500	1	74	1	14.3	0.30	5.30	0.10	2.40	0.120	1.90	0.030
	Mar	247	2	501	7	76	1	14.3	0.20	5.80	0.10	2.50	0.041	1.90	0.050
	Oct	254	6	509	8	85	3	14.6	0.20	5.70	0.30	2.70	0.070	2.00	0.100
1990	Jan	255	3	504	4	75	2	14.7	0.20	6.00	0.30	2.70	0.040	2.10	0.060
	Mar	252	3	503	3	75	1	14.8	0.10	5.90	0.10	2.80	0.010	2.10	0.020
	Oct	264	6	509	2	79	1	14.8	0.10	6.20	0.30	2.80	0.040	2.20	0.040
1991	Jan	264	4	510	2	79	1	14.8	0.10	6.20	0.50	2.90	0.080	2.20	0.030
	Mar	264	3	511	4	81	1	14.9	0.30	6.30	0.30	2.90	0.050	2.30	0.050
	Aug	262	2	516	5	80	1	14.7	0.10	6.40	0.10	2.90	0.050	2.20	0.020
1992	Jan	266	5	520	3	84	1	14.9	0.30	6.60	0.20	3.10	0.080	2.40	0.020
	Mar	267	2	519	5	85	2	15.1	0.10	6.50	0.10	3.20	0.100	2.40	0.060
	Aug	270	4	525	2	87	-	15.0	0.10	7.10	0.40	3.20	0.030	2.40	0.070
1993	Jan	271	6	530	3	85	1	14.9	0.20	7.00	0.20	3.40	0.070	2.60	0.030
	Mar	264	2	526	6	86	1	15.0	0.30	7.10	0.10	3.40	0.080	2.60	0.060
	Aug	264	2	529	3	85	1	15.0	0.10	7.20	0.30	3.30	0.030	2.60	0.020
1994	Jan	269	3	537	5	86.1	-	15.1	0.22	7.58	0.37	3.52	0.120	2.70	0.014
	Mar	266	6	534	3	86.3	0.9	15.1	0.32	7.51	0.40	3.54	0.041	2.64	0.062
	Jul	266	7	539	4	86.5	1.7	15.1	0.25	7.57	0.24	3.58	0.074	2.68	0.051
1995	Jan	266	2	541	5	86.2	1.5	15.0	0.20	7.61	0.23	3.67	0.080	2.72	0.050
	Mar	265	3	543	4	86.0	2.0	15.1	0.35	7.67	0.19	3.75	0.054	2.74	0.045
	Aug	262	4	543	5	86.2	1.4	15.0	0.20	7.76	0.11	3.78	0.100	2.74	0.089
1996	Jan	262	1	541	4	84.5	1.2	15.2	0.16	7.89	0.09	3.88	0.042	2.80	0.071
	Mar	262	2	541	4	85.4	1.1	15.2	0.16	8.04	0.29	3.87	0.090	2.82	0.058
	Aug	265	3	542	4	84.4	2.1	15.0	0.21	8.04	0.18	3.91	0.083	2.79	0.019
1997	Jan	261	1	549	3	84.9	1.6	15.2	0.12	8.38	0.08	4.02	0.099	2.86	0.039
	Mar	261	2	548	3	84.1	0.6	15.2	0.21	8.32	0.07	4.00	0.044	2.83	0.031
	Aug	263	3	552	6	84.5	1.2	15.0	0.34	8.33	0.03	4.08	0.094	2.87	0.046
1998	Jan	257	3	548	4	84.6	0.7	15.2	0.11	8.27	0.39	4.20	0.050	2.94	0.077
	Mar	256	1	547	4	84.6	0.4	15.2	0.22	8.56	0.12	4.25	0.079	2.96	0.069
	Aug	260	4	552	2	83.6	1.1	15.3	0.21	8.64	0.19	4.20	0.048	2.86	0.048
1999	Feb	256	3	546	1	82.6	0.9	15.1	0.16	8.36	0.29	4.34	0.030	2.94	0.064
	Mar	256	3	548	4	83.4	2.1	15.2	0.26	8.56	0.48	4.26	0.058	2.90	0.043
	Aug	258	4	547	3	83.3	0.7	15.2	0.26	8.55	0.13	4.31	0.025	2.90	0.034
2000	Jan	251	2	551	4	82.7	1.4	15.2	0.10	8.48	0.13	4.43	0.056	2.93	0.032
	Mar	253	3	550	2	82.9	1.3	15.2	0.15	8.58	0.25	4.40	0.073	2.94	0.058
	Aug	255	2	551	2	81.3	0.6	15.0	0.10	8.44	0.10	4.51	0.029	2.99	0.036
2001	Jan	255	2	551	4	82.4	0.7	15.1	0.15	8.56	0.22	4.60	0.047	3.04	0.024
	Mar	253	2	549	3	82.5	0.7	15.2	0.10	8.48	0.16	4.56	0.059	3.03	0.034
	Aug	254	1	549	2	81.4	0.7	15.1	0.21	8.65	0.17	4.58	0.077	3.08	0.034
2002	Jan	253	1	550	2	80.5	0.5	15.2	0.25	8.72	0.16	4.62	0.039	3.12	0.010
	Mar	252	1	550	2	80.8	0.2	15.0	0.16	8.70	0.12	4.68	0.026	3.11	0.062
	Aug	251	1	551	1	80.8	1.1	15.1	0.19	8.79	0.22	4.60	0.061	3.12	0.048
2003	Jan	250	1	551	4	79.6	0.7	15.2	0.19	8.83	0.23	4.73	0.061	3.16	0.021
	Mar	249	2	549	2	80.6	0.5	15.2	0.14	8.79	0.25	4.69	0.052	3.18	0.028
	Aug	247	1	554	2	79.7	0.2	15.1	0.15	8.90	0.20	4.68	0.015	3.22	0.025
2004	Jan	247	2	550	2	79.3	0.4	14.9	0.08	8.82	0.23	4.71	0.058	3.26	0.027
	Mar	247	1	550	3	79.7	0.4	15.0	0.06	8.87	0.19	4.69	0.022	3.27	0.013
	Aug	246	1	548	4	79.4	0.4	14.9	0.18	8.85	0.24	4.70	0.029	3.26	0.016
2005	Jan	246	1	549	1	78.8	0.5	14.9	0.23	8.86	0.16	4.74	0.029	3.30	0.022
	Mar	246	1	549	1	79.0	0.4	15.0	0.08	8.87	0.23	4.78	0.020	3.30	0.018
	Aug	244	1	549	2	78.9	0.3	15.0	0.10	8.89	0.13	4.73	0.010	3.29	0.021
2006	Jan	244	1	548	2	78.3	0.3	15.1	0.10	8.93	0.11	4.76	0.031	3.32	0.018
	Mar	244	1	549	1	78.7	0.6	15.0	0.04	8.92	0.08	4.77	0.028	3.32	0.013
	Aug	242	1	549	3	78.1	0.5	15.0	0.18	8.92	0.13	4.75	0.069	3.33	0.020
2007	Jan	244	2	549	4	76.4	0.4	15.1	0.12	8.91	0.08	4.71	0.024	3.34	0.044
	Aug	243	2	545	2	76.1	0.6	14.8	0.25	9.02	0.11	4.65	0.038	3.35	0.030
2008	Jan	241	1	544	2	77.1	0.5	14.9	0.31	9.09	0.16	4.68	0.085	3.36	0.006
	Aug	238	2	544	3	76.4	0.2	14.9	0.10	8.96	0.08	4.56	0.032	3.37	0.014
2009	Jan	238	1	543	2	77.2	0.2	15.0	0.10	8.90	0.07	4.61	0.040	3.40	0.008
	Aug	236	1	539	1	76.3	0.3	14.9	0.12	8.96	0.17	4.51	0.028	3.37	0.023
2010	Jan	236	1	539	1	76.3	0.5	15.0	0.04	8.96	0.10	4.48	0.021	3.40	0.012
	Aug	233	1	537	1	75.4	0.3	15.0	0.19	8.96	0.09	4.42	0.013	3.43	0.014
	Dec	233	1	536	1	75.6	0.3	14.9	0.08	8.95	0.10	4.43	0.008	3.44	0.024
2011	Aug	233	2	534	1	75.0	0.3	14.9	0.09	8.97	0.16	4.36	0.016	3.51	0.021
	Dec	232	2	535	2	74.9	0.2	14.8	0.07	8.90	0.08	4.37	0.019	3.48	0.016
2012	Aug	230	1	531	1	74.3	0.4	14.8	0.05	8.95	0.14	4.24	0.042	3.46	0.039
	Dec	230	1	532	2	74.5	0.2	14.8	0.05	8.95	0.13	4.22	0.010	3.46	0.021
2013	Aug	228	1	529	1	74.2	0.4	14.8	0.00	8.84	0.04	4.14	0.020	3.50	0.020
	Dec	228	1	528	3	73.8	0.4	14.8	0.07	8.86	0.13	4.11	0.010	3.49	0.020
2014	Aug	226	2	526	2	73.8	0.2	14.8	0.06	8.91	0.14	4.03	0.030	3.51	0.020
	Dec	227	1	526	2	73.6	0.2	14.8	0.12	8.88	0.15	4.02	0.020	3.52	0.030
2015	Aug	228	2	509	4	71.1	1.9	15.7	0.17	8.21	0.11	3.72	0.220	3.45	0.080
	Dec	226	1	506	4	73.7	1.5	15.4	0.14	9.05	0.11	3.73	0.030	3.45	0.030

Note:
The figures are averages of measurement for each month (in principle, n = 6, n is the number of samples per 1 plot). For some substances, concentrations are indicated down to the three decimal places, however, they don't necessarily mean to be significant digits.

2.13 Chronological changes in Background Concentration of Specified Substances in the Atmosphere in Hokkaido (2)

Sampling period		Halon 2402		1, 1, 1-trichloroethane		Carbon terachloride		HCFC-22		HCFC-142b		Methyl bromide		HCFC-134a	
		Concentra-tion	Standard deviation	Concentra-tion	Standard deviation	Concentra-tion	Standard deviation	Concentra-tion	Standard deviation	Concentra-tion	Standard deviation	Concentra-tion	Standard deviation	Concentra-tion	Standard deviation
1989	Jan	0.45	0.020	165.0	2	-	-	-	-	-	-	-	-	-	-
	Mar	0.47	0.010	166.0	4	-	-	-	-	-	-	-	-	-	-
	Oct	0.46	0.010	178.0	13	114.0	4.0	-	-	-	-	-	-	-	-
1990	Jan	0.47	0.030	176.0	6	112.0	5.0	-	-	-	-	-	-	-	-
	Mar	0.48	0.020	175.0	2	106.0	1.0	-	-	-	-	-	-	-	-
	Oct	0.50	0.020	179.0	12	111.0	4.0	-	-	-	-	-	-	-	-
1991	Jan	0.49	0.020	176.0	2	111.0	1.0	-	-	-	-	-	-	-	-
	Mar	0.48	0.020	177.0	2	108.0	1.0	-	-	-	-	-	-	-	-
	Aug	0.48	0.010	172.0	8	116.0	4.0	-	-	-	-	-	-	-	-
1992	Jan	0.51	0.020	177.0	3	113.0	3.0	-	-	-	-	-	-	-	-
	Mar	0.52	0.020	177.0	1	111.0	1.0	-	-	-	-	-	-	-	-
	Aug	0.52	0.030	177.0	4	116.0	2.0	111	2	4.50	0.70	-	-	-	-
1993	Jan	0.51	0.010	177.0	10	110.0	2.0	112	6	5.40	0.40	-	-	-	-
	Mar	0.54	-	174.0	9	113.0	4.0	114	7	5.40	0.40	-	-	-	-
	Aug	0.50	0.010	146.0	4	110.0	5.0	114	5	6.30	0.70	-	-	-	-
1994	Jan	0.52	0.023	147.0	6	105.0	2.0	120	5	7.00	0.54	-	-	-	-
	Mar	0.51	0.028	143.0	2	109.0	2.0	121	2	6.61	0.27	-	-	-	-
	Jul	0.53	0.012	144.0	11	108.0	2.0	120	3	7.45	1.10	-	-	-	-
1995	Jan	0.54	0.006	129.0	2	104.0	3	123	4	7.78	0.68	-	-	-	-
	Mar	0.53	0.015	130.0	2	105.0	3	124	2	7.68	0.38	-	-	-	-
	Aug	0.54	-	120.0	2	-	-	125	4	8.52	0.64	-	-	-	-
1996	Jan	0.54	-	112.0	1	-	-	128	3	8.94	0.96	-	-	-	-
	Mar	0.54	0.013	111.0	2	-	-	127	5	9.60	0.43	-	-	-	-
	Aug	0.53	0.013	102.0	7	104.0	1	133	5	9.94	0.86	-	-	-	-
1997	Jan	0.53	-	95.6	0.7	-	-	134	3	9.88	0.40	-	-	-	-
	Mar	0.54	-	95.4	0.4	107.0	1	133	5	10.0	1.1	-	-	-	-
	Aug	0.54	0.016	88.3	4.3	110.0	5	137	3	10.4	2.1	-	-	-	-
1998	Jan	0.53	-	78.1	1.8	106.0	4	136	2	11.2	0.59	-	-	-	-
	Mar	0.52	0.012	76.0	1.5	106.0	3	138	3	10.8	1.1	11.2	0.52	-	-
	Aug	0.53	0.029	76.5	1.5	108.0	2	142	3	11.6	0.57	11.7	0.55	-	-
1999	Feb	-	-	70.1	1.6	103.0	1	150	2	12.0	0.43	11.2	0.59	-	-
	Mar	0.53	0.036	71.5	1.6	108.0	3	150	2	12.2	0.59	10.6	0.00	-	-
	Aug	0.52	0.020	64.2	0.8	110.0	4	149	7	11.5	0.45	10.4	0.68	-	-
2000	Jan	0.53	0.018	58.7	0.7	103.0	2	150	3	13.2	0.39	9.4	0.35	-	-
	Mar	0.51	0.018	57.5	1.9	106.0	1	150	1	12.8	1.1	9.5	0.78	-	-
	Aug	0.52	0.021	50.1	1.5	108.0	1.3	153	2	13.4	0.64	10.0	0.65	17.0	0.45
2001	Jan	0.51	0.028	50.4	0.5	105.0	0.5	157	2	14.4	0.26	9.2	0.39	20.1	1.00
	Mar	0.51	0.018	50.7	0.5	105.0	1.4	158	2	14.1	0.55	10.2	0.90	19.5	1.20
	Aug	0.50	0.013	43.0	0.7	105.0	0.8	157	3	14.1	0.17	9.4	0.99	21.3	0.60
2002	Jan	0.50	0.028	37.6	0.1	104.0	0.8	158	2	15.3	0.47	9.5	0.52	24.1	0.98
	Mar	0.51	0.026	37.1	0.2	104.0	0.8	158	2	15.4	0.47	8.9	0.33	24.4	1.30
	Aug	0.50	0.027	35.7	0.6	106.0	1.0	163	2	15.2	0.59	10.0	0.56	25.8	0.42
2003	Jan	0.51	0.020	32.5	0.4	104.0	2.1	166	1	15.4	0.64	9.5	0.11	29.4	0.84
	Mar	0.50	0.012	31.8	0.8	103.0	0.4	163	1	15.9	0.58	9.5	0.28	28.9	2.00
	Aug	0.50	0.018	28.4	0.4	100.0	0.7	168	3	15.5	0.64	9.6	0.80	30.7	1.00
2004	Jan	0.50	0.004	26.6	0.3	99.5	0.8	168	1	15.9	0.44	10.3	0.62	32.3	1.10
	Mar	0.50	0.024	26.6	0.4	99.3	0.8	169	1	16.5	0.32	9.6	0.51	33.1	0.58
	Aug	0.49	0.013	23.8	0.6	99.0	0.7	171	2	16.6	0.18	9.4	0.39	34.8	1.40
2005	Jan	0.50	0.008	21.9	0.3	98.0	0.7	174	2	16.4	0.08	9.4	0.38	36.9	1.00
	Mar	0.50	0.008	21.9	0.9	99.4	0.7	174	1	16.6	0.20	9.8	0.29	37.5	1.20
	Aug	0.49	0.010	20.8	0.3	97.5	0.7	179	3	17.1	0.26	10.2	0.45	40.0	1.50
2006	Jan	0.49	0.019	19.2	0.2	96.7	0.4	179	2	17.4	0.23	9.1	0.15	41.8	1.00
	Mar	0.50	0.021	18.6	0.3	96.0	1.1	183	1	17.2	0.26	9.5	0.21	43.5	1.40
	Aug	0.48	0.006	16.2	0.4	97.0	0.6	186	2	17.6	0.35	9.5	0.17	44.8	0.85
2007	Jan	0.48	0.021	16.2	0.1	96.5	0.4	190	2	18.4	0.18	9.4	0.42	46.8	0.91
	Aug	0.48	0.008	14.4	0.2	96.0	0.8	200	2	20.3	0.46	9.8	0.69	50.5	0.37
2008	Jan	0.46	0.014	14.5	0.3	95.6	0.6	198	3	19.7	0.23	9.4	0.49	51.8	1.60
	Aug	0.48	0.008	11.6	0.1	93.4	0.6	203	4	20.2	0.67	8.7	0.71	54.4	1.30
2009	Jan	0.48	0.005	11.6	0.1	92.9	0.4	204	4	21.1	0.18	8.7	0.34	56.9	0.40
	Aug	0.47	0.004	10.4	0.2	93.0	1.2	205	1	20.7	0.49	8.9	0.87	57.4	0.70
2010	Jan	0.47	0.012	9.6	0.2	91.7	0.6	206	1	21.4	0.32	8.3	0.17	59.7	1.40
	Aug	0.47	0.012	8.5	0.2	90.8	0.5	212	1	22.4	0.38	9.1	0.34	65.0	0.90
	Dec	0.47	0.008	8.2	0.1	90.6	0.8	220	2	22.6	0.37	8.4	0.31	66.2	0.70
2011	Aug	0.46	0.005	6.8	0.2	90.3	0.7	236	2	23.2	0.71	10.8	0.83	71.2	0.60
	Dec	0.46	0.006	6.7	0.1	89.6	0.2	224	2	23.6	0.34	8.5	0.15	72.7	1.00
2012	Aug	0.46	0.004	5.6	0.1	88.8	0.4	226	8	23.7	0.77	10.7	0.46	74.0	1.60
	Dec	0.45	0.005	5.5	0.1	88.9	1.0	229	2	23.6	0.21	8.6	0.26	76.4	0.80
2013	Aug	0.45	0.010	4.8	0.1	88.7	0.9	233	2	24.2	0.20	9.3	0.30	78.8	0.50
	Dec	0.45	0.010	4.6	0.1	88.6	0.5	234	2	24.2	0.30	8.2	0.10	81.9	0.30
2014	Aug	0.45	0.010	4.0	0.1	87.7	0.5	244	3	24.4	0.30	9.0	0.20	87.2	2.20
	Dec	0.45	0.010	3.8	0.1	87.3	0.8	236	1	24.4	0.40	7.7	0.20	89.5	1.30
2015	Aug	0.30	0.010	2.9	0.2	74.6	2.2	251	10	23.2	0.60	11.2	2.10	89.6	2.00
	Dec	0.31	0.010	2.9	0.1	81.9	2.0	247	3	23.0	0.30	8.0	0.30	89.9	0.50

Source: "The Annual Report of Result of Ozone Monitoring in 2015," Ministry of the Environment

2.14 Changes in annual average of total ozone amount over Japan

(Unit: m atm - cm)

	Sapporo	Tsukuba	Kagoshima	Naha
1958	361	327	306	–
1959	374	317	290	–
1960	384	320	310	–
1961	363	316	–	–
1962	372	321	–	–
1963	373	321	290	–
1964	373	312	275	–
1965	371	317	284	–
1966	375	314	281	–
1967	359	307	280	–
1968	359	319	295	–
1969	362	308	288	–
1970	370	318	282	–
1971	366	313	275	–
1972	348	310	284	–
1973	363	313	281	–
1974	354	310	281	266
1975	351	315	285	259
1976	352	298	278	261
1977	365	309	278	263
1978	357	309	272	256
1979	361	314	286	269
1980	368	313	280	264
1981	368	318	280	267
1982	369	318	284	270
1983	361	312	276	264
1984	368	316	281	263
1985	353	298	268	257
1986	360	314	279	264
1987	364	310	286	262
1988	362	308	283	253
1989	352	308	289	265
1990	346	311	287	266
1991	355	313	288	267
1992	342	309	288	263
1993	334	298	276	255
1994	343	311	290	263
1995	345	307	285	258
1996	350	306	284	265
1997	342	301	281	262
1998	352	310	287	267
1999	354	308	283	261
2000	348	309	285	269
2001	357	312	288	268
2002	350	308	280	266
2003	352	314	283	272
2004	349	303	282	270
2005	358	316	–	271
2006	357	316	–	269
2007	357	315	–	274
2008	348	309	–	267
2009	355	311	–	269
2010	362	319	–	272
2011	354	311	–	271
2012	353	309	–	271
2013	357	311	–	271
2014	355	315	–	274
2015	360	315	–	269
2016	351	303	–	262

Source: "Ozone Layer and Ultraviolet Radiation" by Japan Meteorological Agency

2.15 Changes in ozone hole area in the Antarctic

（Unit：10,000 ㎢）

	Area
1979	110
1980	330
1981	310
1982	1,080
1983	1,220
1984	1,460
1985	1,880
1986	1,440
1987	2,240
1988	1,370
1989	2,170
1990	2,100
1991	2,250
1992	2,490
1993	2,570
1994	2,510
1995	2,280
1996	2,670
1997	2,500
1998	2,780
1999	2,560
2000	2,960
2001	2,630
2002	2,170
2003	2,830
2004	2,270
2005	2,670
2006	2,930
2007	2,490
2008	2,650
2009	2,400
2010	2,190
2011	2,550
2012	2,080
2013	2,340
2014	2,340
2015	2,780
2016	2,270

Source: "Ozone Layer and Ultraviolet Radiation” by Japan Meteorological Agency

2.16 Recovery and Destruction of Fluorocarbons

				CFC	HCFC	HFC	Total
Commercial equipment for refrigeration and air conditioning		Number of collected equipment	2005	138,927	638,013	127,749	904,689
			2006	115,157	597,874	165,399	878,430
			2007	104,096	667,412	261,127	1,032,635
			2008	104,130	685,974	447,374	1,237,478
			2009	84,141	593,761	494,489	1,172,391
			2010	72,615	571,284	520,259	1,164,158
			2011	62,944	538,777	628,339	1,230,060
			2012	55,178	514,037	730,014	1,299,229
			2013	64,469	497,208	806,291	1,367,968
			2014	58,864	456,750	878,429	1,394,043
			2015	52,704	503,027	982,296	1,538,027
		Amount recovered (ton)	2005	292	1,823	183	2,298
			2006	348	1,987	206	2,541
			2007	342	2,404	422	3,168
			2008	290	2,814	669	3,773
			2009	207	2,661	733	3,601
			2010	216	2,862	817	3,895
			2011	185	2,850	922	3,958
			2012	211	3,140	1,193	4,543
			2013	175	2,917	1,371	4,463
			2014	150	2,847	1,427	4,424
			2015	165	3,169	1,507	4,841
		Recycled	2005	82	310	42	434
			2006	63	325	34	422
			2007	126	493	111	729
			2008	90	511	135	736
			2009	73	599	151	824
			2010	65	672	166	903
			2011	69	719	209	996
			2012	75	739	271	1,084
			2013	45	790	341	1,176
			2014	50	877	389	1,316
			2015	60	1,178	436	1,674
Car air conditioners	Automobile Recycling Act	Amount recovered (ton)	2005	342	–	441	783
			2006	320	–	608	928
			2007	256	–	724	980
			2008	193	–	821	1,014
			2009	164	–	977	1,141
			2010	70	–	845	915
			2011	34	–	640	673
			2012	26	–	781	807
			2013	19	–	792	811
			2014	14	–	773	787
			2015	10	–	710	720
		Recycled	2005	17	–	15	32
			2006	10	–	12	22
			2007	9	–	14	22
			2008	6	–	11	17
			2009	5	–	12	17
			2010	4	–	12	16
			2011	2	–	13	15
			2012	1	–	10	11
			2013	1	–	11	12
			2014	2		13	15
			2015	1	–	9	10
	Law Concerning the Recovery and Destruction of Fluorocarbons	Car air-conditioners collected (units)	2005	45	–	53	98
			2006	9,310	–	16,105	25,415
			2007	26	–	90	116
			2008	26	–	90	116
			2009	6	–	40	46
			2010	2	–	7	9
			2011	3	–	3	6
			2012	2	–	10	12
			2013	0	–	1	1
			2014	0	–	0	0
			2015	0	–	5	5
		Amount recovered (tons)	2005	12	–	16	28
			2006	2.92	–	5.91	8.83
			2007	0.01	–	0.03	0.04
			2008	0.008	–	0.029	0.038
			2009	0.004	–	0.007	0.011
			2010	0.003	–	0.006	0.008
			2011	0.002	–	0.002	0.004
			2012	0.001	–	0.005	0.006
			2013	–	–	0.001	0.001
			2014	–	–	–	–
			2015	0.000	–	0.012	0.012
Amount of destruction (ton)			2005	556	1,623	608	2,788
			2006	590	1,821	772	3,183
			2007	479	2,095	1,036	3,611
			2008	376	2,439	1,346	4,161
			2009	271	2,164	1,505	3,941
			2010	271	2,284	1,596	4,152
			2011	226	2,362	1,528	4,116
			2012	218	2,393	1,829	4,440
			2013	181	2,349	1,940	4,470
			2014	155	2,305	2,034	4,495
			2015	190	2,464	2,161	4,818

Notes:

1) Because of rounding fractions, the figures in "Total" column may not be consistent with the sums of each figure.

2) Collection of car air conditioners has been transferred to control of the Automobile Recycling Law since January 2005. However, as for the specific second-class products handed over to the second-class Fluorocarbons collectors by December 31, 2004, those products collected under transitional measures are included in "Law concerning the Recovery and Destruction of Fluorocarbons."

Sources: Materials by Ministry of the Environment and Ministry of Economy, Trade and Industry, and Japan Automobile Recycling Promotion Center

2.17 Japan's contribution to the Montreal Protocol Multilateral Fund

（Unit: million dollars）

Period	Total contributions (including carryover)	Japan's contribution
First period 1991 - 1993	240	33
Second period 1994 - 1996	510	65
Third period 1997 - 1999	540	85
Fourth period 2000- 2002	476	99
Fifth period 2003 - 2005	573	104
Sixth period 2006 - 2008	470	88
Seventh period 2009 - 2010	490	81
Eighth period 2012 - 2014	450	64
Ninth period 2015 - 2017	508	66

Source: Material by Ministry of Foreign Affairs

2.18 Trends in emissions of sulfur dioxide (SOx) by country

（Unit： 1,000 t）

	2001	2002	2003	2004	2005	2006	2007	2008	2009	2010	2011	2012	2013	2014
Japan	1,082	1,075	1,050	1,017	969	920	881	811	782	733	692	691	695	689
Australia	2,537	2,702	2,693	2,440	2,520	2,412	2,443	2,622	2,601	2,380	2,355	2,341	2,309	2,287
Austria	33	32	32	27	26	27	24	22	16	18	17	16	16	16
Belgium	166	157	152	154	141	132	123	95	73	59	52	47	44	42
Canada	2,396	2,344	2,292	2,263	2,193	1,999	1,938	1,752	1,481	1,373	1,278	1,242	1,206	1,142
Czech Republic	224	220	216	212	208	203	209	169	166	160	161	155	138	127
Denmark	30	28	35	29	26	30	27	21	16	16	14	13	13	11
Finland	90	89	102	84	69	84	82	68	59	67	61	51	48	44
France	563	522	509	484	467	438	423	356	306	286	250	236	218	170
Germany	626	563	536	497	474	476	460	460	411	432	428	413	410	388
Greece	508	517	556	552	541	534	537	444	423	248	190	151	141	138
Hungary	347	273	246	149	41	39	35	35	30	31	34	31	29	27
Iceland	39	41	37	32	39	44	58	74	69	74	73	84	71	65
Ireland	137	104	81	74	74	63	57	47	34	28	27	25	25	19
Italy	702	622	525	486	408	385	343	288	236	217	195	177	145	131
South Korea	488	474	469	447	408	446	403	418	388	402	434	418	...	...
Luxembourg	4	3	3	2	2	3	2	2	2	2	1	2	2	2
Mexico	...	...	...	...	3,102	...	...	2,241	...	...	...	...	...	...
Netherlands	73	66	62	64	63	63	59	50	37	33	33	34	29	29
New Zealand	75	77	91	87	94	90	82	88	74	74	74	78	75	74
Norway	25	23	23	25	24	21	20	20	16	20	19	17	17	17
Poland	1,436	1,331	1,287	1,249	1,217	1,292	1,229	1,007	868	937	885	859	847	800
Portugal	249	249	190	192	194	169	162	113	78	70	64	58	53	47
Slovakia	131	103	105	96	89	88	71	69	64	69	68	58	53	45
Spain	1,446	1,572	1,307	1,334	1,279	1,162	1,126	504	453	422	458	405	259	255
Sweden	41	41	42	37	36	36	33	31	30	32	29	28	27	24
Switzerland	18	15	15	15	15	14	12	12	10	10	9	9	9	8
Turkey	2,075	1,965	1,888	1,881	2,106	2,270	2,648	2,562	2,666	2,560	2,640	2,716	1,931	2,148
UK	1,135	1,014	991	834	711	670	589	491	400	423	392	439	386	307
USA	14,413	13,564	13,361	13,146	13,145	11,854	10,563	9,302	8,182	6,951	5,791	4,624	4,538	4,441

Source: OECD Stat, Environment, Air and Climate

2.19 Trends in emissions of nitrogen oxide (NOx) by country

（Unit： 1,000 t）

	2001	2002	2003	2004	2005	2006	2007	2008	2009	2010	2011	2012	2013	2014
Japan	1,987	2,038	2,020	1,952	1,928	1,844	1,736	1,600	1,518	1,460	1,395	1,350	1,310	1,276
Canada	1,957	2,029	2,111	2,160	2,187	2,187	2,212	2,259	2,263	2,389	2,297	2,453	2,531	2,549
Mexico	219	224	234	231	233	219	210	193	177	177	167	161	160	149
USA	2,688	2,644	2,637	2,506	2,450	2,351	2,341	2,259	2,086	2,162	2,106	1,989	1,938	1,923
South Korea	330	319	317	328	313	294	281	265	238	245	227	209	201	192
Australia	339	328	328	326	319	312	309	292	271	261	247	234	222	211
New Zealand	222	218	227	211	202	202	189	171	151	146	138	127	122	112
Austria	231	229	238	226	198	214	203	186	167	177	162	153	149	140
Belgium	1,576	1,544	1,506	1,473	1,427	1,353	1,287	1,186	1,105	1,085	1,022	984	963	883
Czech Republic	1,849	1,771	1,715	1,649	1,573	1,557	1,486	1,412	1,312	1,337	1,316	1,274	1,271	1,223
Denmark	386	387	397	403	419	417	418	396	383	324	302	242	249	248
Finland	209	216	207	204	169	172	167	164	157	154	140	124	121	120
France	26	28	27	28	26	26	27	25	25	23	21	21	21	20
Germany	140	133	131	134	136	132	129	116	93	85	76	78	77	76
Greece	1,432	1,377	1,357	1,310	1,254	1,191	1,144	1,073	999	984	956	872	820	795
Hungary	1,219	1,242	1,362	1,378	1,307	1,275	1,188	1,045	1,014	1,061	1,040	1,075	...	...
Iceland	26	28	27	28	26	26	27	25	25	23	21	21	21	20
Ireland	...	...	...	...	2,784	...	...	3,207	...	...	...	...	...	...
Italy	386	375	371	358	348	339	323	314	286	281	267	251	240	215
Luxembourg	44	44	48	56	59	54	49	45	39	39	39	35	32	28
Netherlands	203	197	197	198	198	195	198	187	177	179	172	165	153	142
Norway	839	806	828	855	851	856	861	829	809	861	843	819	798	723
Poland	272	279	255	261	266	245	239	213	202	187	178	167	167	164
Portugal	108	100	98	99	102	96	96	94	84	89	85	81	80	85
Slovakia	1,370	1,411	1,410	1,448	1,435	1,380	1,373	1,185	1,048	971	964	931	824	807
Spain	206	198	194	189	184	180	173	166	154	158	149	142	139	136
Sweden	104	97	95	94	93	90	87	85	79	77	72	72	72	67
Switzerland	819	797	823	839	887	930	1,042	994	971	943	1,118	1,090	1,044	1,051
Turkey	1,804	1,700	1,672	1,623	1,614	1,562	1,493	1,345	1,164	1,142	1,059	1,081	1,032	945
UK	19,393	21,632	20,445	19,248	18,380	17,357	16,334	15,252	14,220	13,381	13,004	12,222	11,691	11,092

Source: OECD Stat, Environment, Air and Climate

2.20 Acid deposition in Europe (Annual average of pH in precipitation)

(Unit: pH)

Country	Station name	1985	1990	1995	2000	2005	2006	2007	2008	2009	2010	2011	2012	2013	2014
Iceland	Irafoss	5.41	5.38	5.55	5.58	5.59	5.41	5.44	5.50	5.50	5.36	5.33	5.48	—	—
Ireland	Valentia	5.38	5.20	5.04	—	5.37	5.13	5.27	5.25	5.30	5.30	5.36	5.28	5.32	5.30
Italy	Montelibretti	5.09	—	4.83	4.60	5.84	5.20	5.62	5.21	5.56	5.92	—	6.02	5.87	6.17
UK	Yarner Wood	—	4.88	4.84	—	4.81	4.84	4.96	4.90	4.99	5.11	5.12	5.04	5.07	5.18
Austria	Illmitz	4.38	4.50	5.06	5.30	4.96	4.92	5.09	5.85	5.47	—	—	—	—	—
Netherlands	Kollumerwaard	—	—	5.14	5.25	5.29	—	5.39	5.53	5.48	5.54	—	—	—	—
Switzerland	Payerne	4.77	4.93	5.10	5.37	5.37	5.48	5.43	5.42	5.40	5.37	5.67	5.59	5.64	5.68
Sweden	Vavihill	4.29	4.41	4.46	4.56	4.80	4.87	4.96	4.83	4.98	4.91	5.16	4.88	4.91	5.09
	Bredkalen	4.47	4.60	4.81	4.81	5.03	5.06	5.09	5.04	5.04	—	—	—	5.06	5.10
Spain	Niembro	—	—	—	4.89	4.23	4.69	5.10	4.91	5.07	3.09	4.88	4.57	4.61	4.70
Slovakia	Chopok	4.27	4.27	4.67	4.55	4.85	4.75	4.93	4.93	4.83	5.00	5.04	4.74	4.99	5.10
Czech Republic	Svratouch	4.46	4.34	4.54	4.75	4.73	4.80	4.92	4.93	4.73	4.94	5.10	4.89	4.92	5.16
	Kosetice	—	4.36	4.47	4.68	4.84	4.79	4.91	4.92	4.88	4.91	5.33	5.22	5.01	5.24
Denmark	Keldsnor	4.32	4.66	4.62	4.85	4.94	5.33	5.08	5.11	4.96	—	—	—	—	—
Germany	Deuselbach	4.37	4.64	4.76	4.82	4.83	4.98	4.87	5.24	5.12	5.11	5.10	5.45	5.17	—
	Zingst	—	—	4.59	—	4.75	4.93	4.93	4.92	5.02	—	5.25	5.33	5.25	5.33
Norway	Birkenes	4.24	4.37	4.48	4.56	4.68	4.70	4.75	4.77	4.72	4.69	4.86	4.86	4.97	4.77
	Skreadalen	4.48	4.61	4.75	4.90	5.20	—	—	—	—	—	—	—	—	—
Hungary	K-Puszta	5.08	4.99	4.83	5.79	5.67	5.58	5.53	5.75	5.50	5.63	5.82	5.77	5.66	5.66
Finland	Ahtari	4.55	4.57	4.61	4.73	4.78	4.72	4.79	4.79	4.79	4.87	4.88	4.86	4.86	4.79
France	La Hague	4.41	4.68	5.05	5.04	—	—	—	—	—	—	—	—	—	—
Poland	Jarczew	4.16	4.33	4.43	4.61	4.63	4.71	4.71	4.85	5.05	4.98	4.90	4.93	4.82	4.87
Portugal	Braganca	5.12	5.41	5.92	5.52	5.76	5.78	5.79	5.35	5.50	—	—	—	—	—

Note:
Skreadalen, La Hague and Braganca stations suspended their operations in February 2005, December 2003, and December 2009 respectively.

Source："CCC-Report(2/2160)," EMEP (http://www.emep.int/publ/common_publications.html)

2.21 Acid Deposition in Japan (Annual Average of pH in Precipitation)

(Unit: pH)

Monitoring site	2008	2009	2010	2011	2012	2013	2014	2015
Rishiri	4.94	4.67	4.75	4.67	4.70	4.69	4.76	4.77
Sapporo	4.62	4.87	4.86	4.76	4.69	4.65	4.73	4.77
Tappimisaki	4.89	4.72	4.68	4.61	4.72	4.71	4.72	4.84
Obanazawa	4.73	—	—	—	—	—	—	—
Sado seki misaki	4.59	4.72	4.70	4.66	4.75	4.70	4.72	4.73
Niigata maki	4.57	4.63	4.68	4.60	4.62	4.65	4.67	4.65
Echizenmisaki	4.62	4.58	4.59	4.63	4.57	4.60	4.64	4.68
Happo one	4.88	5.03	5.07	5.04	4.93	5.00	5.02	5.06
Oki	4.63	4.67	4.66	4.68	4.66	4.61	4.67	4.75
Banryuko	4.52	4.70	4.69	4.58	4.51	4.63	4.59	4.65
Ochiishimisaki	4.89	5.01	4.81	4.87	4.83	5.00	5.19	5.02
Hachimantai	4.77	4.92	4.94	4.86	4.73	4.83	—	—
Nonodake	4.76	4.81	4.95	5.02	4.93	4.98	5.05	4.90
Tsukuba	4.85	—	—	—	—	—	—	—
Akagi	4.82	4.76	4.82	4.84	4.74	4.85	4.85	4.75
Ogasawara	5.06	5.18	5.22	5.34	5.37	5.22	5.07	5.20
Kawasaki	—	—	—	—	—	—	—	—
Tokyo	4.62	4.76	4.95	4.79	4.88	5.03	4.83	4.81
Ijirako	4.78	4.65	4.78	4.72	4.70	4.74	4.70	4.74
Inuyama	4.58	—	—	—	—	—	—	—
Nagoya	—	—	—	—	—	—	—	—
Ushiomisaki	4.76	4.80	4.86	4.81	4.76	4.81	—	—
Yusuhara	4.68	4.78	4.83	4.87	4.83	4.77	4.93	4.85
Ebino	4.83	4.61	4.72	4.71	4.67	4.73	4.70	4.97
Kyotoyawata	4.64	4.68	4.73	4.73	4.66	4.77	—	—
Osaka	—	—	—	—	—	—	—	—
Amagasaki	4.63	4.74	4.84	4.84	4.71	4.79	4.65	4.81
Kurahashijima	4.54	—	—	—	—	—	—	—
Oitakujyu	4.69	4.66	4.66	4.66	4.69	4.66	4.40	4.74
Chikugoogoori	4.76	4.74	4.80	4.67	4.65	4.66	4.69	4.84
Omuta	—	—	—	—	—	—	—	—
Tsushima	4.49	4.53	4.77	4.65	4.66	4.75	4.72	4.81
Goto	4.67	—	—	—	—	—	—	—
Yakushima	4.65	4.50	4.66	4.56	4.68	4.59	4.59	4.71
Hedomisaki	5.07	5.03	5.21	4.91	5.12	4.93	5.14	5.11
Maximum	5.07	5.18	5.22	5.34	5.37	5.22	5.19	5.20
Minimum	4.48	4.50	4.59	4.56	4.51	4.59	4.40	4.65
Average	4.71	4.76	4.82	4.77	4.76	4.78	4.78	4.83
Standard deviation	0.15	0.17	0.16	0.17	0.18	0.16	0.20	0.15

Notes:

・- : Not measured.

・Data of the shaded area: Rejected annual average by the year criterion.

Source: Transboundary air pollutions and acid deposition monitoring Report (2015) , Ministry of the Environment

2.22 Annual average pH at monitoring sites of East Asia acid deposition monitoring network (EANET)

(Unit: pH)

			2003	2004	2005	2006	2007	2008	2009	2010	2011	2012	2013	2014	2015
Cambodia	Phnom Penh		—	5.32	6.32	6.72	6.69	5.84	6.19	5.97	5.96	6.16	6.18	6.21	6.17
China	Xian	Han Cisne	6.00	6.30	5.41	5.56	5.52	6.40	6.53	6.68	6.27	6.26	6.93	6.61	6.57
		Vishuiyan	6.11	5.98	5.15	5.84	—	—	—	—	—	—	—	—	—
		Jiwozi	6.05	6.11	6.20	5.87	6.85	6.94	6.10	5.54	5.95	7.12	6.20	6.98	6.57
	Chongqing	Guaninchao	4.49	4.59	4.95	4.86	4.65	—	—	—	—	—	—	—	—
		Jinyunshan	4.30	4.59	4.62	4.69	4.52	4.36	4.33	3.94	4.04	4.09	4.20	4.39	4.31
	Xiamen	Hongwen	4.46	4.71	4.70	4.83	4.79	4.59	4.52	4.57	4.65	4.51	4.88	5.08	4.81
		Xiaoping	4.38	4.61	4.78	4.78	4.60	4.55	4.47	4.58	4.82	4.80	5.00	4.71	4.87
	Zhuhai	Xiang Zhou	5.10	4.78	4.56	4.87	4.63	4.93	4.87	4.85	5.05	5.11	5.23	5.00	5.18
		Zhuxiandong	5.10	4.63	4.61	4.82	—	4.88	4.75	4.95	4.78	—	—	—	5.48
Indonesia	Kototabang		5.30	4.67	4.68	4.53	5.27	5.22	4.65	4.80	5.04	5.01	4.97	4.82	4.92
	Jakarta		5.16	4.69	4.31	4.38	4.56	4.65	4.63	4.73	4.55	4.76	4.77	4.71	4.77
	Serpong		4.62	4.68	4.59	4.60	4.59	4.62	4.71	4.76	4.70	4.91	5.06	5.14	5.04
	Bandung		5.00	5.03	5.03	5.15	4.93	5.17	5.30	5.10	5.40	5.46	5.40	5.21	5.35
	Maros		—	—	—	—	—	5.63	5.33	5.21	5.35	5.62	5.47	5.23	5.37
Japan	Rishiri		4.88	4.84	4.74	4.67	4.58	4.91	4.74	4.73	4.70	4.70	4.67	4.73	4.72
	Tappimisaki		4.57	4.59	4.60	4.58	4.62	4.59	4.74	4.69	4.61	4.69	4.80	4.66	4.74
	Ogasawara		5.04	5.13	4.81	4.99	5.03	5.00	5.17	5.25	5.30	5.33	5.25	5.08	5.21
	Sadozekimisaki		4.67	4.70	4.56	4.70	4.50	4.55	4.75	4.70	4.68	4.73	4.74	4.70	4.71
	Happo one		4.91	4.86	4.80	4.97	4.79	4.83	4.97	5.10	5.04	4.88	5.00	5.01	4.96
	Ijirako		4.41	4.65	4.51	4.51	4.53	4.45	4.64	4.76	4.75	4.69	4.75	4.71	4.71
	Oki		4.76	4.80	4.56	4.73	4.64	4.60	4.71	4.66	4.73	4.58	4.61	4.65	4.63
	Banryuko		4.63	4.70	4.49	4.69	4.49	4.53	4.66	4.70	4.66	4.48	4.64	4.55	4.59
	Yusuhara		4.73	4.97	4.64	4.84	4.81	4.67	4.77	4.79	4.93	4.77	4.78	4.88	4.81
	Hedomisaki		4.90	4.78	4.83	4.99	4.99	5.00	5.11	5.20	4.90	5.13	4.96	5.02	5.04
	Ochiishimisaki		4.91	4.68	4.84	4.86	4.78	4.87	5.02	4.83	4.88	4.82	5.03	—	5.03
	Tokyo		—	—	—	—	4.79	4.60	4.75	4.95	4.83	4.84	5.05	4.83	4.87
Laos	Vientiane		6.51	5.65	6.32	6.49	5.67	6.01	5.48	—	—	6.46	—	6.54	6.19
Malaysia	Tanarata		4.90	4.86	4.84	4.95	4.95	5.10	5.08	5.06	5.01	4.96	4.95	4.86	4.86
	Petaling Jaya		4.28	4.33	4.37	4.42	4.56	4.43	4.35	4.26	4.16	4.21	4.42	4.42	4.35
	Danang Valley		—	—	4.98	5.05	5.10	5.22	5.22	5.22	5.21	5.18	5.27	5.31	5.24
	Kuching		—	—	—	—	—	5.26	5.26	5.28	5.43	5.32	5.29	5.34	5.31
Mongolia	Ulan Bator		5.72	6.46	5.99	6.45	6.26	6.28	6.11	5.88	5.44	5.88	5.98	—	6.03
	Tereruji		5.40	5.78	5.26	5.16	5.22	5.43	6.22	5.61	5.26	5.74	4.91	—	5.27
Myanmar	Yangon		—	—	—	—	5.57	6.41	6.46	6.42	6.46	6.49	6.45	6.70	6.57
Philippines	Metro Manila		4.44	5.18	4.95	5.30	5.27	5.55	5.23	5.65	5.64	5.22	5.55	6.13	5.81
	Los Banos		4.49	5.26	5.14	5.61	5.54	4.95	5.58	5.88	5.57	5.66	5.85	—	6.29
	Mt. Sto. Tomas		—	—	—	6.32	5.53	5.49	5.83	6.70	5.35	5.95	5.29	6.14	5.71
Korea	Kanghwa		4.67	4.57	4.25	4.68	4.62	4.55	4.59	4.41	—	4.61	4.58	4.87	4.65
	Imsil		5.08	4.93	6.00	5.19	5.73	4.88	5.09	4.87	—	5.11	5.22	5.29	5.17
	Cheju		4.83	4.74	4.55	4.34	4.51	4.67	5.11	5.04	—	5.31	5.38	5.79	5.52
Russia	Mondy		5.35	5.34	5.36	5.39	5.52	5.17	5.48	5.55	5.54	5.62	5.32	5.33	5.38
	Irkutsk		5.37	4.91	5.12	5.15	4.93	4.77	5.41	5.13	5.02	4.93	5.01	5.06	5.03
	Listvyanka		5.01	4.92	4.83	4.64	4.67	4.63	4.84	4.76	4.73	4.78	4.80	4.90	4.82
	Primorskaya		4.88	4.84	5.06	4.83	4.84	4.79	4.98	4.97	4.63	5.07	5.06	5.47	5.15
Thailand	Chiang Mai (Mae Hia)		5.61	5.59	5.23	5.70	5.95	5.98	5.92	6.17	5.29	6.10	6.04	6.28	6.16
	Kanchanaburi		5.46	6.07	5.54	5.75	5.78	5.66	5.66	5.69	5.49	6.02	5.33	5.79	5.61
	Bangkok		4.53	5.19	4.89	5.16	5.05	5.28	5.09	5.07	5.05	5.68	5.60	7.03	5.57
	Samut Prakan		—	5.47	5.47	5.87	5.61	5.29	5.13	5.32	5.90	6.17	5.98	6.51	5.89
	Pathum Thani		4.86	4.87	4.89	4.89	4.81	5.03	5.15	5.24	5.00	5.44	5.41	5.51	5.41
	Nakhon Ratchasima		—	—	—	5.12	5.08	5.03	4.87	4.75	5.00	5.07	5.24	4.82	5.09
Vietnam	Hanoi		5.81	5.65	6.15	5.73	5.58	5.84	5.67	5.93	5.30	5.62	5.66	5.74	5.73
	Hua Hin		5.38	5.60	5.69	5.59	5.06	5.49	5.29	5.37	5.44	5.63	6.04	5.44	5.55
	Cuc Phuong		—	—	—	—	—	—	4.99	5.23	5.04	5.43	5.42	5.52	5.42
	Da Nang		—	—	—	—	—	—	4.77	5.11	4.98	5.44	5.58	5.52	5.59

Note:
・Data of the shaded area: Rejected annual average was by the year criterion.

Source: Data Report on the Acid Deposition in the East Asian Region(2000～2005)
Data Report on the Acid Deposition in the East Asian Region(2006～2015)

2.23 Water quality in rivers

(Unit: mg-O2/L)

Country (region)	River	Biochemical oxygen demand (BOD)							
		1985	1990	1995	2000	2005	2010	2012	2013
Asia									
Japan	Ishikarigawa	1.5	1.2	1.3	1.0	0.9	...	...	...
	Chikugogawa	2.2	1.7	1.5	1.5	1.4	...	...	...
	Tonegawa	2.6	2.3	1.9	1.7	1.6	...	...	...
	Yodogawa	3.4	2.5	2.3	1.5	1.3	...	...	...
South Korea	Geumgang	...	...	4.5	3.5	...	...	...	...
	Nakutongan	...	3.0	5.1	2.7	2.6	2.4	2.4	2.3
	Hangang	...	3.4	3.8	2.7	3.1	3.2	2.6	2.1
	Yonsangan	...	6.7	7.0	6.5	5.3	4.3	4.6	3.7
Turkey	Gediz River	2.3	10.6	...	3.7	...	...	...	...
	Sakarya River	3.6	2.7	4.1	3.1	...	...	...	...
	Porsuk River	2.0	1.1	1.6	1.1	...	...	...	...
North America									
USA	Delaware River	2.1	1.2	2.6	3.7	3.2	...	...	...
	Mississippi River	1.2	1.9	1.1	1.5	1.9	...	...	...
Mexico	Grijalva River	1.5	2.2	2.0	1.8	2.2	4.3	16.6	8.7
	Bravo River	2.5	3.6	3.1	2.2	...	8.3	8.9	5.3
	Lerma River	...	13.5	...	30.0	4.2	10.6	5.9	11.3
Europe									
Ireland	River Clare	...	...	...	1.5	0.6	0.6	0.8	...
	River Barrow	...	...	...	1.5	1.4	1.2	1.8	...
	River Blackwater	...	...	...	2.0	2.1	1.4	1.6	...
	River Boyne				2.1	1.5	1.7	2.3	...
UK	Clyde River	3.2	3.5	2.9	2.3	...	...	...	...
	Severn River	1.7	2.8	2.4	...	...	...	...	...
	Thames River	2.4	2.9	1.8	1.7	...	...	...	...
Austria	Inn River	...	...	2.8	0.8	0.6	0.8	1.2	...
	Danube River	...	...	2.1	0.4	0.4	0.6	0.6	...
Netherlands	Meuse River (Maas)	2.9	1.6	2.0	2.2	...	...	...	...
	Rhein River	2.3	1.6	1.9	...	...	...	...	...
Spain	Ebro River	...	4.0	9.2	8.1	2.3	...	...	...
	Guadalquivir River	...	9.8	77.1	5.9	3.9	...	...	...
	Douro River	...	3.0	5.4	3.1	2.5	...	...	...
Czech Republic	Oder River	10.1	5.9	7.1	5.8	4.3	3.5	...	...
	Morava River	...	...	4.6	3.0	3.0	...	...	...
	Rabe River	6.6	6.8	3.7	3.9	2.9	2.8	...	...
Denmark	Gudena River	2.5	2.0	2.4	1.9	1.5	1.2	...	...
	Sukyan River	5.5	2.3	...	1.2	0.8	1.0	...	...
Germany	Danube River	...	...	...	...	1.7	1.6	1.6	...
Hungary	Tisza River	...	3.3	3.8	2.5	3.0	...	...	...
	Danube River	...	3.8	3.1	2.7	3.1	...	...	...
	Doraba River	...	3.4	3.3	2.9	2.1	...	...	...
France	Seine River	4.3	5.6	4.4	3.2	...	1.1	...	...
	Rhone River	5.0	1.4	1.3	2.0	...	1.0	...	...
	Loire River	6.0	7.0	4.0	4.3	...	1.7	...	...
Belgium	Schelde River			5.2	7.0	6.2		2.8	
	Meuse River (Maas River)	...	...	1.6	2.2	1.0	1.0	1.0	1.0
Poland	Oder River	...	...	...	5.2	5.5	3.1	3.5	...
	Vistula River	...	...	...	4.7	4.3	2.9	4.1	...
Luxemburg	Syre River	...	...	2.7	3.2	1.2	1.9	1.5	...
	Moselle River	...	...	...	...	...	2.5	...	...

Notes:

・Rivers: Measurement was conducted at the estuary of major rivers with large basin areas, or downstream points of within the borders.

・Biochemical oxygen demand (BOD): An index showing to which extent river water is polluted, indicating the oxygen amounts needed for decomposing organic matter by microorganisms (bacteria) in water. The higher annual average value is, the further pollution is indicated. Each country or region uses a different measuring method.

Source: OECD. Stat , Environment , Air and Climate

2.24 Water quality in lakes

Country (region)	Lakes and marshes	Total phosphorus （mgP/l）				Total nitrogen （mgN/l）			
		1990	2000	2012	2013	1990	2000	2012	2013
Asia									
Japan	Kasumigaura	0.050	0.110	…	…	0.93	0.97	…	…
	Biwako (North)	0.007	0.006	…	…	0.29	0.29	…	…
	Biwako (South)	0.020	0.020	…	…	0.38	0.39	…	…
South Korea	Lake Chungju	0.044	0.025	0.023	0.021	0.62	2.27	3.04	2.48
	Chuncheon Lake	0.014	0.015	0.020	0.017	0.60	1.43	2.02	1.51
	Paltang Lake	0.048	0.029	0.039	0.037	1.36	1.96	2.27	2.20
Turkey	Lake Altun-apa	0.110	…	…	…	…	…	…	…
	Lake Gala	0.680	…	…	…	…	…	…	…
	Lake Sapanca	0.030	…	…	…	…	…	…	…
North America									
Canada	Lake Ontario	0.010	…	0.007	0.006	1.59	…	1.77	1.75
	Lake Superior	0.003	…	…	0.002	1.48	…	…	1.71
	Lake Huron	0.005	0.004	0.004	…	1.52	1.53	1.45	…
Mexico	Laguna Catemaco	…	0.070	0.048	0.046	0.08	0.22	2.00	0.59
	Lake Chapala	0.240	0.570	0.400	0.510	0.15	0.20	0.95	1.34
Europe									
UK	Lake Neagh	…	…	…	…	…	…	…	…
	Lake Lomond	0.019	…	…	…	0.13	…	…	…
Italy	Lake Garda	…	…	…	…	…	…	…	…
	Lake Como	…	…	…	…	…	…	…	…
	Lake Maggiore	…	…	…	…	…	…	…	…
Austria	Lake Ossiach	…	0.011	0.011	…	…	…	…	…
	Lake Mondsee	…	0.008	0.006	…	…	…	…	…
Switzerland	Lake Geneva	0.055	0.036	…	…	0.69	0.68	…	…
Sweden	Lake Vanern	0.009	0.006	0.006	…	0.79	0.82	0.61	…
	Lake Vattern	0.007	0.003	0.003	…	0.69	0.73	0.67	…
	Lake Malaren	0.025	0.024	0.022	…	0.58	0.66	0.52	…
Denmark	Lake Arreso	0.514	0.194	0.094	…	3.50	2.61	1.39	…
	Lake Fureso	0.169	0.097	0.074	…	0.97	0.82	0.68	…
Germany	Lake Bodensee	0.021	0.011	…	…	…	…	…	…
Norway	Lake Mjosa	…	…	…	…	…	…	…	…
	Fjordland	…	…	…	…	…	…	…	…
Hungary	Lake Balaton	0.036	0.086	…	…	0.78	0.79	…	…
Finland	Lake Parr	0.027	0.024	…	…	0.93	0.89	…	…
	Lake Päijänne	0.014	0.013	…	…	0.62	0.78	…	…
	Lake Yli-Kitka	0.017	0.014	…	…	0.45	0.54	…	…
France	Lake Annecy	0.010	…	…	…	0.07	…	…	…
	Lac de Biscarrosse et de Parentis	…	…	…	…	…	…	…	…
Luxemburg	Lake Echternach	…	…	…	…	…	…	…	…
Oceania					…				
New Zealand	Lake Taupo	…	0.007	…	…	…	0.07	…	…

Notes:

・The annual averages of concentrations of phosphorus and nitrogen in each lake. Use the figures with caution because measuring methods may differ from countries or regions, and surveyed years.

Total Phosphorus: The total amount of phosphorus in inorganic and organic phosphorus compounds existing in water.

Total Nitrogen: The total of inorganic nitrogen, which is classified into ammonium nitrogen, nitrite nitrogen and nitrate nitrogen and organic nitrogen existing in water.

Source: OECD Stat, Environment , Water

2.25 Population accessible to sewage treatment facilities

(Unit : %)

Country (region)	Primary treatment						Secondary treatment						Tertiary treatment						Total					
	2000	2005	2010	2012	2013	2014	2000	2005	2010	2012	2013	2014	2000	2005	2010	2012	2013	2014	2000	2005	2010	2012	2013	2014
Canada	-	-	-	-	-	-	-	-	-	-	-	-	-	-	-	-	-	-	-	-	-	-	-	-
Mexico	-	-	-	-	-	-	-	-	-	-	-	-	-	-	-	-	-	-	59.2	67.6	70.6	-	-	-
USA	2.3	-	-	1.3	-	-	32.0	-	-	28.5	-	-	36.6	-	-	40.6	-	-	75.4	-	-	75.4	-	-
Japan	0.0	0.0	0.0	0.0	0.0	0.0	54.0	55.3	54.9	53.9	52.8	51.8	8.0	14.0	20.2	22.4	24.2	25.8	62.0	69.3	75.1	76.3	77.0	77.6
South Korea	1.1	0.7	0.0	0.0	0.0	0.0	68.0	64.7	35.5	31.1	10.0	9.1	0.8	17.6	54.1	59.9	82.1	82.8	70.5	83.5	90.1	91.6	92.1	92.5
Australia	0.0	0.0	0.0	0.0	0.0	0.0	-	-	-	-	-	-	-	-	-	-	-	-	-	-	-	-	-	-
New Zealand	14.0	-	-	-	-	-	26.0	-	-	-	-	-	40.0	-	-	-	-	-	-	-	-	-	-	-
Austria	-	-	0.0	0.0	-	0.0	-	-	1.3	1.0	-	1.2	-	-	92.6	93.5	-	93.8	85.4	-	93.9	94.5	-	95.0
Belgium	0.0	0.0	0.0	0.0	0.0	-	5.5	7.7	8.6	9.8	10.8	-	35.6	46.7	66.4	71.5	73.4	-	79.1	84.0	82.2	88.6	91.4	-
Czech Republic	-	0.2	0.1	0.1	0.2	0.2	-	16.9	8.7	8.6	8.2	7.2	-	55.9	68.2	69.4	71.6	73.4	72.4	76.7	82.3	83.0	84.7	85.3
Denmark	0.7	-	2.4	2.3	0.8	0.0	4.4	-	2.4	1.8	1.9	2.0	82.7	-	85.6	86.6	88.2	89.1	87.8	-	90.3	90.7	90.9	91.0
Finland	0.0	-	0.0	0.0	0.0	-	0.0	-	0.0	0.0	0.0	-	80.0	-	83.0	83.0	83.0	-	80.0	-	83.0	83.0	83.0	-
France	-	-	0.0	0.4	0.1	0.1	-	-	13.2	16.1	16.0	14.3	-	-	64.5	64.0	64.4	66.0	-	-	82.0	82.0	82.1	82.1
Germany	-	-	0.0	0.0	0.0	0.0	-	-	3.0	2.7	2.5	-	-	-	92.6	92.8	92.8	-	-	-	96.4	96.0	96.8	-
Greece	-	-	0.0	0.0	-	-	-	-	7.8	6.3	3.6	3.6	-	-	79.6	85.8	89.3	89.3	-	-	87.3	92.0	92.8	92.8
Hungary	16.2	18.9	2.3	0.1	0.1	0.0	24.3	20.4	36.4	17.9	16.1	17.8	5.5	21.3	33.1	54.9	56.5	55.9	51.0	64.8	72.4	74.0	75.0	76.9
Iceland	33.0	55.0	65.0	-	-	-	0.0	2.0	0.0	-	-	-	0.0	0.0	1.0	-	-	-	90.0	89.0	91.0	-	-	-
Ireland	-	-	-	-	1.2	0.8	-	-	-	-	46.5	47.0	-	-	-	-	17.8	17.6	-	-	-	-	68.6	68.6
Italy	-	2.3	-	3.3	-	-	-	18.3	-	22.4	-	-	-	35.9	-	35.2	-	-	-	-	-	-	-	-
Luxembourg	-	-	4.4	2.0	1.9	1.8	-	-	62.0	27.3	26.5	26.7	-	-	29.3	68.8	69.8	70.0	-	-	97.1	100.0	100.0	100.0
Netherlands	0.0	0.0	0.0	0.0	0.0	0.0	16.5	5.0	1.3	0.7	1.0	1.0	81.6	94.0	98.1	98.7	98.4	98.4	98.2	99.0	99.3	99.4	99.4	99.4
Norway	22.1	20.6	21.9	19.1	19.3	19.4	0.9	1.4	1.6	1.4	1.4	1.6	51.1	56.6	57.6	61.2	61.2	61.2	79.9	83.6	85.1	85.2	85.3	85.2
Poland	3.4	2.1	0.1	0.2	0.1	0.0	30.1	20.8	14.9	13.9	14.2	13.8	20.1	37.3	49.6	54.6	56.0	57.6	53.6	60.2	64.6	68.7	70.3	71.5
Portugal	-	10.9	-	-	-	-	-	27.4	-	-	-	-	-	15.2	-	-	-	-	-	74.0	-	-	-	-
Slovakia	10.0	5.0	0.4	0.5	0.5	0.4	10.9	21.2	35.0	34.8	33.1	32.3	1.4	10.9	16.3	19.8	23.0	23.7	62.6	62.6	62.6	62.6	62.6	62.6
Spain	1.0	1.0	3.0	0.6	-	1.7	65.0	-	33.0	28.1	-	23.9	15.0	-	60.0	66.7	-	69.0	93.0	-	98.0	99.1	-	97.2
Sweden	0.0	0.0	0.0	0.0	0.0	0.0	5.0	5.0	4.0	4.0	4.0	4.0	81.0	81.0	82.0	83.0	83.0	83.0	86.0	86.0	86.0	87.0	87.0	87.0
Switzerland	0.0	0.1	0.0	-	0.0	-	22.0	19.7	19.8	-	11.0	-	74.0	77.0	77.5	-	87.0	-	96.0	96.8	97.3	-	98.0	-
Turkey	8.0	13.6	14.4	16.3	-	20.9	14.6	18.5	19.8	20.2	-	24.8	3.7	10.0	17.8	21.8	-	18.4	63.0	68.8	78.7	83.8	-	87.0
UK	3.6	0.1	0.0	-	-	0.1	64.0	56.4	49.6	-	-	43.0	27.0	42.9	49.9	-	-	56.9	96.6	99.3	100.0	-	-	-

Source: OECD Stat, Environment, Water

2.26 Amount of water intake and fresh water resources by country (1)

Country	Water resource		Annual amount of water intake				
	Domestic water flow (km³)	Per person (m³)	Total (km³)	Shares in water resources(%)	Agriculture (%)	Industry (%)	Life (%)
	2014	2014	2014				
World	42,801	5,922	3,986	9.3	70.0	19.0	11.0
Asia							
Japan	430	3,378	82	18.9	67.0	14.0	19.0
Afghanistan	47	1,439	20	43.0	99.0	1.0	1.0
Yemen	2	80	4	169.8	91.0	2.0	7.0
Israel	1	91	2	260.5	58.0	6.0	36.0
Iraq	35	1,006	66	187.5	79.0	15.0	7.0
Iran	129	1,639	93	72.6	92.0	1.0	7.0
India	1,446	1,118	761	52.6	90.0	2.0	7.0
Indonesia	2,019	7,914	113	5.6	82.0	7.0	12.0
South Korea	65	1,278	29	45.0	55.0	15.0	24.0
North Korea	67	2,668	9	12.9	76.0	13.0	10.0
Kuwait	0	0	1	..	54.0	2.0	44.0
Saudi Arabia	2	78	24	986.3	88.0	3.0	9.0
Syria	7	371	17	235.0	88.0	4.0	9.0
Sri Lanka	53	2,542	13	24.5	87.0	6.0	6.0
Thailand	225	3,281	57	25.5	90.0	5.0	5.0
China	2,813	2,062	608	21.6	65.0	23.0	12.0
Turkey	227	2,947	42	18.5	81.0	11.0	15.0
Nepal	198	6,998	10	4.8	98.0	0.0	2.0
Pakistan	55	296	184	333.6	94.0	1.0	5.0
Bangladesh	105	659	36	34.2	88.0	2.0	10.0
Philippines	479	4,785	82	17.0	82.0	10.0	8.0
Vietnam	359	3,961	82	22.8	95.0	4.0	1.0
Malaysia	580	19,187	11	1.9	22.0	43.0	35.0
Myanmar	1,003	19,317	33	3.3	89.0	1.0	10.0
Mongolia	35	11,902	1	1.6	44.0	43.0	13.0
Jordan	1	77	1	138.0	65.0	4.0	31.0
Laos	190	28,952	4	1.8	91.0	5.0	4.0
Lebanon	5	857	1	27.3	60.0	11.0	29.0
Oceania							
Australia	492	20,971	20	4.0	66.0	13.0	22.0
New Zealand	327	72,510	5	1.6	62.0	23.0	16.0
Papua New Guinea	801	103,278	0	0.0	0.0	43.0	57.0
North & Latin America							
USA	2,818	8,846	486	17.0	36.0	51.0	13.0
El Salvador	16	2,488	2	13.6	68.0	10.0	22.0
Canada	2,850	80,181	39	1.4	12.0	80.0	14.0
Guatemala	109	6,858	3	3.0	57.0	18.0	25.0
Costa Rica	113	23,752	2	2.1	57.0	11.0	32.0
Jamaica	11	3,780	1	7.5	55.0	9.0	35.0
Dominican Republic	24	2,258	7	30.5	80.0	8.0	12.0
Nicaragua	156	25,973	2	1.0	77.0	5.0	19.0
Haiti	13	1,231	2	11.1	83.0	4.0	13.0
Panama	137	34,990	1	0.8	43.0	1.0	56.0
Honduras	91	10,291	2	1.8	73.0	7.0	20.0
Mexico	409	3,293	80	19.6	77.0	9.0	14.0
South America							
Argentina	292	6,794	38	12.9	74.0	11.0	15.0
Uruguay	92	26,963	4	4.0	87.0	2.0	11.0
Ecuador	442	27,818	10	2.2	81.0	6.0	13.0
Colombia	2,145	44,882	12	0.5	54.0	19.0	27.0
Chile	885	50,245	35	4.0	83.0	13.0	4.0
Paraguay	117	17,856	2	2.1	79.0	6.0	15.0
Brazil	5,661	27,721	75	1.3	60.0	17.0	23.0
Venezuela	805	26,189	23	2.8	74.0	4.0	23.0
Peru	1,641	52,981	14	0.8	89.0	2.0	9.0
Bolivia	304	28,735	2	0.7	92.0	2.0	7.0
Europe							
Ireland	49	10,612	1	1.5	15.0	7.0	83.0
Albania	27	9,311	1	4.9	39.0	18.0	43.0
Italy	183	3,002	54	29.5	44.0	36.0	18.0
Ukraine	55	1,217	15	27.0	30.0	48.0	22.0
Ukraine	145	2,244	8	5.7	13.0	14.0	71.0
Austria	55	6,439	4	6.3	2.0	77.0	21.0
Netherlands	11	652	11	97.5	1.0	88.0	11.0
Greece	58	5,325	10	16.6	88.0	3.0	9.0
Switzerland	40	4,934	2	4.9	8.0	32.0	60.0
Sweden	171	17,636	3	1.6	4.0	58.0	38.0
Spain	111	2,392	37	33.6	68.0	18.0	14.0
Slovakia	13	2,325	1	4.4	4.0	49.0	46.0
Slovenia	19	9,054	1	6.2	0.0	85.0	14.0
Czech Republic	13	1,249	2	12.5	3.0	61.0	38.0
Denmark	6	1,063	1	10.9	25.0	20.0	55.0
Germany	107	1,321	33	30.9	1.0	83.0	14.0
Norway	382	74,359	3	0.8	28.0	41.0	31.0
Hungary	6	608	5	84.2	6.0	79.0	14.0
Finland	107	19,592	7	6.1	1.0	82.0	6.0
France	200	3,015	31	35.1	10.0	71.0	18.0
Bulgaria	21	2,907	6	26.0	14.0	72.0	16.0
Belgium	12	1,071	6	50.0	1.0	88.0	12.0
Poland	54	1,410	12	21.4	10.0	74.0	18.0
Portugal	38	3,653	9	24.1	79.0	13.0	11.0

2.26 Amount of water intake and fresh water resources by country (2)

Country	Water resource		Annual amount of water intake				
	Domestic water flow (km³)	Per person (m³)	Total (km³)	Shares in water resources(%)	Agriculture (%)	Industry (%)	Life (%)
	2014	2014	2014				
Romania	42	2,129	6	15.1	18.0	67.0	15.0
Russia	4,312	29,982	61	1.4	20.0	60.0	20.0
Africa							
Algeria	11	288	8	74.9	59.0	5.0	36.0
Angola	148	5,498	1	0.5	21.0	34.0	45.0
Uganda	39	1,004	1	1.6	41.0	8.0	51.0
Egypt	2	20	78	4,333.3	86.0	3.0	12.0
Ethiopia	122	1,253	11	8.6	92.0	1.0	10.0
Eritrea	3	674	1	20.8	95.0	0.0	5.0
Ghana	30	1,124	1	3.2	66.0	10.0	24.0
Cameroon	273	12,275	1	0.4	76.0	7.0	17.0
Guinea	226	19,144	1	0.2	53.0	9.0	38.0
Kenya	21	450	3	15.5	59.0	4.0	37.0
Ivory Coast	77	3,410	2	2.0	38.0	21.0	41.0
Democratic Republic of Congo	900	12,208	1	0.1	11.0	21.0	68.0
Zambia	80	5,134	2	2.0	73.0	8.0	18.0
Sierra Leone	160	22,602	0	0.1	22.0	26.0	52.0
Zimbabwe	12	796	4	29.1	82.0	6.0	12.0
Sudan	4	102	27	673.3	96.0	0.0	4.0
Senegal	26	1,774	2	8.6	93.0	3.0	4.0
Somalia	6	444	3	55.0	99.0	0.0	0.0
Tanzania	84	1,608	5	6.2	89.0	0.0	10.0
Chad	15	1,105	1	5.9	76.0	12.0	12.0
Central Africa	141	31,227	0	0.1	1.0	17.0	83.0
Tunisia	4	376	3	78.8	80.0	5.0	15.0
Togo	12	1,591	0	1.5	45.0	2.0	53.0
Nigeria	221	1,252	13	5.9	54.0	15.0	31.0
Namibia	6	2,598	0	4.7	70.0	5.0	25.0
Niger	4	183	1	28.1	67.0	3.0	30.0
Burkina Faso	13	711	1	6.5	51.0	3.0	46.0
Burundi	10	1,017	0	2.9	77.0	6.0	17.0
Benin	10	1,001	0	1.3	45.0	23.0	32.0
Botswana	2	1,107	0	8.1	41.0	18.0	41.0
Madagascar	337	14,286	17	4.9	98.0	1.0	1.0
Malawi	16	946	1	8.4	86.0	4.0	11.0
Mari	60	3,537	5	8.6	98.0	0.0	2.0
South Africa	45	827	16	34.6	63.0	10.0	27.0
Mauritania	0	98	1	337.5	91.0	2.0	7.0
Mozambique	100	3,686	1	0.9	78.0	3.0	19.0
Morocco	29	845	10	36.0	88.0	2.0	10.0
Libya	1	113	6	832.9	83.0	5.0	12.0
Rwanda	10	837	0	1.6	68.0	8.0	24.0
Lesotho	5	2,437	0	0.8	9.0	46.0	46.0

Source: "The World Development Indicators 2017," The World Bank

2.27 Ocean-dumping of Waste

(Unit: 10,000 t)

	Industrial waste	Non-industrial waste	Dredged soil	Total
1996	347	247	1,187	1,781
1997	333	240	647	1,220
1998	320	219	705	1,244
1999	292	189	663	1,144
2000	314	171	543	1,027
2001	285	149	627	1,061
2002	263	127	559	949
2003	284	100	658	1,042
2004	292	87	968	1,346
2005	272	77	425	774
2006	255	64	507	827
2007	255	4	369	628
2008	264	0	304	568
2009	208	0	236	444
2010	183	0	255	438
2011	178	0	203	381
2012	173	0	251	424
2013	129	0	223	352
2014	102	0	254	356
2015	64	0	238	302

Note:
- "Total" may not be consistent with a sum of each column due to rounding at the first decimal place.
- Ocean dumping of non-industrial waste has been prohibited since April 1st, 2007.

Sources: ・Japan Coast Guard (up to March, 2007)
・Report based on Act on Prevention of Marine Pollution and Maritime Disaster（From April, 2007）

2.28 Consumption of fertilizer by country

(Unit: 1,000 t)

Country (region)	Nitrogen fertilizer（N）			Phosphatic fertilizer（P_2O_5）			Potash fertilizer（K_2O）		
	2012	2013	2014	2012	2013	2014	2012	2013	2014
World	**106,282**	**107,080**	**108,937**	**45,469**	**45,689**	**46,698**	**34,345**	**35,502**	**37,655**
Asia									
Japan	433	437	401	391	360	377	260	275	278
Iran	308	261	262	140	219	170	22	17	32
India	16,860	* 16,732	* 16,935	6,947	* 5,941	* 6,367	1,989	* 2,058	* 2,517
Indonesia	2,947	2,791	2,909	681	749	768	1,200	1,200	1,300
Uzbekistan	634	658	687	186	191	211	45	67	69
South Korea	303	238	254	213	151	168	216	151	169
Saudi Arabia	438	360	335	685	535	501	4	7	12
Thailand	1,571	1,623	1,521	503	602	452	439	583	587
China	30,566	30,732	30,911	14,853	15,096	15,435	12,744	13,064	13,401
Turkey	1,432	1,584	1,492	532	623	570	101	106	117
Pakistan	2,847	3,235	3,134	669	866	926	20	20	30
Bangladesh	1,130	1,112	1,230	500	500	565	368	343	346
Philippines	424	287	690	100	74	174	46	40	160
Vietnam	1,164	1,607	1,393	459	599	592	502	623	562
Malaysia	478	441	508	342	402	460	733	802	1,000
North America									
USA	12,938	12,529	12,428	3,972	4,226	4,251	4,267	4,515	4,594
Canada	2,503	2,893	2,835	737	809	901	350	380	380
Mexico	1,291	1,290	1,362	321	307	383	203	212	177
South America									
Argentina	721	772	780	638	622	595	45	41	34
Colombia	619	569	609	294	287	284	266	235	294
Brazil	4,251	3,954	3,872	4,343	4,676	4,752	4,601	4,721	5,395
Europe									
UK	999	1,060	* 1,049	194	201	* 196	267	284	* 272
Italy	685	* 600	600	208	* 171	171	181	* 110	110
Ukraine	928	1,041	1,020	220	236	241	194	213	209
Spain	843	962	1,102	377	433	399	321	355	358
Czech Republic	340	332	329	41	41	42	22	30	34
Germany	1,649	1,675	1,823	284	284	301	421	457	460
Hungary	303	340	311	62	72	65	63	70	60
France	1,915	2,005	* 2,200	253	259	*188	337	310	*389
Bulgaria	318	380	373	69	70	73	17	24	18
Belarus	557	535	456	221	208	153	720	683	609
Poland	1,179	1,098	1,632	374	341	352	390	496	547
Russia	1,180	1,167	1,194	422	438	466	276	256	274
Africa									
Egypt	1,265	1,347	1,311	373	290	406	32	47	52
Nigeria	262	416	272	62	80	57	74	53	41
South Africa	430	417	437	190	184	193	124	121	128
Oceania									
Australia	1,125	1,222	1,405	884	842	908	188	210	232
New Zealand	301	308	328	518	469	512	42	39	40

Note:
* Indicates a provisional or estimated value.

Source: "World Statistics 2017," Ministry of Internal Affairs and Communications

2.29 Changes in land-use by country

(Unit: 1,000 ha)

Country	Arable land, permanent cropland								Permanent meadows							
	1995	2000	2005	2010	2011	2012	2013	2014	1995	2000	2005	2010	2011	2012	2013	2014
Japan	5,038	4,830	4,692	4,593	4,561	4,549	4,537	4,519	405	428						
China	130,880	130,027	125,439	122,538	122,533	122,527	122,524	122,524	392,834	392,834	392,834	392,831	392,834	392,834	392,834	392,834
India	169,911	170,130	169,674	169,234	169,369	169,346	169,372	169,360	11,034	10,845	10,452	10,339	10,301	10,296	10,240	10,240
South Korea	1,985	1,918	1,824	1,715	1,698	1,730	1,711	1,691	63	55	57	58	58	58	58	57
Australia	40,300	47,600	49,742	42,968	48,078	47,493	46,611	47,307	423,048	407,900	395,407	355,612	361,595	357,981	350,004	358,962
New Zealand	1,625	1,550	488	570	542	580	618	657	13,350	13,863	11,224	10,838	10,829	10,629	10,488	10,459
Canada	52,312	52,178	52,139	48,418	47,894	50,846	50,751	50,656	15,682	15,435	15,430	14,851	14,703	14,600	14,600	14,600
Mexico	24,952	25,378	25,903	26,158	25,658	25,808	25,668	25,670	81,243	80,952	80,667	80,547	81,047	80,897	81,037	81,035
USA	184,139	178,068	167,815	158,526	154,269	157,708	154,842	157,205	236,000	236,331	243,969	249,900	250,400	250,999	251,000	251,000
Austria	1,492	1,470	1,447	1,429	1,425	1,420	1,419	1,417	1,489	1,470	1,410	1,350	1,332	1,315	1,297	1,297
Belgium		883	864	856	847	825	838	839		507	519	500	489	507	498	492
Czech Republic	3,378	3,319	3,286	3,248	3,240	3,233	3,225	3,219	902	961	974	986	989	992	994	997
Denmark	2,328	2,289	2,339	2,426	2,503	2,424	2,414	2,436	398	358	368	200	187	200	195	193
Finland	2,146	2,192	2,241	2,259	2,255	2,253	2,228	2,234	98	26	33	33	32	32	31	33
France	19,348	19,495	19,488	19,311	19,281	19,286	19,302	19,328	10,802	10,312	9,902	9,615	9,597	9,559	9,472	9,438
Germany	12,061	12,020	12,102	12,045	12,075	12,034	12,076	12,074	5,282	5,048	4,929	4,655	4,644	4,630	4,621	4,651
Greece	3,904	3,854	3,775	3,704	3,700	3,676	3,746	3,725	5,260	4,675	4,580	4,490	4,480	4,470	4,460	4,450
Hungary	5,031	4,803	4,806	4,580	4,578	4,579	4,581	4,585	1,148	1,051	1,057	763	759	759	759	761
Iceland	135	129	129	123	122	121	121	121	1,764	1,760	1,753	1,751	1,751	1,751	1,751	1,751
Ireland	1,033	1,079	1,187	1,013	1,063	1,171	1,114	1,059	3,356	3,333	3,115	3,555	3,492	3,362	3,363	3,407
Italy	10,928	11,284	10,334	9,630	9,241	9,560	9,087	9,121	4,405	4,353	4,402	4,698	4,612	4,169	4,543	4,041
Netherlands	916	944	1,143	1,059	1,042	1,047	1,075	1,081	1,048	1,012	795	813	816	795	773	758
Norway	992	884	867	830	822	816	811	811	135	158	169	176	177	177	176	176
Poland	14,575	14,330	12,519	11,219	11,488	11,323	11,204	11,304	4,047	4,083	3,387	3,230	3,291	3,206	3,206	3,120
Portugal	2,900	2,397	2,052	1,862	1,849	1,856	1,900	1,885	1,024	1,433	1,769	1,792	1,801	1,809	1,817	1,817
Russia	129,400	126,238	123,581	120,650	121,650	121,350	123,840	124,722	87,000	90,924	92,099	93,302	93,000	93,000	93,000	93,000
Slovakia	1,606	1,575	1,417	1,417	1,412	1,413	1,415	1,413	840	865	524	527	518	515	514	511
Spain	18,753	18,304	17,844	17,221	16,992	17,539	17,133	17,188	10,966	11,462	11,320	10,324	10,022	9,403	9,600	9,390
Switzerland	190	191	192	190	190	190	190	190	1,032	1,032	1,032	1,032	1,032	1,032	1,032	1,032
Sweden	2,767	2,706	2,703	2,634	2,619	2,608	2,605	2,597	500	447	513	451	447	441	443	436
Turkey	27,115	26,379	26,606	24,395	23,630	23,790	23,806	23,944	12,378	14,100	14,617	14,617	14,617	14,617	14,617	14,617
UK	5,993	5,928	5,776	6,016	6,107	6,258	6,310	6,278	11,386	11,036	11,180	11,208	11,057	10,924	10,940	10,954
World	1,535,389	1,537,453	1,554,217	1,547,465	1,560,439	1,574,173	1,576,532	1,584,563	3,393,633	3,417,095	3,386,196	3,321,977	3,319,784	3,315,544	3,309,699	3,315,542

Note:
Includes estimation.

Source: Compiled from FAOSTAT, Food and Agriculture Organization (http://faostat.fao.org/)

2.30 Threatened species in each country (1)

	Mammals	Birds	Reptiles	Amphibians	Fishes	Mollusks	Others	Plants	Fungi , Protists	Total
●Africa										
North Africa										
Algeria	14	14	8	3	40	10	26	18	0	**133**
Egypt	19	14	12	0	52	0	56	3	0	**156**
Libya	11	6	6	0	32	0	4	3	0	**62**
Morocco	18	16	13	2	54	35	29	37	1	**205**
Tunisia	14	10	6	1	39	6	12	7	0	**95**
Western Sahara	10	4	1	0	31	0	3	0	0	**49**
Sub-Saharan Africa										
Angola	18	29	5	0	51	5	4	34	0	**146**
Benin	13	10	6	0	38	0	3	17	0	**87**
Botswana	10	14	0	0	2	0	0	2	0	**28**
Burkina Faso	10	10	3	0	4	1	0	3	0	**31**
Burundi	14	15	0	1	17	4	3	8	0	**62**
Cameroon	44	27	12	56	119	11	16	491	0	**776**
Cape Verde	4	6	6	0	34	12	1	3	0	**66**
Central African Republic	15	13	4	0	3	0	0	24	0	**59**
Chad	15	13	4	0	1	4	0	6	0	**43**
Comoros	5	14	5	0	9	0	73	7	0	**113**
Republic of Congo	17	6	4	0	55	5	2	45	0	**134**
Congo, The Democratic Republic of the	34	39	7	10	92	43	10	113	0	**348**
Côte d'Ivoire	30	21	7	14	57	3	3	113	0	**248**
Djibouti	8	11	1	0	18	1	56	3	0	**98**
Equatorial Guinea	24	7	7	5	42	0	5	88	0	**178**
Eritrea	12	17	6	0	24	1	57	4	0	**121**
Ethiopia	30	32	2	12	14	4	11	42	0	**147**
Gabon	20	7	5	3	71	0	3	162	0	**271**
Gambia	9	12	5	0	34	0	2	5	0	**67**
Ghana	20	20	7	11	56	0	5	120	0	**239**
Guinea	27	19	8	5	75	1	6	44	0	**185**
Guinea-Bissau	14	10	7	0	39	0	2	5	0	**77**
Kenya	27	42	11	11	72	19	67	230	0	**479**
Lesotho	3	7	0	0	1	0	3	4	0	**18**
Liberia	22	13	7	4	63	1	10	52	0	**172**
Madagascar	120	35	139	141	108	35	87	609	0	**1,274**
Malawi	10	18	4	6	98	7	9	24	0	**176**
Mari	13	15	4	0	2	0	0	8	0	**42**
Mauritania	18	16	6	0	43	0	3	0	0	**86**
Mauritius	7	10	10	0	20	29	90	90	0	**256**
Mayotte	1	3	7	0	7	0	69	0	0	**87**
Mozambique	15	29	13	5	67	3	64	91	0	**287**
Namibia	15	30	5	1	33	0	4	27	0	**115**
Niger	13	11	2	0	4	1	0	3	0	**34**
Nigeria	30	22	12	13	71	1	16	197	0	**362**
Réunion	5	6	0	0	13	17	71	17	0	**129**
Rwanda	24	18	0	2	7	0	4	8	0	**63**
St. Helena, Association and Tristan da Cunha	4	21	2	0	14	1	14	44	0	**100**
Sao Tome and Principe	5	14	5	3	25	1	4	38	0	**95**
Senegal	18	17	8	0	55	10	3	12	0	**123**
Seychelles	6	12	11	6	22	36	284	62	0	**439**
Sierra Leone	22	15	8	3	56	3	5	66	0	**178**
Somalia	15	19	5	0	29	2	60	46	0	**176**
South Africa	27	48	21	18	108	22	180	146	0	**570**
South Sudan	12	19	3	0	0	0	0	15	0	**49**
Sudan	13	23	5	0	26	0	50	16	0	**133**
Swaziland	8	11	0	0	4	0	0	11	0	**34**
Tanzania, United Republic of	37	50	34	61	175	11	114	602	0	**1,084**
Togo	12	11	5	2	35	0	3	12	0	**80**
Uganda	28	27	3	2	60	13	11	52	0	**196**
Zambia	13	18	2	0	20	13	1	20	0	**87**
Zimbabwe	10	17	4	7	3	0	5	17		**63**
Antarctica										
The Antarctic Continent	2	4	0	0	0	0	0	0	0	**6**
Bouvet Island	1	1	0	0	1	0	0	0	0	**3**
French Southern Territories	3	13	4	0	5	0	0	0	0	**25**
Heard Island and McDonald Islands	1	10	0	0	1	0	0	0	0	**12**
South Georgia and the South Sandwich Islands	3	6	0	0	0	0	0	0	0	**9**
●Asia										
East Asia										
China	74	93	43	87	133	15	61	573	1	**1,080**
Hong Kong	3	21	5	5	13	1	7	9	0	**64**
Japan	28	45	14	20	77	33	138	47	2	**404**
Korea, Democratic People's Republic of	10	28	2	1	17	0	3	17	0	**78**
Korea, Republic of	11	32	3	3	25	0	5	31	1	**111**
Macao	0	4	1	0	5	0	1	0	0	**11**
Mongolia	11	25	0	0	2	0	3	0	0	**41**
Taiwan, Province of China	10	24	9	10	70	1	127	85	1	**337**
North Asia										
Belarus	4	9	0	0	2	3	6	1	0	**25**
Moldavia	5	12	2	0	8	2	4	2	0	**35**
Russian Federation	33	55	9	0	39	8	31	56	4	**235**
Ukraine	10	18	1	0	24	6	25	17	1	**102**
South and Southeast Asia										
Bangladesh	36	36	23	1	27	0	7	21	0	**151**
Bhutan	25	20	3	1	3	0	1	18	0	**71**
British Indian Ocean Territory	0	0	2	0	13	0	69	1	0	**85**
Brunei Darussalam	33	25	8	3	12	0	8	104	0	**193**
Cambodia	38	28	20	8	47	1	78	35	0	**255**
Disputed territory [includes Paracel Islands and Spratly Islands]	0	0	0	0	3	0	1	0	0	**4**
India	92	87	54	75	222	7	128	387	0	**1,052**
Indonesia	187	154	33	32	159	6	284	427	0	**1,282**
Lao Peoples Democratic Republic	45	24	18	5	55	16	5	41	0	**209**
Malaysia	72	53	31	48	83	37	227	720	0	**1,271**
Maldives	2	0	3	0	24	0	46	0	0	**75**
Myanmar	48	52	30	2	51	3	74	61	0	**321**
Nepal	29	36	9	3	7	1	2	17	0	**104**
Philippines	39	92	39	48	88	3	234	239	0	**782**
Singapore	13	17	6	0	27	0	173	57	0	**293**
Sri Lanka	29	16	12	56	54	0	130	291	0	**588**
Thailand	57	54	28	3	106	15	196	152	0	**611**
Timor-Leste	5	7	2	0	9	0	1	1	0	**25**
Vietnam	55	47	49	29	80	30	122	204	0	**616**

2.30 Threatened species in each country (2)

	Mammals	Birds	Reptiles	Amphibians	Fishes	Mollusks	Others	Plants	Fungi , Protists	**Total**
West and Central Asia										
Afghanistan	11	17	1	1	5	0	2	5	0	**42**
Armenia	9	15	7	0	3	2	7	71	0	**114**
Azerbaijan	8	18	9	1	12	2	5	42	0	**97**
Bahrain	3	6	4	0	10	0	13	0	0	**36**
Cyprus	6	7	5	0	24	1	11	18	0	**72**
Georgia	9	15	7	1	11	4	11	61	1	**120**
Iran, Islamic Republic of	18	27	14	4	43	2	22	4	0	**134**
Iraq	14	18	3	1	17	1	16	2	0	**72**
Israel	15	18	10	2	45	11	63	10	0	**174**
Jordan	13	13	6	0	15	6	55	5	0	**113**
Kazakhstan	16	27	1	1	14	2	5	16	0	**82**
Kuwait	6	11	4	0	15	0	13	0	0	**49**
Kirghizstan	5	16	2	0	3	0	4	14	0	**44**
Lebanon	10	12	8	0	28	9	8	11	0	**86**
Oman	10	13	8	0	31	2	29	6	0	**99**
Pakistan	25	32	12	0	41	0	18	12	0	**140**
Palestine Territory, Occupied	3	14	4	1	2	2	2	3	0	**31**
Qatar	2	8	3	0	13	0	13	0	0	**39**
Saudi Arabia	10	19	3	0	36	1	58	4	0	**131**
Syrian Arab Republic	16	18	9	0	51	9	11	18	0	**132**
Tajikistan	7	15	2	0	5	0	3	12	0	**44**
Turkey	18	20	20	11	131	45	37	106	1	**389**
Turkmenistan	10	20	2	0	11	1	6	4	0	**54**
United Arab Emirates	8	12	4	0	17	0	15	0	0	**56**
Uzbekistan	10	20	2	0	7	1	2	17	0	**59**
Yemen	9	18	7	1	33	2	66	162	0	**298**
●Europe										
Europe										
Albania	3	10	4	2	44	49	19	0	0	**131**
Andorra	2	2	1	0	0	3	5	0	0	**13**
Austria	3	12	1	0	11	43	28	13	8	**119**
Belgium	2	8	0	0	13	6	8	0	1	**38**
Bosnia and Herzegovina	4	8	3	1	35	17	22	1	0	**91**
Bulgaria	8	18	2	0	22	25	23	6	0	**104**
Croatia	9	15	4	2	64	45	28	8	1	**176**
Czech Republic	3	10	0	0	2	6	18	10	5	**54**
Denmark	2	8	0	0	18	5	10	1	3	**47**
Estonia	1	9	0	0	5	3	3	0	2	**23**
Faeroe Islands	4	5	0	0	12	0	0	0	1	**22**
Finland	2	10	0	0	6	3	7	2	6	**36**
France	9	14	5	2	52	91	59	35	8	**275**
Germany	5	11	0	0	24	31	26	12	7	**116**
Gibraltar	4	4	0	0	18	3	2	0	0	**31**
Greece	11	16	9	5	80	65	127	59	1	**373**
Greenland	9	4	0	0	9	0	0	1	0	**23**
Guernsey	0	0	0	0	5	0	0	0	0	**5**
Holly See (Vatican City State)	1	0	0	0	0	0	0	0	0	**1**
Hungary	3	13	1	0	9	8	21	9	2	**66**
Iceland	6	5	0	0	16	0	0	0	0	**27**
Ireland	5	8	1	0	27	2	4	1	2	**50**
Isle of Man	1	0	0	0	2	0	0	0	0	**3**
Italy	8	15	4	9	51	72	118	71	7	**355**
Jersey	0	0	0	0	5	0	1	0	0	**6**
Latvia	1	10	0	0	6	4	8	0	1	**30**
Liechtenstein	0	2	0	0	0	2	2	0	0	**6**
Lithuania	2	9	0	0	6	2	5	1	1	**26**
Luxembourg	0	3	0	0	1	5	2	0	0	**11**
Macedonia, the former Yugoslav Republic of	6	13	2	0	13	61	14	0	0	**109**
Malta	2	5	1	0	22	3	2	4	0	**39**
Monaco	3	0	0	0	15	0	3	0	0	**21**
Montenegro	6	14	4	1	32	20	19	2	0	**98**
Netherlands	3	9	0	0	15	5	5	0	3	**40**
Norway	8	9	0	0	23	3	7	3	11	**64**
Poland	5	11	0	0	8	7	15	10	3	**59**
Portugal	13	13	4	1	63	76	27	82	2	**281**
Romania	8	18	2	0	22	11	38	5	0	**104**
San Marino	0	0	0	0	0	0	1	0	0	**1**
Serbia	6	13	1	0	15	5	25	5	1	**71**
Slovakia	4	11	0	0	5	6	18	7	3	**54**
Slovenia	6	8	2	2	33	32	49	7	4	**143**
Spain	17	17	20	6	78	141	116	217	5	**617**
Svalbard and Jan Mayen	3	2	0	0	2	0	0	0	0	**7**
Sweden	1	9	0	0	15	4	11	4	10	**54**
Switzerland	3	7	0	1	9	10	34	4	6	**74**
United Kingdom	5	9	1	0	47	5	13	16	6	**102**
●North and Central America										
Central America										
Belize	9	5	8	4	43	0	12	36	0	**117**
Costa Rica	11	24	12	61	61	1	30	140	0	**340**
El Salvador	6	6	10	10	15	0	10	29	0	**86**
Guatemala	15	15	32	78	36	2	11	101	0	**290**
Honduras	7	12	40	56	42	0	21	123	0	**301**
Mexico	95	64	97	219	180	8	95	401	0	**1,159**
Nicaragua	7	15	9	10	37	2	18	46	0	**144**
Panama	17	23	10	49	54	0	22	208	0	**383**

2.30 Threatened species in each country (3)

	Mammals	Birds	Reptiles	Amphibians	Fishes	Mollusks	Others	Plants	Fungi , Protists	**Total**
Caribbean										
Anguilla	1	0	8	0	29	0	10	4	0	**52**
Antigua and Barbuda	2	2	7	0	29	0	11	4	0	**55**
Aruba	2	1	2	0	23	1	1	2	0	**32**
Bahamas	6	8	8	0	44	1	11	8	0	**86**
Barbados	3	3	7	0	29	0	11	3	0	**56**
Bermuda Islands	4	2	4	0	26	0	28	8	0	**72**
Bonaire, Saint Eustatius and Saba	3	2	6	0	31	0	11	3	0	**56**
Cayman Islands	1	1	7	0	32	1	10	22	0	**74**
Cuba	12	17	16	49	44	0	23	179	0	**340**
Curaçao	3	2	5	0	28	0	11	2	0	**51**
Dominica	3	6	4	2	29	0	11	11	0	**66**
Dominican Republic	6	15	44	32	29	0	16	42	0	**184**
Grenada	4	1	7	1	28	0	10	3	0	**54**
Guadeloupe	4	4	8	3	29	1	15	9	0	**73**
Haiti	5	15	50	49	30	0	14	42	0	**205**
Jamaica	6	10	21	15	30	0	15	214	0	**311**
Martinique	1	5	9	2	20	2	0	9	0	**48**
Montserrat	2	3	4	1	28	0	11	6	0	**55**
Puerto Rico	2	9	14	14	30	0	0	57	0	**126**
Saint Barthélemy	1	0	3	0	14	0	11	2	0	**31**
Saint Kitts and Nevis	2	2	6	1	29	0	10	2	0	**52**
Saint Lucia	2	6	7	0	30	0	11	6	0	**62**
Saint Martin (French part)	2	1	7	0	29	0	10	3	0	**52**
Saint Vincent and the Grenadines	2	3	8	1	29	0	10	5	0	**58**
Sint Maarten (Dutch part)	2	1	7	0	29	0	10	2	0	**51**
Trinidad and Tobago	2	6	7	8	35	0	10	2	0	**70**
Turks and Caicos Islands	2	3	7	0	29	0	10	9	0	**60**
Virgin Islands, British	1	2	14	2	28	0	10	10	0	**67**
Virgin Islands, U.S.	1	2	14	2	27	0	0	12	0	**58**
North America										
Canada	14	16	6	1	43	7	20	10	4	**121**
St. Pierre and Miquelon	4	5	0	0	3	0	0	0	0	**12**
United States	35	79	37	56	250	303	277	465	12	**1,514**
●South America										
South America										
Argentina	36	52	15	30	39	0	14	70	0	**256**
Bolivia, Plurinational States of	21	54	6	35	8	2	1	104	0	**231**
Brazil	82	169	29	36	86	22	33	532	0	**989**
Chile	19	34	7	27	25	1	12	72	0	**197**
Columbia	54	126	32	215	97	4	48	257	0	**833**
Ecuador	46	104	39	175	60	49	21	1,856	6	**2,356**
Falkland Islands (Malvinas)	4	9	0	0	5	0	0	5	0	**23**
French Guiana	8	8	7	3	29	0	0	18	0	**73**
Guiana	11	15	5	5	31	0	1	26	0	**94**
Paraguay	10	27	3	0	0	0	0	19	0	**59**
Peru	53	121	15	111	50	4	4	326	0	**684**
Suriname	9	10	6	1	30	0	1	27	0	**84**
Uruguay	10	22	5	5	40	0	2	22	0	**106**
Venezuela, Bolivarian Republic of	35	51	18	73	43	1	25	82	0	**328**
●Oceania										
Oceania										
American Samoa	1	8	6	0	12	5	59	1	0	**92**
Australia	62	52	43	47	119	174	340	93	1	**931**
Christmas Island	3	3	4	0	10	0	18	1	0	**39**
Cocos (Keeling) Islands	2	0	1	0	10	0	20	0	0	**33**
Cook Islands	1	16	3	0	12	0	32	11	0	**75**
Fiji	6	13	15	1	19	68	97	71	0	**290**
French Polynesia	0	34	3	0	29	31	31	47	0	**175**
Guam	2	14	5	0	14	6	54	4	0	**99**
Kiribati	1	6	2	0	14	1	80	0	0	**104**
Marshall Islands	2	4	4	0	18	1	72	0	0	**101**
Micronesia, Federation States of	5	12	7	0	25	3	111	4	0	**167**
Nauru	1	2	0	0	11	0	68	0	0	**82**
New Caledonia	9	16	54	0	36	28	97	286	0	**526**
New Zealand	9	69	15	3	34	32	14	21	2	**199**
Niue	1	8	4	0	9	0	30	0	0	**52**
Norfolk Island	0	11	2	0	6	12	11	2	0	**44**
Northern Mariana Islands	4	17	4	0	15	4	53	5	0	**102**
Palau	4	6	3	0	20	40	106	4	0	**183**
Papua New Guinea	39	43	11	11	57	2	179	152	0	**494**
Pitcairn	1	10	0	0	10	5	11	7	0	**44**
Samoa	2	6	5	0	16	1	61	2	0	**93**
Solomon Islands	20	26	6	2	24	2	149	17	0	**246**
Tokelau	0	1	3	0	10	0	35	0	0	**49**
Tonga	2	5	5	0	16	4	43	4	0	**79**
Tuvalu	1	1	3	0	13	1	77	0	0	**96**
United States Minor Outlying Islands	0	11	2	0	13	0	47	0	0	**73**
Vanuatu	7	8	4	0	17	3	88	10	0	**137**
Wallis and Futuna	0	9	2	0	13	0	64	1	0	**89**

Source: "IUCN Red List version 2016,3 (Updated 2016,12)"

2.31 Areas of agricultural land by country

(Unit: 1,000 ha)

Country (region)	Land area	Arable land		Permanent crops		Others
	2014	2013	2014	2013	2014	2014
World	**13,000,000**	**1,407,843**	**1,417,153**	**163,893**	**164,650**	**11,418,197**
Asia						
Japan	36,456	4,237	4,223	303	296	31,937
India	297,319	157,000	156,360	12,800	13,000	127,959
Indonesia	181,157	23,500	23,500	22,000	22,500	135,157
Kazakhstan	269,970	29,395	29,395	75	132	240,443
South Korea	9,748	1,496	1,476	208	215	8,057
Saudi Arabia	214,969	3,068	3,502	230	145	211,322
Thailand	51,089	16,810	16,810	4,500	4,500	29,779
China	938,821	105,720	105,700	15,800	16,020	817,101
Turkey	76,963	20,574	20,706	3,213	3,238	53,019
Pakistan	77,088	30,470	30,440	855	812	45,836
Bangladesh	13,017	7,678	7,669	850	830	4,518
Philippines	29,817	5,590	5,590	5,350	5,350	18,877
Malaysia	32,855	954	954	6,500	6,600	25,301
North America						
USA	914,742	151,837	154,605	2,600	2,600	757,537
Canada	909,351	45,915	46,015	4,831	4,641	858,695
Mexico	194,395	22,975	22,993	2,676	2,677	168,725
South America						
Argentina	273,669	36,699	39,200	1,000	1,000	233,469
Brazil	835,814	76,008	80,017	7,000	6,572	749,225
Europe						
Iceland	10,025	121	121	-	-	9,904
Ireland	6,889	1,113	1,058	1	1	5,830
UK	24,193	6,265	6,234	46	45	17,915
Italy	29,414	6,827	6,728	2,442	2,393	20,293
Ukraine	57,929	32,526	32,531	894	893	24,505
Estonia	4,239	632	648	6	6	3,585
Austria	8,252	1,354	1,352	65	65	6,835
Netherlands	3,369	1,038	1,045	36	36	2,288
Greece	12,890	2,547	2,600	1,150	1,125	9,165
Switzerland	3,952	404	400	24	26	3,526
Sweden	40,731	2,596	2,588	9	9	38,134
Spain	50,021	12,570	12,278	4,560	4,910	32,833
Slovakia	4,809	1,394	1,394	20	19	3,395
Czech Republic	7,721	3,149	3,143	76	76	4,502
Denmark	4,226	2,408	2,432	6	4	1,790
Germany	34,890	11,876	11,871	200	203	22,816
Norway	36,525	806	807	5	5	35,713
Hungary	9,053	4,403	4,404	182	181	4,468
Finland	30,389	2,224	2,231	4	3	28,155
France	54,756	18,306	18,333	1,002	995	35,427
Belgium	3,028	816	817	24	22	2,189
Poland	30,619	10,792	10,928	398	376	19,315
Portugal	9,161	1,116	1,137	714	748	7,275
Russia	1,637,687	122,240	123,122	1,600	1,600	1,512,965
Africa						
Egypt	99,545	2,738	2,670	812	1,075	95,800
Nigeria	91,077	34,000	34,000	6,700	6,500	50,577
South Africa	121,309	12,500	12,500	413	413	108,396
Oceania						
Australia	768,230	46,219	46,957	380	350	720,923
New Zealand	26,331	547	590	71	67	25,674

Notes:

The definition of land use may differ from each country (region).

Land area: Total land area, excluding inland water (major rivers and lakes).

Arable land: The land cultivated and harvested with short-term crops (land for successive-cropping is not counted twice).
Includes meadows for pasture grazing and temporary fallow land (for less than 5 years).

Permanent crops: The land cultivated with long-term crops which do not have to be replanted for several years (such as cocoa, coffee and rubber). Including areas of bush, orchards, tree nuts and vine crops. Excluding land planted with trees for timber.

Others: Permanent pasture, woodland, woods, building sites, roads, barren land and other land which is not classified in above items.

Source: "World Statistics," Ministry of Internal Affairs and Communications

2.32 Forest area in each country

Country (region)[1]	Forest（1,000 ha）		Percentage of forest in national land (%)	The changes between 2005 ~ 2015 (1,000 ha) [2]
	2005	2015	2015	
World	**4,015,673**	**3,999,134**	**-**	**-16,539**
Russian Federation	808,790	814,931	52	6,141
Brazil	506,734	493,538	62	-13,196
Canada	347,576	347,069	40	-507
USA	304,757	310,095	35	5,338
China	193,044	208,321	25	15,277
Democratic Republic of the Congo	155,692	152,578	71	-3,114
Australia	127,641	124,751	24	-2,890
Indonesia	97,857	91,010	63	-6,847
Peru	75,528	73,973	62	-1,555
India	67,709	70,682	24	2,973
Mexico	67,083	66,040	38	-1,043
Colombia	60,201	58,502	62	-1,700
Angola	59,104	57,856	46	-1,248
Bolivia	58,734	54,764	52	-3,970
Zambia	50,301	48,635	71	-1,666
Venezuela	47,713	46,683	58	-1,030
United Republic of Tanzania	49,920	46,060	57	-3,860
Mozambique	40,079	37,940	59	-2,139
Papua New Guinea	33,586	33,559	81	-27
Myanmar	33,321	29,041	57	-4,280
Sweden	28,218	28,073	73	-145
Argentina	30,186	27,112	13	-3,074
Japan	24,935	24,958	68	23
Gabon	22,000	23,000	89	1,000
Congo	22,471	22,334	94	-137
Finland	22,143	22,218	75	75
Malaysia	20,890	22,195	68	1,305
Central Africa Republic	22,326	22,170	75	-156
Sudan	20,954	19,210	12	-1,744
Cameroon	21,016	18,816	54	-2,200
Lao People's Democratic Republic	16,870	18,761	93	1,892
Spain	17,282	18,418	45	1,136
Chile	16,042	17,735	30	1,693
France	15,861	16,989	31	1,128
Guyana	16,602	16,526	92	-76
Thailand	16,100	16,399	32	299
Suriname	15,371	15,332	95	-39
Paraguay	18,475	15,323	39	-3,152
Viet nam	13,077	14,773	48	1,696
Zimbabwe	17,259	14,062	36	-3,197
Mongolia	11,308	12,553	8	1,245
Ecuador	13,335	12,548	51	-787
Ethiopia	13,000	12,499	18	-501
Madagascar	12,838	12,473	29	-365
Norway	12,092	12,112	43	20
Turkey	10,662	11,715	18	1,053
Germany	11,384	11,419	33	35
Botswana	11,943	10,840	50	-1,103
Iran	10,692	10,692	6	0
Cote d'Ivoire	10,405	10,401	36	-4

Notes:

Forest is defined as woodland where 10% or more of its tree-crown area is covered with trees 5m high or higher, including seedlings expected to be that high in the future. Forest includes the national parks, natural conservation areas, other protected areas, and windbreaks which are 0.5 ha or more, and 20m wide or wider, additionally, plantations of rubber and cork oak. Excludes trees for agricultural production such as orchards and trees which were grown as agro-forestry tree.

1. Top 50 countries with the largest forest areas in 2015(descending order).
2. A net change after offsetting expansion by plantation against losses and increases in natural forests, calculated from the forest area in 2015 and 2005.

Source: "Global Forest Resources Assessment 2015," Food and Agriculture Organization

2.33 Performance records of Environment-related ODA

Performance records in line with aid form

（Based on aid commitments, unit: million dollar & %）

	Grant aid		Government aid, etc.		Technical aid		Total	
2011	1,044.35	(27.4)	4,039.98	(47.3)	240.57	(6.2)	5,324.91	[32.8]
2012	450.54	(13.5)	5,824.26	(56.5)	373.29	(10.1)	6,648.08	[38.4]
2013	524.46	(9.4)	6,552.38	(49.8)	265.26	(9.3)	7,342.10	[34.0]
2014	270.81	(9.6)	6,665.68	(61.2)	251.60	(9.5)	7,188.09	[43.9]
2015	375.48	(12.9)	8,886.76	(62.4)	195.03	(8.2)	9,457.27	[48.4]

Notes:
- The data are based on DAC_CRS statistics.
- The figures in ( ) under the column of types of aids indicate the ratio of each type to the total.
- ( ) under the total column is percentage of total environment-related ODA in the grand total ODA amount.
- Includes aids for graduated countries.

Source: "ODA reference handbook 2016," Ministry of Foreign Affairs

Small classification of aid between the two countries.

（Based on aid commitments, unit: million dollar & %）

Year	Conservation of environment in general		Biodiversity		Climate change		Combat Desertification		Total
					Alleviation	Adaptation			
2011	25.27	(0.5)	1,476.98	(27.7)	3,827.78 (71.9)	2,368.74 (44.5)	585.09	(11.0)	5,324.91
2012	22.55	(0.3)	450.10	(6.8)	4,486.03 (67.5)	2,479.20 (37.3)	367.89	(5.5)	6,648.08
2013	18.33	(0.2)	109.11	(1.5)	5,278.82 (71.9)	2,224.54 (30.3)	116.64	(1.6)	7,342.10
2014	19.45	(0.3)	1,124.00	(15.6)	4,787.22 (66.6)	2,329.02 (32.4)	147.36	(2.1)	7,188.09
2015	15.06	(0.2)	1,836.49	(19.4)	6,342.35 (67.1)	2,935.88 (31.0)	80.64	(0.9)	9,457.27

Notes:
- The data are based on DAC_CRS statistics.
- ( ) are the rate (%) to the total each year.
- Includes aids for graduated countries.

Source: "ODA reference handbook 2016," Ministry of Foreign Affairs

Breakdown of Technical Aid (Number of persons)

	Accepted trainees	Dispatched experts	Dispatched Japan Overseas Cooperation Volunteers
2011	2,929	1,111	183
2012	6,756	2,912	173
2013	4,937	3,360	146
2014	3,391	3,159	84
2015	3,191	2,848	32

Note:
- The data are based on DAC_CRS statistics.
- "Dispatched Japan Overseas Cooperation Volunteers" include other volunteers such as Overseas cooperation senior volunteers and the like.
- "Accepted trainees" and "Dispatched experts" include numbers of persons who implemented projects through grants and contracts provided to public interest incorporated foundations and the like.

Source: "ODA reference handbook 2016." Ministry of Foreign Affairs

3.01 Area of forest converted by purpose

（Unit： ha）

Prefectures	Total	Land for factories and business sites	Land for houses and holiday homes	Golf courses and leisure facilities	Farmland	Common land	Others
Year 1990	231,747	17,772	19,082	36,102	86,667	37,571	34,543
Year 2000	151,767	14,961	14,521	41,633	20,094	36,984	23,574
Hokkaido	24,087	1,836	38	2,710	9,806	5,626	4,071
Aomori	3,150	481	61	570	389	1,247	402
Iwate	4,978	232	106	642	786	2,384	828
Miyagi	3,736	189	1,236	825	72	1,171	243
Akita	2,189	150	92	455	506	787	199
Yamagata	2,027	74	15	437	671	628	202
Fukushima	4,563	581	763	2,008	126	880	205
Ibaraki	4,259	947	610	1,495	127	761	319
Tochigi	4,650	405	670	2,253	405	305	612
Gunma	4,077	99	68	1,781	541	1,198	390
Saitama	1,251	132	203	490	3	125	298
Chiba	10,953	1,051	1,587	5,133	84	576	2,522
Tokyo	358	10	163	8	-	86	91
Kanagawa	136	57	34	6	2	32	5
Niigata	3,552	154	125	1,512	84	1,152	525
Toyama	632	81	9	247	14	175	106
Ishikawa	2,237	376	155	1,011	21	551	123
Fukui	1,835	130	109	260	105	514	717
Yamanashi	1,399	1	118	491	2	177	610
Nagano	5,803	299	365	1,492	991	1,579	1,077
Gifu	5,070	476	403	1,624	190	1,957	420
Shizuoka	3,222	353	317	273	303	1,290	686
Aichi	2,007	319	432	486	190	289	291
Mie	3,625	422	326	2,297	40	192	348
Shiga	1,567	167	163	680	13	466	78
Kyoto	1,602	248	93	369	178	474	240
Osaka	1,473	71	973	208	30	29	162
Hyogo	3,945	320	482	1,665	87	1,005	386
Nara	1,341	37	364	370	136	250	184
Wakayama	2,240	395	588	912	166	151	28
Tottori	2,446	368	161	366	469	1,011	71
Shimane	2,090	298	122	310	177	1,112	71
Okayama	3,232	613	76	587	175	1,546	235
Hiroshima	5,351	1,006	1,253	1,237	141	711	1,003
Yamaguchi	2,413	300	210	459	34	949	461
Tokushima	1,117	156	50	216	98	77	520
Kagawa	1,006	242	30	346	19	244	125
Ehime	1,907	60	64	197	116	594	876
Kochi	763	75	93	248	31	268	48
Fukuoka	2,429	326	516	902	63	214	408
Saga	1,272	152	55	198	158	485	224
Nagasaki	1,930	133	382	474	94	716	131
Kumamoto	2,214	385	50	914	221	589	55
Oita	1,158	129	230	592	12	6	189
Miyazaki	2,748	197	226	779	55	1,006	485
Kagoshima	3,628	320	228	947	853	960	320
Okinawa	4,099	108	107	151	1,310	439	1,984

Note:

・The figure of Year 1990 is the value for area which were converted between April 1980 and end of March 1990.

・The figure of Year 2000 is the value for area which were converted between April 1990 and end of March 2000.

Source: "Overview of the World Census of Agriculture, Forestry and Fisheries statistics 2016," Ministry of Agriculture, Forestry and Fisheries

3.02 Area of five categories on Basic Land Use Planning by prefecture

(Unit: ha, %) (March 31, 2015)

	Five categories																
	Urban area		Agricultural area		Forest area		Nature park area		Nature conservation area		Total		White areas		Total		Land area
Nationwide	10,114,003	27.3	17,061,928	46.1	25,252,387	68.2	5,437,679	14.7	105,196	0.3	57,971,194	156.5	252,762	0.7	58,223,957	157.2	37,040,982
Hokkaido	646,604	8.2	2,903,279	37.0	5,693,218	72.6	872,932	11.1	9,662	0.1	10,125,695	129.1	62,452	0.8	10,188,147	129.9	7,842,117
Aomori	230,459	23.9	480,534	49.8	649,455	67.3	115,088	11.9	10,887	1.1	1,486,423	154.1	11,918	1.2	1,498,341	155.4	964,474
Iwate	236,804	15.5	746,972	48.9	1,174,630	76.9	72,011	4.7	4,956	0.3	2,235,373	146.3	8,345	0.5	2,243,718	146.9	1,527,501
Miyagi	210,080	28.8	304,143	41.7	415,765	57.1	171,199	23.5	8,574	1.2	1,109,761	152.3	9,484	1.3	1,119,245	153.6	728,592
Akita	193,517	16.6	381,080	32.7	839,301	72.1	123,777	10.6	5,155	0.4	1,542,830	132.6	12,502	1.1	1,555,332	133.6	1,163,754
Yamagata	126,659	13.6	337,393	36.2	669,377	71.8	153,600	16.5	4,892	0.5	1,291,921	138.6	5,893	0.6	1,297,814	139.2	932,346
Fukushima	341,783	24.8	770,888	55.9	991,739	71.9	182,033	13.2	4,892	0.4	2,291,335	166.2	4,001	0.3	2,295,336	166.5	1,378,375
Ibaraki	432,834	71.0	478,140	78.4	199,804	32.8	90,896	14.9	645	0.1	1,202,319	197.2	1,354	0.2	1,203,673	197.4	609,693
Tochigi	413,349	64.5	286,021	44.6	348,904	54.4	133,444	20.8	5,281	0.8	1,186,999	185.2	2,683	0.4	1,189,682	185.6	640,828
Gunma	202,730	31.9	327,130	51.4	424,533	66.7	89,227	14.0	7,645	1.2	1,051,265	165.2	1,603	0.3	1,052,868	165.5	636,228
Saitama	276,162	72.7	168,546	44.4	121,260	31.9	125,335	33.0	519	0.1	691,822	182.2	524	0.1	692,346	182.3	379,775
Chiba	357,350	69.3	399,095	77.4	161,494	31.3	28,553	5.5	1,774	0.3	948,266	183.9	1,810	0.4	950,076	184.2	515,764
Tokyo	174,499	79.6	13,926	6.4	78,567	35.9	79,889	36.5	772	0.4	347,653	158.7	3,634	1.7	351,287	160.3	219,090
Kanagawa	199,753	82.7	50,762	21.0	90,931	37.6	55,293	22.9	11,235	4.7	407,974	168.9	412	0.2	408,386	169.0	241,605
Niigata	413,725	32.9	735,247	58.4	856,634	68.1	316,891	25.2	2,008	0.2	2,324,505	184.7	821	0.1	2,325,326	184.8	1,258,384
Toyama	173,083	40.7	152,378	35.9	287,915	67.8	125,847	29.6	865	0.2	740,088	174.2	3,004	0.7	743,092	174.9	424,761
Ishikawa	103,548	24.7	221,742	53.0	294,977	70.5	52,512	12.5	1,058	0.3	673,837	161.0	4,096	1.0	677,933	161.9	418,616
Fukui	97,894	23.4	90,146	21.5	315,466	75.3	62,065	14.8	253	0.1	565,824	135.0	1,967	0.5	567,791	135.5	419,043
Yamanashi	86,383	19.3	294,475	66.0	347,577	77.8	121,153	27.1	2,144	0.5	851,732	190.8	1,882	0.4	853,614	191.2	446,499
Nagano	357,753	26.4	463,584	34.2	1,058,819	78.1	278,833	20.6	790	0.1	2,159,779	159.2	12,717	0.9	2,172,496	160.2	1,356,223
Gifu	241,619	22.7	159,689	15.0	861,376	81.1	195,093	18.4	2,957	0.3	1,460,734	137.5	7,369	0.7	1,468,103	138.2	1,062,129
Shizuoka	346,960	44.6	447,631	57.5	491,421	63.2	84,045	10.8	6,301	0.8	1,376,358	176.9	10,432	1.3	1,386,790	178.2	778,060
Aichi	355,028	68.8	176,786	34.2	222,658	43.1	88,967	17.2	294	0.1	843,733	163.4	2,494	0.5	846,227	163.9	516,402
Mie	203,024	35.1	200,258	34.7	370,698	64.2	208,748	36.1	459	0.1	983,187	170.2	4,349	0.8	987,536	170.9	577,735
Shiga	193,352	48.1	108,518	27.0	197,672	49.2	149,371	37.2	0	0.0	648,913	161.5	4,276	1.1	653,189	162.6	401,736
Kyoto	188,553	40.9	141,889	30.8	325,919	70.7	25,737	5.6	221	0.0	682,319	147.9	5,125	1.1	687,444	149.0	461,220
Osaka	189,604	99.6	32,463	17.1	55,970	29.4	20,039	10.5	38	0.0	298,114	156.6	123	0.1	298,237	156.7	190,354
Hyogo	537,823	64.0	191,725	22.8	561,094	66.8	166,738	19.8	394	0.0	1,457,774	173.5	1,385	0.2	1,459,159	173.7	840,090
Nara	115,859	31.4	72,059	19.5	283,386	76.8	63,328	17.2	92	0.0	534,724	144.9	7,309	2.0	542,033	146.8	369,109
Wakayama	92,882	19.7	173,671	36.8	361,304	76.5	50,309	10.6	329	0.1	678,495	143.6	4,029	0.9	682,524	144.5	472,468
Tottori	71,413	20.4	171,162	48.8	250,564	71.4	49,485	14.1	203	0.1	542,827	154.8	545	0.2	543,372	154.9	350,710
Shimane	132,035	19.7	496,044	73.9	520,747	77.6	39,624	5.9	179	0.0	1,188,629	177.2	771	0.1	1,189,400	177.3	670,798
Okayama	219,777	30.9	529,078	74.4	488,222	68.6	81,503	11.5	200	0.0	1,318,780	185.4	4,480	0.6	1,323,260	186.0	711,462
Hiroshima	274,800	32.4	603,793	71.2	634,394	74.8	37,973	4.5	2,359	0.3	1,553,319	183.2	1,918	0.2	1,555,237	183.4	847,938
Yamaguchi	274,974	45.0	373,496	61.1	425,516	69.6	42,374	6.9	0	0.0	1,116,360	182.6	813	0.1	1,117,173	182.7	611,414
Tokushima	62,303	15.0	246,773	59.5	312,913	75.5	38,001	9.2	59	0.0	660,049	159.2	513	0.1	660,562	159.3	414,693
Kagawa	76,539	40.8	143,715	76.6	96,590	51.5	20,543	10.9	93	0.0	337,480	179.8	557	0.3	338,037	180.1	187,658
Ehime	132,778	23.4	348,513	61.4	404,923	71.3	39,891	7.0	1,947	0.3	928,052	163.5	2,758	0.5	930,810	164.0	567,610
Kochi	90,859	12.8	444,620	62.6	602,305	84.8	49,800	7.0	708	0.1	1,188,292	167.3	2,591	0.4	1,190,883	167.6	710,391
Fukuoka	292,071	58.6	240,437	48.2	225,088	45.1	88,790	17.8	135	0.0	846,521	169.8	3,032	0.6	849,553	170.4	498,640
Saga	1,144	46.9	1,634	67.0	1,153	47.2	284	11.6	2	0.1	4,218	172.8	26	1.1	4,245	173.9	2,441
Nagasaki	107,398	26.0	246,294	59.6	260,340	63.0	75,456	18.3	768	0.2	690,256	167.0	6,537	1.6	696,793	168.6	413,232
Kumamoto	129,855	17.9	490,154	67.4	527,156	72.5	164,074	22.6	332	0.0	1,311,571	180.5	5,997	0.8	1,317,568	181.3	726,793
Oita	103,865	16.4	412,316	65.0	451,758	71.2	174,646	27.5	15	0.0	1,142,600	180.2	6,988	1.1	1,149,588	181.3	634,061
Miyazaki	88,747	11.5	306,366	39.6	592,018	76.5	95,842	12.4	192	0.0	1,083,165	140.0	6,545	0.8	1,089,710	140.9	773,599
Kagoshima	205,128	22.3	563,712	61.3	593,232	64.6	89,390	9.7	1,874	0.2	1,453,336	158.2	8,828	1.0	1,462,164	159.1	918,899
Okinawa	110,644	48.6	133,651	58.7	113,604	49.9	47,050	20.7	1,038	0.5	405,987	178.3	1,870	0.8	407,857	179.1	227,672
Three metropolitan areas	2,839,274	52.8	1,607,198	29.9	3,133,353	58.3	1,057,720	19.7	18,755	0.3	8,656,300	161.1	34,534	0.6	8,690,834	161.7	5,373,273
(Former three major metropolitan areas)	2,481,796	63.0	1,375,450	34.9	1,988,591	50.4	799,299	20.3	15,706	0.4	6,660,842	169.0	19,856	0.5	6,680,698	169.5	3,942,035
Rural areas	7,274,729	23.0	15,454,730	48.8	22,119,034	69.8	4,379,959	13.8	86,441	0.3	49,314,894	155.7	218,228	0.7	49,533,123	156.4	31,667,709
(Former rural areas)	7,632,207	23.1	15,686,478	47.4	23,263,796	70.3	4,638,380	14.0	89,490	0.3	51,310,352	155.0	232,906	0.7	51,543,259	155.7	33,098,947

Notes:

- The figures of the right of each column show the shares to the prefecture's land area or national land area.
- The prefecture's land area is from data of prefectures. The land area of all Japan is the total of prefecture land area (the national land area and area of Hokkaido does not include Habomai, Shikotan, Kunashiri, Etorofu, areas of islands).
- The three metropolitan area are the total of Tokyo area (Saitama, Chiba, Tokyo and Kanagawa), Nagoya area (Aichi, Mie and Gifu), and Osaka area (Kyoto, Osaka, Hyogo and Nara).
- "Former three major metropolitan areas" excludes Gifu and Nara prefectures out of the Three metropolitan areas.

Source: Materials by Ministry of Land, Infrastructure, Transport and Tourism

3.03 Shares of Vegetation Categories by Region

(%)

	Hokkaido	Tohoku	Kanto	Chubu	Kinki	Chugoku	Shikoku	Kyushu	Okinawa	Nationwide
Arctic, alpine natural vegetation	0.8	0.1	0.1	0.5	0.0	0.0	0.0	0.0	0.0	0.3
Boreal,(the subarctic zone), natural vegetation	13.7	1.2	2.1	4.5	0.0	0.0	0.0	0.0	0.0	4.3
Buna, (fagus crenata) class of natural vegetation	33.0	12.3	3.3	9.4	1.2	0.6	1.5	1.1	0.0	12.0
Yabutsubaki, (camellia japonica) class of natural vegetation	0.0	0.9	0.5	0.3	1.7	0.8	2.1	7.4	42.3	1.6
Rivers, wetland, salt marsh, dune vegetation (common in each class)	1.1	0.6	0.9	0.3	0.5	0.2	0.3	0.6	5.6	0.7
Boreal,(the subarctic zone) compensated vegetation	1.0	0.1	0.1	0.5	0.0	0.0	0.1	0.0	0.0	0.3
Buna,(fagus crenata) compensated vegetation	9.0	21.6	6.7	21.5	4.0	5.9	1.7	1.2	0.0	11.4
Yabutsubaki (camellia japonica) compensated vegetation	0.0	10.3	12.3	11.4	31.2	50.9	30.4	20.1	8.5	15.5
Plantations cultivated vegetation (common in each class)	37.7	47.9	55.1	42.8	48.6	35.4	59.0	61.5	34.0	46.2
Others	3.6	5.0	18.8	8.8	12.8	6.2	5.0	8.2	9.7	7.6

Note:
As of March, 1999. "0.0%" means "0%".

Source: "Basic Survey of the Natural Environment 5th [vegetation survey]," Ministry of the Environment

3.04 Shares of Vegetation Naturalness by Region

(%)

Vegetation naturalness	Classification	Hokkaido	Tohoku	Kantou	Chubu	Kinki	Chugoku	Shikoku	Kyushu	Okinawa	Nationwide
10	Natural vegetation of grasslands and moorlands	2.2	0.9	1.1	0.9	0.5	0.2	0.3	0.5	5.6	1.1
9	Natural vegetation of forests	46.5	14.3	5.9	14.2	2.9	1.4	3.6	8.5	42.3	17.9
8	Substitutional communities close to natural vegetation in forest	2.5	5.4	1.9	7.1	5.4	2.6	9.8	11.2	1.2	5.3
7	Substitutional communities in secondary forest	3.3	22.8	15.2	23.7	28.8	48.3	21.5	6.9	0.0	18.6
6	Planted forests	17.0	26.3	22.7	24.0	30.9	16.9	41.8	36.5	1.1	24.8
5	Substitutional communities in high profile grasslands	2.7	1.0	0.9	1.3	0.4	0.7	0.5	2.5	7.2	1.5
4	Substitutional communities in low profile grasslands	1.9	2.8	1.5	1.5	1.2	5.4	0.7	1.3	0.4	2.1
3	Fruit orchards, mulberry plantations, tea gardens, and other horticultural area	0.3	1.7	2.8	1.9	2.1	1.3	4.0	3.8	2.0	1.8
2	Paddies, fields, and other arable land, residential area with abundant trees	20.9	20.7	33.8	18.6	16.5	19.2	14.2	23.4	30.8	21.1
1	Urban land, developed tracts, and other zone where plant life is virtually nonexistent	1.2	2.9	11.9	5.1	8.5	2.9	2.7	4.5	9.2	4.3
Naturally barren land		0.3	0.1	0.7	0.7	0.3	0.2	0.4	0.4	0.1	0.4
Open water areas		1.1	1.0	1.6	1.0	2.7	1.0	0.7	0.4	0.1	1.1
Other （areas bare of vegetation - category unknown）		0.0	0.0	0.0	0.0	0.0	0.0	0.0	0.1	0.0	0.0

Note:
As of March, 1999. "0.0%" means "0%".

Source: "Basic Survey of the Natural Environment 5th [vegetation survey]," Ministry of the Environment

3.05 Changes in Vegetation Naturalness over Time

Vegetation Naturalness	Classification	FY1973 (1st survey)		FY1988 (3rd survey)		FY1993 (4th survey)		FY1998 (5th survey)	
		Grid count	Ratio (%)	Grid count	Ratio (%)	Grid count	Ratio (%)	Grid count	Ratio (%)
10	Natural vegetation of grasslands and moorlands	3,862	1.1	4,038	1.1	4,011	1.1	3,993	1.1
9	Natural vegetation of forests	78,258	21.7	66,979	18.2	66,394	18.0	65,824	17.9
8	Substitutional communities close to natural vegetation in forest	16,075	4.5	20,046	5.4	19,733	5.4	19,598	5.3
7	Substitutional communities in secondary forest	75,521	21.0	70,710	19.2	69,256	18.8	68,540	18.6
6	Planted forests	75,140	20.9	90,803	24.6	91,846	24.9	91,414	24.8
5	Substitutional communities in high profile grasslands	7,019	1.9	5,737	1.6	5,626	1.5	5,568	1.5
4	Substitutional communities in low profile grasslands	5,857	1.6	5,939	1.6	6,498	1.8	7,591	2.1
3	Fruit orchards, mulberry plantations, tea gardens, and other horticultural area	5,509	1.5	6,798	1.8	6,817	1.8	6,788	1.8
2	Paddies, fields, and other arable land, residential area with abundant trees	81,815	22.7	76,945	20.9	77,311	21.0	77,695	21.1
1	Urban land, developed tracts, and other zone where plant life is virtually nonexistent	11,303	3.1	14,841	4.0	15,420	4.2	15,999	4.3
Naturally barren land		-	-	1,392	0.4	1,416	0.4	1,420	0.4
Open water areas		-	-	4,170	1.1	4,211	1.1	4,227	1.1
Other (areas bare of vegetation - category unknown)		-	-	72	0.0	71	0.0	70	0.0
Total		360,359	100.0	368,470	100.0	368,610	100.0	368,727	100.0

Source: "National Survey on the Natural Environment 1st, 3rd, 4th, & 5th [Vegetation Survey]," Ministry of the Environment

3.06 Areas of Forest and Grazing Land (by prefectures and type of ownership)

(Unit: ha) (As of Feb 1st ,2015)

Prefectures	Total area of forest	National Ownership			Private Ownership							
							Public domain					
		Total	Forestry Agency	Government Agency other than Forestry Agency	Total	Independent Administrative Institutions	Subtotal	Prefectures	Forest improvement corporations (afforestation corporations)	Municipalities	Property wards	Privately Owned
Nation-wide	24,802,277	7,175,516	7,037,076	138,440	17,626,761	692,554	3,370,380	1,271,571	391,189	1,406,063	301,557	13,563,827
Hokkaido	5,536,398	2,926,611	2,837,973	88,638	2,609,787	148,045	950,591	620,245	61	330,285	-	1,511,151
Aomori	628,191	381,514	378,825	2,689	246,677	13,558	43,339	15,359	-	14,882	13,098	189,780
Iwate	1,156,100	366,084	363,703	2,381	790,016	22,681	157,074	85,757	-	61,250	10,067	610,261
Miyagi	410,803	122,381	117,805	4,576	288,422	14,648	60,670	14,036	10,071	35,732	831	213,104
Akita	835,414	373,030	372,851	179	462,384	13,993	109,883	12,622	27,525	52,521	17,215	338,508
Yamagata	643,835	328,386	328,162	224	315,449	8,515	49,464	3,164	15,951	13,135	17,214	257,470
Fukushima	943,762	373,963	371,759	2,204	569,799	13,004	95,386	10,757	15,881	43,520	25,228	461,409
Ibaraki	190,029	43,484	43,385	99	146,545	722	5,313	1,975	149	2,653	536	140,510
Tochigi	341,343	118,757	118,594	163	222,586	7,383	22,741	13,172	11	4,629	4,929	192,462
Gunma	408,064	178,101	177,132	969	229,963	11,569	26,635	7,038	5,301	14,185	111	191,759
Saitama	121,311	11,831	11,559	272	109,480	6,342	18,884	9,626	3,405	5,853	-	84,254
Chiba	158,848	7,606	7,464	142	151,242	2,420	9,706	7,618	1	1,864	223	139,116
Tokyo	77,253	5,970	5,581	389	71,283	194	22,628	12,247	1,072	7,649	1,660	48,461
Kanagawa	93,821	10,026	9,397	629	83,795	1,052	32,297	25,145	-	2,932	4,220	50,446
Niigata	804,261	224,559	222,381	2,178	579,702	12,746	75,820	6,514	10,305	52,778	6,223	491,136
Toyama	240,479	60,844	59,889	955	179,635	13,969	38,918	14,055	9,291	11,764	3,808	126,748
Ishikawa	278,695	26,057	25,373	684	252,638	8,245	33,841	11,866	13,334	8,437	204	210,552
Fukui	310,193	36,894	36,419	475	273,299	15,483	38,783	26,520	-	11,311	952	219,033
Yamanashi	349,204	6,455	4,440	2,015	342,749	10,401	198,657	168,119	7,941	12,002	10,595	133,691
Nagano	1,031,536	329,794	329,774	20	701,742	31,053	195,608	18,887	17,839	113,294	45,588	475,081
Gifu	841,016	156,430	156,328	102	684,586	25,073	103,909	14,123	26,078	48,028	15,680	555,604
Shizuoka	495,653	85,338	82,254	3,084	410,315	15,732	44,619	6,663	-	22,320	15,636	349,964
Aichi	218,471	11,069	10,612	457	207,402	2,172	23,942	7,724	4,289	6,256	5,673	181,288
Mie	371,523	22,346	22,137	209	349,177	12,200	31,357	3,701	-	22,355	5,301	305,620
Shiga	203,699	19,272	17,048	2,224	184,427	1,329	41,236	6,013	25,443	3,016	6,764	141,862
Kyoto	342,640	7,168	6,070	1,098	335,472	20,143	28,353	4,902	5,637	6,844	10,970	286,976
Osaka	57,456	1,302	1,050	252	56,154	39	3,911	768	-	916	2,227	52,204
Hyogo	561,801	29,807	28,414	1,393	531,994	30,222	71,141	6,832	23,817	32,346	8,146	430,631
Nara	283,541	12,685	11,549	1,136	270,856	12,022	22,406	5,995	1,918	11,171	3,322	236,428
Wakayama	360,958	16,574	16,570	4	344,384	13,104	22,659	5,304	3,827	9,043	4,485	308,621
Tottori	258,782	29,983	29,681	302	228,799	15,589	42,682	5,838	15,399	8,911	12,534	170,528
Shimane	525,049	31,514	31,488	26	493,535	31,368	52,767	3,218	24,265	23,305	1,979	409,400
Okayama	489,561	37,350	35,104	2,246	452,211	9,073	82,592	6,803	24,622	38,518	12,649	360,546
Hiroshima	616,854	47,486	46,088	1,398	569,368	16,236	68,298	10,062	16,149	33,700	8,387	484,834
Yamaguchi	440,556	11,482	11,025	457	429,074	11,773	71,720	4,120	14,028	52,852	720	345,581
Tokushima	313,645	18,097	17,916	181	295,548	14,608	26,490	6,161	9,584	9,136	1,609	254,450
Kagawa	87,118	7,955	7,553	402	79,163	405	11,361	2,794	-	5,785	2,782	67,397
Ehime	400,297	38,792	38,695	97	361,505	8,042	35,247	6,904	-	20,677	7,666	318,216
Kochi	594,075	123,622	123,196	426	470,453	15,257	46,789	9,689	15,079	21,601	420	408,407
Fukuoka	222,499	25,333	24,038	1,295	197,166	3,489	25,247	6,827	-	14,402	4,018	168,430
Saga	110,507	15,271	15,206	65	95,236	3,674	13,131	3,030	-	10,101	-	78,431
Nagasaki	245,592	24,305	23,005	1,300	221,287	2,646	41,891	6,461	14,176	20,708	546	176,750
Kumamoto	461,322	63,100	61,340	1,760	398,222	14,268	62,032	11,691	9,004	35,456	5,881	321,922
Oita	454,180	50,421	44,714	5,707	403,759	15,702	37,162	15,747	-	20,035	1,380	350,895
Miyazaki	588,544	174,511	172,969	1,542	414,033	32,558	51,411	12,690	10,118	28,523	80	330,064
Kagoshima	586,202	150,341	149,150	1,191	435,861	9,717	73,472	7,235	9,618	56,619	-	352,672
Okinawa	111,196	31,615	31,410	205	79,581	90	48,317	5,554	-	42,763	-	31,174

Source: "2015 CENSUS OF AGRICULTURE AND FORESTRY IN JAPAN ," Ministry of Agriculture, Forestry and Fisheries

3.07 Area of forest used for public benefits by prefecture

（Unit： ha）

Year・Prefecture	Protection forest	Erosion control area	Natural parks	Historic site, Scenic spot and Natural monuments	Wildlife sanctuary	Protected forest	Forest recreation	Process-sharing forest reproduction	Forest owned in common	Use of leased areas
2014	6,849,944	69,425	2,188,783	117,200	1,248,406	967,686	387,332	121,164	1,210,945	74,758
2015	6,863,206	69,449	2,189,272	118,677	1,257,569	967,984	386,647	118,540	1,149,860	74,104
Hokkaido	2,857,101	1,815	611,521	39,140	175,546	361,836	180,856	7,378	28,246	14,379
Aomori	336,196	3,886	77,950	6,280	62,849	25,106	10,398	13,692	182,457	7,239
Iwate	332,496	1,336	46,640	2,731	58,873	43,607	11,058	15,405	114,162	6,447
Miyagi	114,310	257	79,758	203	60,633	14,270	3,795	3,024	28,871	1,290
Akita	365,831	3,838	98,083	3,695	62,191	38,803	15,198	5,769	240,903	2,611
Yamagata	341,621	3,814	116,973	1,222	91,600	79,559	15,067	4,443	209,197	2,376
Fukushima	280,378	3,918	110,772	3,006	69,134	102,362	11,587	10,462	167,992	4,311
Ibaraki	38,025	13	25,928	111	6,358	225	1,693	2,633	-	578
Tochigi	114,727	626	75,729	73	32,969	12,425	8,657	2,762	8,048	1,989
Gunma	138,335	49	55,156	672	21,336	12,230	15,139	4,295	20,088	3,033
Saitama	11,864	-	11,987	3	7,348	2,145	-	53	-	4
Chiba	6,793	-	1,480	445	3,167	175	227	1,011	-	55
Tokyo	2,622	1	6,417	396	6,471	5,584	955	82	-	512
Kanagawa	8,837	13	8,461	-	6,355	1,306	1,778	31	-	91
Niigata	260,134	412	188,992	5,745	103,270	62,555	12,469	602	102,231	2,364
Toyama	103,939	9,183	81,413	18,437	64,486	12,937	498	-	-	553
Ishikawa	33,823	335	18,566	1	22,183	9,740	1,487	2	-	90
Fukui	36,384	1,755	6,145	36	2,991	409	412	28	-	221
Yamanashi	3,477	2	123	24	796	31	1,171	9	-	23
Nagano	348,645	21,836	183,986	12,758	124,302	68,290	25,124	4,020	40,733	3,709
Gifu	173,329	6,610	59,003	-	34,112	21,198	9,007	535	69	1,245
Shizuoka	81,950	124	18,636	4,089	55,438	6,517	5,038	610	-	1,151
Aichi	10,399	1,983	7,797	55	1,668	14	3,211	251	-	140
Mie	20,777	3,041	8,084	565	11,732	1,438	81	82	-	102
Shiga	15,850	2,528	8,503	-	3,668	635	2,316	27	604	246
Kyoto	4,271	183	183	178	538	10	262	33	-	46
Osaka	908	182	871	-	707	-	878	4	-	51
Hyogo	20,235	1,162	13,400	79	3,222	766	2,909	219	60	576
Nara	11,003	-	4,468	64	1,875	1,239	164	396	-	51
Wakayama	14,910	17	3,251	24	4,768	1,105	665	806	-	127
Tottori	28,969	54	14,886	317	9,920	3,779	2,746	259	-	208
Shimane	26,447	76	2,737	123	2,483	296	1,677	246	-	165
Okayama	30,924	22	13,679	4,616	2,653	62	2,355	193	-	268
Hiroshima	43,291	64	9,165	2,442	7,343	1,443	4,385	633	508	536
Yamaguchi	7,248	2	2,532	51	2,130	263	1,417	19	-	28
Tokushima	16,188	-	6,498	355	4,909	495	4,144	29	-	57
Kagawa	6,279	-	1,615	416	832	-	1,441	1,438	56	100
Ehime	34,349	-	12,792	661	13,894	3,865	4,901	795	-	334
Kochi	113,772	9	14,635	110	10,609	1,827	6,596	4,332	-	334
Fukuoka	22,614	4	16,113	111	7,117	366	1,618	925	-	360
Saga	13,144	4	8,788	259	4,543	134	779	1,077	-	355
Nagasaki	20,557	18	12,781	2,305	8,878	1,516	204	614	84	218
Kumamoto	57,437	72	23,997	80	17,725	5,051	2,746	2,596	-	496
Oita	41,287	44	22,615	1,044	10,894	3,186	2,494	782	500	355
Miyazaki	159,834	65	50,781	164	29,644	12,843	2,640	13,781	842	1,557
Kagoshima	134,051	93	34,994	5,129	12,970	25,863	2,353	10,605	4,210	1,128
Okinawa	17,643	-	10,388	461	10,438	20,476	2,052	1,550	-	11,996

Note:

・Compiled using data for Wildlife sanctuary, Process-sharign forest reproduction, Forest owned in common and use of leased areas are as of March 31st each year, others are as of April 1st.

・If the forest area among each type is duplicated. it is recorded as such in each area without dividing.

Source: "Overview of the World Census of Agriculture and Forestry 2016," Ministry of Agriculture, Forestry and Fisheries, the Government of Japan

3.08 Number of Natural Parks and Visitors

(Unit : Thousand persons)

Year	National parks		Quasi-national parks		Prefectural natural parks		Total		Changes in # of visitors to the previous year
	Number of parks	Annual number of visitors	Number of parks	Annual number of visitors	Number of parks	Annual number of visitors	Number of parks	Annual number of visitors	
1950	-	21,795	-	-	-	-	-	21,795	-
1951	-	29,572	-	-	-	-	-	29,572	135.7
1952	-	35,870	-	-	-	-	-	35,870	121.3
1953	-	39,190	-	-	-	-	-	39,190	109.3
1954	-	41,951	-	-	-	-	-	41,951	107.0
1955	-	47,158	-	-	-	-	-	47,158	112.4
1956	-	58,564	-	-	-	-	-	58,564	124.2
1957	-	64,516	-	24,546	-	-	-	89,061	152.1
1958	-	68,504	-	43,250	-	-	-	111,754	125.5
1959	-	77,963	-	44,497	-	-	-	122,460	109.6
1960	19	90,163	20	51,531	-	-	-	141,694	115.7
1961	19	109,193	20	58,357	-	-	-	167,550	118.2
1962	20	124,490	19	68,263	-	-	-	192,753	115.0
1963	21	144,641	22	77,032	-	-	-	221,673	115.0
1964	23	163,819	24	89,756	-	-	-	253,575	114.4
1965	23	189,260	27	110,274	238	99,821	288	399,355	157.5
1966	23	202,119	27	127,927	261	134,163	311	464,209	116.2
1967	23	218,845	30	137,359	263	162,843	316	519,047	111.8
1968	23	250,671	36	163,344	274	156,653	333	570,668	109.9
1969	23	269,814	40	195,623	270	185,713	333	651,150	114.1
1970	23	284,574	44	217,611	279	200,584	346	702,769	107.9
1971	23	303,600	44	233,830	279	193,210	346	730,640	104.0
1972	26	318,690	46	261,610	286	200,010	358	780,310	106.8
1973	26	338,090	50	278,770	287	212,760	363	829,620	106.3
1974	27	337,450	50	281,770	290	220,000	367	839,220	101.2
1975	27	325,290	50	280,790	293	218,810	370	824,890	98.3
1976	27	320,610	50	272,670	290	220,220	367	813,500	98.6
1977	27	316,270	50	276,790	292	220,130	369	813,190	100.0
1978	27	317,700	51	270,890	291	228,430	369	817,020	100.5
1979	27	323,450	51	272,320	291	227,960	369	823,730	100.8
1980	27	310,820	51	268,120	293	220,640	371	799,580	97.1
1981	27	323,680	52	274,580	294	235,500	373	833,760	104.3
1982	27	323,130	54	273,500	294	230,940	375	827,570	99.3
1983	27	323,650	54	274,530	297	235,930	378	834,110	100.8
1984	27	342,490	54	286,920	298	243,310	379	872,720	104.6
1985	27	352,610	54	287,420	298	246,870	379	886,900	101.6
1986	27	362,520	54	289,070	298	255,580	379	907,170	102.3
1987	28	371,030	54	283,090	299	262,450	381	916,570	101.0
1988	28	375,460	54	282,500	300	264,540	382	922,500	100.6
1989	28	386,860	54	291,700	300	276,270	382	954,830	103.5
1990	28	407,150	55	306,710	299	283,930	382	997,790	104.5
1991	28	415,960	55	312,630	299	285,850	382	1,014,440	101.7
1992	28	413,020	55	320,280	301	286,040	384	1,019,340	100.5
1993	28	389,920	55	296,070	301	269,650	384	955,640	93.8
1994	28	408,280	55	308,210	301	283,380	384	999,870	104.6
1995	28	391,070	55	305,610	302	274,330	385	971,010	97.1
1996	28	395,740	55	311,880	304	276,940	387	984,560	101.4
1997	28	385,480	55	302,400	305	271,580	388	959,460	97.5
1998	28	381,020	55	301,030	306	264,660	389	946,710	98.7
1999	28	381,560	55	296,165	307	274,537	390	952,262	100.6
2000	28	366,363	55	296,766	307	273,644	390	936,773	98.4
2001	28	368,000	55	296,972	308	269,760	391	934,732	99.8
2002	28	369,547	55	296,250	308	270,182	391	935,979	100.1
2003	28	357,923	55	293,077	308	265,716	391	916,716	97.9
2004	28	351,350	55	290,645	309	266,123	392	908,118	99.1
2005	28	351,837	55	293,957	309	259,475	392	905,269	99.7
2006	28	352,769	55	288,882	309	264,017	392	905,668	100.0
2007	29	354,232	56	294,756	309	267,857	394	916,845	101.2
2008	29	345,763	56	291,703	309	257,332	394	894,798	97.6
2009	29	343,559	56	291,436	311	264,832	396	899,827	100.6
2010	29	340,872	56	284,644	312	261,328	397	886,844	98.6
2011	29	309,043	56	270,010	314	228,856	399	807,909	91.1
2012	30	332,988	56	273,671	315	237,215	401	843,874	104.5
2013	30	354,956	56	278,625	314	239,618	400	873,199	103.5
2014	31	352,180	56	277,730	314	242,426	401	872,336	99.9

Source: "Survey on the number of visitors to the natural parks 2014," Ministry of the Environment

3.09 Annual number of visitors in each national park (1)

(Unit: ten thousand persons)

Park \ Year	1971	1972	1973	1974	1975	1976	1977	1978	1979	1980	1981	1982	1983	1984
1 Rishiri-Rebun-Sarobetsu				114	(102) 116	(102) 119	(82) 97	(101) 98	(93) 91	(122) 111	(94) 104	(119) 124	(111) 137	(102) 140
2 Shiretoko	(210) 121	(85) 103	(126) 130	(101) 132	(87) 115	(107) 124	(99) 123	(101) 124	(102) 127	(124) 158	(156) 246	(112) 276	(61) 168	(103) 174
3 Akan	(134) 394	(125) 493	(112) 553	(95) 523	(99) 517	(103) 535	(96) 511	(103) 527	(106) 557	(98) 545	(95) 520	(100) 519	(101) 526	(102) 538
4 Kushiroshitsugen														
5 Daisetsuzan	(140) 445	(92) 408	(116) 474	(106) 505	(96) 483	(107) 517	(95) 492	(98) 481	(103) 497	(98) 488	(95) 466	(105) 490	(98) 481	(101) 488
6 Shikotsu-Toya	(111) 1,323	(91) 1,206	(98) 1,182	(124) 1,472	(86) 1,273	(105) 1,341	(77) 1,032	(104) 1,076	(106) 1,145	(101) 1,160	(98) 1,131	(103) 1,165	(102) 1,188	(109) 1,299
7 Towada Hachimantai	(112) 626	(109) 685	(115) 789	(85) 673	(91) 614	(95) 588	(106) 622	(105) 652	(102) 662	(120) 796	(98) 781	(113) 886	(97) 855	(106) 909
8 Rikuchukaigan	(115) 359	(92) 329	(165) 542	(107) 582	(108) 629	(93) 589	(111) 655	(103) 676	(123) 833	(82) 683	(114) 777	(104) 811	(98) 794	(128) 1,012
9 Bandai-Asahi	(98) 1,093	(106) 1,162	(115) 1,339	(109) 1,456	(88) 1,281	(99) 1,272	(88) 1,114	(102) 1,137	(101) 1,147	(91) 1,049	(109) 1,139	(102) 1,160	(95) 1,100	(103) 1,133
10 Nikko	(102) 1,773	(108) 1,919	(102) 1,968	(93) 1,837	(93) 1,716	(90) 1,560	(104) 1,625	(105) 1,705	(101) 1,719	(97) 1,672	(99) 1,654	(101) 1,686	(99) 1,666	(105) 1,744
11 Oze														
12 Jyoshin'etsukogen	(118) 2,440	(108) 2,632	(114) 3,005	(95) 2,872	(101) 2,899	(96) 2,798	(103) 2,893	(100) 2,889	(102) 2,956	(102) 3,008	(107) 3,234	(101) 3,255	(101) 3,289	(103) 3,391
13 Chichibu-Tama-Kai	(115) 756	(111) 839	(105) 882	(105) 923	(103) 948	(100) 956	(103) 984	(103) 1,016	(97) 989	(100) 988	(100) 988	(91) 904	(101) 914	(110) 1,001
14 Ogasawara		0	1	(118) 1	(77) 1	(80) 1	(125) 1	(120) 1	(125) 1	(107) 2	(68) 1	(200) 2	(105) 2	(96) 2
15 Fuji-Hakone-Izu	(105) 8,062	(104) 8,391	(103) 8,631	(95) 8,240	(98) 8,075	(99) 8,013	(101) 8,057	(102) 8,222	(101) 8,288	(100) 8,285	(103) 8,517	(99) 8,474	(101) 8,562	(108) 9,242
16 Chubusangaku	(117) 705	(107) 756	(105) 798	(88) 706	(98) 692	(98) 682	(114) 781	(104) 816	(95) 775	(102) 790	(101) 797	(101) 808	(103) 831	(100) 827
17 Hakusan	(141) 31	(148) 46	(117) 54	(137) 74	(101) 75	(93) 70	(176) 123	(100) 123	(84) 103	(87) 89	(98) 87	(114) 99	(101) 100	(116) 117
18 Minami Alps	(176) 67	(112) 75	(68) 51	(96) 49	(100) 48	(95) 46	(87) 40	(105) 42	(100) 42	(97) 41	(101) 42	(55) 23	(101) 24	(149) 35
19 Ise-Shima	(103) 915	(107) 979	(108) 1,251	(113) 1,414	(89) 1,259	(105) 1,328	(101) 1,344	(105) 1,410	(101) 1,431	(96) 1,374	(100) 1,374	(96) 1,314	(100) 1,313	(107) 1,399
20 Yoshino-Kumano	(111) 1,151	(97) 1,122	(104) 1,165	(107) 1,194	(91) 1,086	(100) 1,093	(92) 1,009	(80) 809	(98) 794	(96) 761	(104) 792	(97) 772	(97) 745	(103) 764
21 San'inkaigan	(109) 547	(116) 632	(107) 676	(109) 736	(96) 706	(99) 703	(102) 721	(107) 772	(90) 697	(89) 623	(111) 693	(98) 676	(96) 652	(102) 666
22 Setonaikai	(98) 4,595	(106) 4,878	(103) 5,052	(102) 5,151	(96) 4,942	(97) 4,796	(97) 4,659	(94) 4,381	(104) 4,555	(84) 3,841	(112) 4,296	(98) 4,191	(103) 4,306	(106) 4,543
23 Daisen-Oki	(114) 693	(118) 819	(106) 869	(92) 799	(94) 755	(103) 781	(102) 808	(109) 883	(117) 1,037	(90) 938	(98) 919	(104) 952	(89) 850	(105) 893
24 Ashizuri-Uwakai		151	(136) 206	(102) 211	(102) 215	(102) 220	(90) 198	(94) 186	(96) 178	(96) 171	(105) 179	(100) 179	(99) 177	(111) 197
25 Saikai	(116) 417	(110) 458	(66) 305	(92) 282	(128) 363	(87) 316	(112) 355	(104) 369	(82) 301	(101) 304	(109) 330	(97) 320	(105) 336	(102) 341
26 Unzen-Amakusa	(111) 930	(110) 1,024	(89) 913	(97) 883	(108) 958	(101) 976	(99) 972	(100) 972	(103) 1,006	(94) 941	(107) 1,007	(96) 970	(102) 990	(99) 975
27 Aso-Kuju	(98) 1,630	(86) 1,405	(101) 1,424	(97) 1,379	(98) 1,351	(98) 1,333	(88) 1,170	(100) 1,167	(99) 1,154	(92) 1,061	(106) 1,130	(99) 1,123	(109) 1,220	(103) 1,257
28 Kirishima-Yaku	(107) 1,287	(105) 1,354	(113) 1,539	(99) 1,532	(92) 1,402	(91) 1,288	(95) 1,225	(100) 1,221	(102) 1,242	(95) 1,184	(97) 1,149	(97) 1,117	(100) 1,121	(102) 1,146
29 Iriomote		3	(188) 6	(132) 8	(120) 10	(168) 17	(84) 14	(128) 18	(105) 18	(106) 20	(96) 19	(89) 17	(105) 18	(102) 18
(% vs. the previous year) Total	(107) 30,360	(105) 31,869	(106) 33,809	(100) 33,765	(96) 32,529	(99) 32,061	(99) 31,627	(100) 31,770	(102) 32,345	(96) 31,082	(104) 32,368	(100) 32,313	(100) 32,365	(106) 34,249

Note:
The figures above are rounded off at the digit of thousand, thus "Total" may not be tally with a sum of a column.

3.09 Annual number of visitors in each national park (2)

(Unit: ten thousand persons)

Park \ Year	1985	1986	1987	1988	1989	1990	1991	1992	1993	1994	1995	1996	1997	1998
1 Rishiri-Rebun-Sarobetsu	(102)	(102)	(110)	(126)	(111)	(107)	(100)	(101)	(94)	(92)	(111)	(106)	(56)	(98)
	143	146	160	201	223	238	238	240	225	208	231	245	139	136
2 Shiretoko	(104)	(108)	(107)	(95)	(106)	(107)	(106)	(100)	(98)	(107)	(90)	(100)	(105)	(103)
	180	195	209	198	209	223	237	237	233	249	224	225	235	242
3 Akan	(102)	(101)	(105)	(100)	(107)	(106)	(106)	(100)	(93)	(102)	(100)	(98)	(104)	(110)
	549	554	581	582	621	660	697	699	651	662	659	646	672	741
4 Kushiroshitsugen				(236)	(133)	(102)	(115)	(105)	(121)	(116)	(90)	(98)	(79)	(121)
			16	38	51	52	60	63	76	87	79	77	61	74
5 Daisetsuzan	(98)	(104)	(105)	(101)	(108)	(114)	(106)	(102)	(89)	(109)	(88)	(103)	(103)	(105)
	476	497	524	527	568	649	685	700	622	677	595	614	633	665
6 Shikotsu-Toya	(107)	(105)	(105)	(107)	(106)	(102)	(101)	(98)	(97)	(99)	(98)	(99)	(93)	(100)
	1,392	1,463	1,539	1,647	1,740	1,766	1,784	1,743	1,691	1,672	1,638	1,616	1,507	1,514
7 Towada Hachimantai	(103)	(107)	(99)	(92)	(112)	(98)	(106)	(105)	(94)	(109)	(91)	(100)	(89)	(96)
	938	1,003	997	917	1,023	1,006	1,067	1,118	1,049	1,147	1,041	1,040	922	885
8 Rikuchukaigan	(102)	(96)	(93)	(96)	(115)	(106)	(99)	(100)	(80)	(123)	(87)	(98)	(98)	(91)
	1,031	989	916	882	1,011	1,070	1,054	1,054	846	1,042	911	892	876	796
9 Bandai-Asahi	(100)	(100)	(101)	(101)	(111)	(101)	(98)	(98)	(94)	(130)	(96)	(98)	(96)	(90)
	1,137	1,132	1,146	1,154	1,275	1,291	1,262	1,237	1,157	1,501	1,445	1,419	1,359	1,229
10 Nikko	(106)	(106)	(106)	(98)	(113)	(110)	(103)	(101)	(99)	(99)	(99)	(99)	(93)	(93)
	1,849	1,967	2,091	2,045	2,301	2,525	2,601	2,640	2,606	2,592	2,575	2,559	2,385	2,227
11 Oze														
12 Jyoshin'etsukogen	(100)	(102)	(103)	(102)	(105)	(105)	(103)	(97)	(96)	(98)	(93)	(101)	(99)	(92)
	3,395	3,448	3,563	3,620	3,788	3,979	4,099	3,974	3,813	3,720	3,446	3,494	3,468	3,178
13 Chichibu-Tama-Kai	(99)	(101)	(103)	(110)	(100)	(105)	(107)	(101)	(102)	(100)	(115)	(93)	(98)	(104)
	993	999	1,025	1,131	1,128	1,190	1,276	1,290	1,314	1,308	1,506	1,405	1,380	1,439
14 Ogasawara	(95)	(96)	(90)	(139)	(92)	(113)	(100)	(100)	(100)	(83)	(79)	(100)	(80)	(131)
	2	2	2	3	2	3	3	3	3	2	2	2	2	2
15 Fuji-Hakone-Izu	(102)	(107)	(104)	(100)	(96)	(108)	(105)	(97)	(92)	(103)	(98)	(102)	(97)	(97)
	9,471	10,153	10,553	10,567	10,132	10,917	11,434	11,119	10,236	10,553	10,308	10,525	10,206	9,899
16 Chubusangaku	(109)	(109)	(103)	(104)	(110)	(108)	(103)	(99)	(95)	(93)	(117)	(104)	(96)	(98)
	897	975	1,003	1,039	1,147	1,236	1,269	1,259	1,202	1,122	1,309	1,362	1,313	1,293
17 Hakusan	(98)	(105)	(102)	(109)	(106)	(106)	(89)	(144)	(78)	(106)	(107)	(93)	(100)	(98)
	115	121	123	134	142	150	133	192	149	157	168	156	155	152
18 Minami Alps	(100)	(104)	(103)	(93)	(100)	(97)	(103)	(109)	(116)	(108)	(99)	(97)	(103)	(104)
	35	36	38	35	35	34	35	38	44	47	47	45	47	48
19 Ise-Shima	(99)	(99)	(97)	(93)	(106)	(109)	(97)	(97)	(111)	(130)	(73)	(97)	(94)	(90)
	1,389	1,374	1,335	1,248	1,322	1,444	1,398	1,361	1,508	1,954	1,417	1,378	1,295	1,166
20 Yoshino-Kumano	(100)	(105)	(101)	(92)	(104)	(105)	(105)	(105)	(95)	(101)	(104)	(103)	(101)	(92)
	763	798	802	735	761	798	835	876	830	836	873	896	903	835
21 San'inkaigan	(104)	(102)	(100)	(98)	(104)	(97)	(102)	(101)	(97)	(121)	(90)	(104)	(93)	(93)
	692	704	705	689	718	700	713	720	697	841	754	784	727	677
22 Setonaikai	(106)	(95)	(99)	(108)	(103)	(100)	(97)	(97)	(94)	(100)	(86)	(108)	(98)	(116)
	4,821	4,592	4,556	4,912	5,083	5,087	4,926	4,774	4,508	4,491	3,869	4,196	4,104	4,763
23 Daisen-Oki	(98)	(101)	(100)	(96)	(105)	(104)	(103)	(100)	(99)	(102)	(98)	(101)	(100)	(95)
	876	885	889	851	893	931	963	959	945	967	952	965	966	923
24 Ashizuri-Uwakai	(124)	(100)	(101)	(98)	(95)	(96)	(120)	(102)	(94)	(94)	(101)	(98)	(99)	(90)
	244	244	248	242	231	221	266	272	257	242	246	241	239	215
25 Saikai	(99)	(100)	(97)	(103)	(104)	(105)	(119)	(104)	(88)	(104)	(105)	(101)	(102)	(100)
	337	337	326	334	348	365	433	449	393	409	429	435	442	441
26 Unzen-Amakusa	(94)	(99)	(100)	(102)	(101)	(100)	(81)	(116)	(95)	(108)	(99)	(97)	(100)	(101)
	919	907	904	922	933	934	758	876	832	900	890	868	869	881
27 Aso-Kuju	(108)	(111)	(107)	(104)	(98)	(103)	(106)	(99)	(96)	(117)	(100)	(106)	(108)	(100)
	1,359	1,504	1,616	1,678	1,651	1,693	1,798	1,780	1,714	2,009	2,017	2,137	2,299	2,309
28 Kirishima-Yaku	(108)	(97)	(101)	(98)	(111)	(115)	(101)	(104)	(85)	(103)	(103)	(91)	(99)	(102)
	1,238	1,204	1,216	1,194	1,323	1,523	1,536	1,594	1,353	1,398	1,441	1,314	1,299	1,323
29 Iriomote	(111)	(113)	(89)	(110)	(120)	(107)	(124)	(106)	(100)	(91)	(109)	(99)	(126)	(107)
	20	23	20	22	27	29	36	38	38	34	37	37	47	50
(% vs. the previous year)	(103)	(103)	(102)	(101)	(103)	(105)	(102)	(99)	(94)	(105)	(96)	(101)	(97)	(99)
Total	35,261	36,252	37,103	37,546	38,686	40,715	41,596	41,302	38,992	40,828	39,107	39,574	38,548	38,102

Note:
The figures above are rounded off at the digit of thousand, thus "Total" may not be tally with a sum of a column.

3.09 Annual number of visitors in each national park (3)

(Unit: ten thousand persons)

Park \ Year		1999	2000	2001	2002	2003	2004	2005	2006	2007	2008	2009	2010	2011	2012	2013	2014
1	Rishiri-Rebun-Sarobetsu	(104)	(99)	(107)	(101)	(99)	(90)	(92)	(94)	(93)	(92)	(91)	(97)	(95)	(80)	(109)	(89)
		142	141	151	152	151	136	125	117	109	100	91	88	84	67	73	65
2	Shiretoko	(100)	(93)	(103)	(98)	(98)	(101)	(102)	(104)	(88)	(92)	(93)	(101)	(93)	(107)	(97)	(95)
		242	226	234	229	225	228	232	242	212	195	181	182	169	180	174	166
3	Akan	(106)	(88)	(105)	(95)	(94)	(94)	(99)	(78)	(89)	(95)	(93)	(99)	(94)	(104)	(98)	(102)
		786	693	725	691	652	614	606	471	420	400	373	369	347	360	353	360
4	Kushiroshitsugen	(86)	(88)	(94)	(89)	(100)	(96)	(107)	(81)	(97)	(92)	(91)	(106)	(118)	(115)	(101)	(100)
		64	56	53	47	47	45	48	39	38	35	32	34	40	46	46	46
5	Daisetsuzan	(95)	(99)	(99)	(101)	(101)	(96)	(101)	(99)	(90)	(91)	(95)	(97)	(90)	(108)	(107)	(102)
		630	624	620	627	636	610	619	610	549	501	478	466	420	455	487	499
6	Shikotsu-Toya	(100)	(70)	(120)	(106)	(99)	(87)	(127)	(98)	(98)	(77)	(93)	(97)	(86)	(108)	(110)	(103)
		1,507	1,055	1,271	1,343	1,333	1,155	1,462	1,439	1,414	1,084	1,003	969	835	901	990	1,024
7	Towada Hachimantai	(99)	(98)	(99)	(103)	(109)	(97)	(96)	(96)	(102)	(88)	(105)	(73)	(73)	(111)	(95)	(105)
		874	860	851	876	957	927	886	851	866	763	803	589	428	475	450	474
8	Rikuchukaigan	(105)	(101)	(92)	(99)	(90)	(109)	(93)	(97)	(102)	(94)	(106)	(58)	(11)	(311)	(157)	(112)
		836	847	780	774	697	762	705	682	699	659	699	407	46	143	225	252
9	Bandai-Asahi	(94)	(88)	(98)	(102)	(90)	(95)	(103)	(94)	(98)	(98)	(103)	(91)	(90)	(114)	(95)	(103)
		1,160	1,016	996	1,011	911	865	891	836	822	807	833	758	681	774	735	755
10	Nikko	(100)	(98)	(93)	(99)	(100)	(97)	(96)	(100)	(100)	(97)	(100)	(99)	(76)	(113)	(102)	(104)
		2,220	2,173	2,029	2,006	2,001	1,944	1,861	1,863	1,855	1,791	1,789	1,770	1,339	1,510	1,544	1,609
11	Oze										(172)	(152)	(172)	(121)	(114)	(107)	(81)
										※ 29	50	44	50	35	40	43	35
12	Jyoshin'etsukogen	(102)	(100)	(99)	(100)	(90)	(101)	(98)	(96)	(99)	(98)	(98)	(99)	(97)	(104)	(101)	(99)
		3,229	3,223	3,187	3,183	2,878	2,899	2,844	2,740	2,709	2,657	2,614	2,588	2,516	2,614	2,647	2,616
13	Chichibu-Tama-Kai	(109)	(100)	(100)	(101)	(93)	(101)	(113)	(101)	(91)	(106)	(93)	(94)	(90)	(112)	(97)	(91)
		1,571	1,567	1,569	1,589	1,470	1,482	1,682	1,700	1,553	1,639	1,519	1,430	1,287	1,440	1,396	1,268
14	Ogasawara	(143)	(90)	(111)	(67)	(100)	(100)	(100)	(100)	(150)	(67)	(100)	(100)	(200)	(100)	(98)	(75)
		3	3	3	2	2	2	2	2	3	2	2	2	4	4	4	3
15	Fuji-Hakone-Izu	(105)	(95)	(104)	(101)	(99)	(100)	(100)	(103)	(101)	(101)	(102)	(103)	(93)	(109)	(107)	(100)
		10,408	9,855	10,211	10,301	10,178	10,204	10,196	10,480	10,587	10,743	10,920	11,250	10,413	11,335	12,147	12,390
16	Chubusangaku	(97)	(101)	(93)	(101)	(94)	(91)	(97)	(103)	(99)	(98)	(95)	(99)	(94)	(104)	(102)	(92)
		1,252	1,263	1,177	1,187	1,110	1,012	980	1,006	1,000	977	929	917	863	897	917	848
17	Hakusan	(99)	(111)	(96)	(91)	(101)	(79)	(100)	(100)	(94)	(108)	(97)	(92)	(75)	(96)	(87)	(98)
		150	167	160	145	147	116	116	116	109	118	115	106	79	76	66	65
18	Minami Alps	(163)	(103)	(76)	(100)	(66)	(151)	(105)	(91)	(95)	(102)	(105)	(133)	(64)	(127)	(109)	(56)
		79	81	62	62	41	62	65	59	56	57	60	80	51	65	71	40
19	Ise-Shima	(93)	(100)	(99)	(95)	(101)	(99)	(103)	(110)	(90)	(78)	(99)	(103)	(91)	(99)	(143)	(83)
		1,081	1,076	1,067	1,018	1,024	1,017	1,046	1,150	1,032	803	793	820	748	744	1,063	887
20	Yoshino-Kumano	(113)	(91)	(97)	(100)	(96)	(107)	(104)	(97)	(100)	(94)	(95)	(105)	(76)	(110)	(105)	(106)
		945	863	838	835	798	854	892	861	865	814	773	812	618	679	710	752
21	San'inkaigan	(95)	(108)	(99)	(99)	(90)	(101)	(92)	(103)	(99)	(103)	(98)	(106)	(91)	(122)	(106)	(98)
		642	691	684	678	608	612	566	584	579	599	590	626	571	696	740	723
22	Setonaikai	(91)	(96)	(99)	(96)	(98)	(99)	(100)	(99)	(105)	(100)	(99)	(103)	(94)	(106)	(102)	(103)
		4,340	4,156	4,105	3,961	3,877	3,819	3,805	3,772	3,973	3,964	3,944	4,061	3,809	4,029	4,123	4,240
23	Daisen-Oki	(96)	(97)	(104)	(106)	(100)	(93)	(103)	(98)	(101)	(103)	(97)	(104)	(100)	(110)	(151)	(87)
		884	854	885	935	932	870	893	876	888	918	888	926	930	1,021	1,537	1,341
24	Ashizuri-Uwakai	(91)	(102)	(99)	(98)	(101)	(98)	(101)	(98)	(101)	(96)	(99)	(108)	(81)	(101)	(101)	(91)
		195	198	196	193	194	190	192	189	191	184	182	196	158	159	160	145
25	Saikai	(98)	(101)	(82)	(130)	(101)	(95)	(105)	(100)	(101)	(97)	(99)	(102)	(96)	(99)	(107)	(103)
		431	435	355	460	465	440	460	459	462	450	445	456	439	435	464	478
26	Unzen-Amakusa	(100)	(100)	(99)	(97)	(87)	(92)	(99)	(102)	(99)	(96)	(100)	(101)	(96)	(104)	(102)	(98)
		881	883	875	847	738	680	671	682	673	644	641	649	624	650	665	650
27	Aso-Kuju	(98)	(102)	(104)	(104)	(99)	(94)	(97)	(104)	(106)	(94)	(101)	(96)	(100)	(95)	(106)	(91)
		2,254	2,297	2,381	2,468	2,438	2,289	2,210	2,303	2,441	2,286	2,306	2,219	2,227	2,121	2,241	2,050
28	Kirishima-Kinkowan (Kirishima-Yaku)	(98)	(98)	(100)	(99)	(94)	(102)	(85)	(102)	(105)	(104)	(100)	(97)	(90)	(120)	(100)	(97)
		1,295	1,272	1,274	1,263	1,193	1,215	1,030	1,048	1,105	1,150	1,145	1,110	1,003	1,208	1,210	1,171
29	Yakushima (Island)															(95)	(94)
															18	17	16
30	Keramashoto																
																	20
31	Iriomote-Ishigaki	(110)	(118)	(94)	(120)	(125)	(93)	(113)	(105)	(184)	(101)	(87)	(96)	(89)	(113)	(126)	(114)
		55	65	61	73	91	85	96	101	186	188	164	157	140	158	199	227
(% vs. the previous year)		(100)	(96)	(100)	(100)	(97)	(98)	(100)	(100)	(100)	(98)	(99)	(99)	(91)	(108)	(107)	(99)
Total		38,156	36,636	36,800	36,955	35,792	35,135	35,184	35,278	35,425	34,578	34,356	34,087	30,904	33,299	35,495	35,218

Notes:

- Data for "Oze" show the number of visitors to Oze national park after it was designated as national park in August, 2007.
- Data for "Yakushima" show the number of visitors to Yakushima national park after it was designated as national park in March, 2012.
- Data for “Keramashoto” show the number of visitors to Keramashoto national park after it was designated as national park in March, 2014.
- The total value in this table does not match the apparent sum of this table (million people) because it is a value obtained by rounding off the total of 1,000 people unit according to Table II-3.

Source: "Survey on the number of visitors to the natural parks 2014," Ministry of the Environment

3.10 Annual number of visitors to each quasi-national park (1)

(Unit: ten thousand persons)

Park \ Year	1971	1972	1973	1974	1975	1976	1977	1978	1979	1980	1981	1982
1 Shokanbetsu-Teuri-Yagishiri												
2 Abashiri	229	314	432	466	430	439	414	409	383	392	393	452
3 Niseko-Shakotan-Otarukaigan	322	325	343	376	383	394	384	385	401	416	392	408
4 Hidakasanmyaku-Erimo											102	115
5 Onuma	220	174	189	243	242	268	243	277	305	324	305	275
6 Shimokitahanto	97	107	120	121	109	103	107	113	119	112	110	116
7 Tsugaru					206	202	206	215	218	207	202	210
8 Hayachine												28
9 Kurikoma	252	248	252	258	289	273	271	281	331	287	253	286
10 Minamisanriku-Kinkazan									311	203	224	206
11 Zao	755	786	845	789	818	725	731	742	632	683	735	775
12 Oga			258	232	223	194	176	200	204	200	184	192
13 Chokai	145	171	209	194	217	171	266	239	227	221	263	255
14 Echigosanzan-Tadami			127	110	134	107	112	107	111	91	90	98
15 Suigo-Tsukuba	752	734	782	799	725	690	701	647	720	724	673	735
16 Myougi-Arafune-Sakukogen	113	128	143	120	114	101	89	74	117	118	122	127
17 Minamiboso	1,637	1,644	1,743	1,627	1,603	1,659	1,635	1,850	1,750	1,607	1,909	1,772
18 Meiji Memorial Forest Takao	133	155	176	191	202	161	172	176	184	203	197	180
19 Tanzawa-Oyama	151	253	255	214	237	226	231	242	300	317	326	342
20 Sado-Yahiko-Yoneyama	528	664	592	525	605	653	585	643	510	535	592	584
21 Notohanto	493	529	606	658	673	620	674	730	726	713	751	718
22 Echizen-Kagakaigan	651	760	865	910	760	718	725	854	700	828	797	785
23 Wakasawan	1,023	1,062	1,043	1,078	946	927	903	941	926	919	896	879
24 Yatsugatake-Chushinkogen	1,085	1,170	1,316	1,379	1,343	1,332	1,354	1,429	1,444	1,409	1,546	1,516
25 Tenryu-Okumikawa	325	297	348	357	274	298	309	383	397	386	400	373
26 Ibi-Sekigahara-Yoro	118	132	143	151	152	153	151	168	169	164	179	183
27 Hida-Kisogawa	829	890	912	975	792	832	795	880	867	844	840	869
28 Aichikogen	352	375	386	371	514	571	597	717	708	740	527	537
29 Mikawawan	2,131	2,145	2,338	2,097	1,982	1,929	1,998	2,033	2,033	2,001	1,999	1,883
30 Suzuka	325	260	389	404	410	408	447	411	420	427	520	461
31 Muroo-Akame-Aoyama	173	196	215	251	159	182	188	174	182	177	199	187
32 Biwako	3,661	4,002	3,789	3,820	3,982	3,930	3,979	2,733	2,496	2,445	2,470	2,467
33 Tango-Amanohashidate-Oeyama												
34 Meiji Memorial Forest Minoo	156	150	151	155	279	202	216	215	220	237	215	231
35 Kongo-Ikoma-Kisen	1,935	2,151	2,505	2,734	2,501	2,135	2,123	1,910	1,935	1,982	1,938	1,907
36 Hyonosen-Ushiroyama-Nagisan	153	184	212	232	231	238	236	207	240	200	208	203
37 Yamato-Aogaki	360	375	468	475	493	540	546	575	563	561	521	537
38 Koya-Ryujin	148	165	148	139	134	128	122	130	128	185	173	193
39 Hiba-Dogo-Taishaku	88	62	72	84	78	106	101	103	97	98	88	95
40 Nishichugokusanchi	94	91	100	86	52	65	59	78	79	84	87	94
41 Kitanagatokaigan	302	253	384	291	270	258	250	232	278	257	247	248
42 Akiyoshidai	236	323	358	403	358	292	321	309	262	240	222	221
43 Tsurugisan	95	107	102	24	133	159	173	188	186	169	178	154
44 Muroto-Anankaigan	166	181	177	143	279	291	288	315	288	243	255	226
45 Ishizuchi	105	100	121	124	126	146	153	118	125	130	138	146
46 Kitakyusyu		724	455	457	453	475	476	509	524	509	524	517
47 Genkai	1,369	1,824	1,589	1,550	1,580	1,466	1,448	1,467	1,561	1,504	1,777	1,803
48 Yaba-Hita-Hikosan	553	698	682	687	562	581	642	664	653	633	663	693
49 Iki-Tsushima	78	91	93	76	74	73	102	107	111	103	115	107
50 Kyushuchuosanchi												17
51 Nippokaigan				146	196	210	188	161	176	188	179	166
52 Sobo-Katamuki	65	99	112	110	98	110	118	119	127	118	124	104
53 Nichinankaigan	784	785	909	967	926	906	859	769	779	735	715	684
54 Amamigunto				61	60	69	183	173	171	165	142	138
55 Okinawakaigan		118	197	273	364	306	344	378	413	427	467	464
56 Okinawasenseki		77	128	240	308	246	282	314	345	351	390	388
Rishiri Rebun	59	82	90	(in 1974, registered as Rishiri-Rebun-Sarobetsu National Park)								
Ashizuri	137			(in 1972, registered as Ashizuri-Uwakai National Park)								
(% vs. the previous year)	(107)	(112)	(107)	(101)	(100)	(97)	(102)	(98)	(101)	(98)	(102)	(100)
Total	23,383	26,161	27,877	28,177	28,079	27,267	27,679	27,089	27,232	26,812	27,458	27,350

Note:
The figures shown above are rounded to the ten thousands and the sums may not match "Total" figures due to rounding errors.

3.10 Annual number of visitors to each quasi-national park (2)

(Unit: ten thousand persons)

Park \ Year	1983	1984	1985	1986	1987	1988	1989	1990	1991	1992	1993	1994
1 Shokanbetsu-Teuri-Yagishiri								※ 27	68	61	59	62
2 Abashiri	417	430	425	424	441	446	468	517	524	489	462	459
3 Niseko-Shakotan-Otaru Kaigan	407	420	433	428	432	512	567	597	622	621	577	625
4 Hidaka Sanmyaku-Erimo	109	124	122	124	119	152	118	123	117	109	108	111
5 Onuma	250	230	213	211	241	263	271	284	303	303	281	290
6 Shimokitahanto	115	119	125	135	134	127	132	129	129	122	116	119
7 Tsugaru	176	188	204	222	215	222	223	234	250	251	245	275
8 Hayachine	25	22	19	20	17	18	19	19	19	21	18	22
9 Kurikoma	293	292	322	352	335	342	372	389	402	411	386	372
10 Minami Sanriku Kinkazan	226	267	290	253	240	236	279	288	282	282	235	310
11 Zao	791	866	874	884	848	904	1,004	998	1,013	1,006	946	967
12 Oga	153	182	192	200	191	195	205	254	215	199	204	211
13 Chokai	259	288	290	280	298	316	335	349	299	329	283	373
14 Echigo Sanzan Tadami	90	90	101	98	99	87	97	97	99	104	103	106
15 Suigo Tsukuba	735	823	794	835	810	869	882	1,009	1,381	2,062	1,882	1,748
16 Myougi Arafune Saku Kogen	121	125	128	139	145	130	144	157	155	155	172	171
17 Minamiboso	1,773	1,914	1,810	1,753	1,674	1,605	1,769	1,846	1,828	1,801	1,593	1,715
18 Meiji no Mori Takao	177	163	159	160	150	165	176	188	152	156	184	184
19 Tanzawa Oyama	377	402	360	370	373	382	401	416	450	451	417	416
20 Sado Yahiko Yoneyama	584	683	774	823	795	790	798	840	852	877	737	799
21 Notohanto	719	753	734	738	740	752	834	865	943	926	817	863
22 Echizen Kagakaigan	803	816	822	832	806	817	826	887	885	876	827	834
23 Wakasawan	957	1,008	1,031	1,032	1,011	1,021	1,078	1,136	1,123	1,084	959	1,087
24 Yatsugatake Chushin Kogen	1,579	1,691	1,687	1,759	1,782	1,912	1,833	1,915	1,930	1,870	1,696	1,804
25 Tenryuu Oku Mikawa	393	418	420	448	464	497	543	579	664	642	584	622
26 Ibi Sekigahara Yourou	175	171	173	174	175	168	168	174	172	174	164	182
27 Hida Kisogawa	685	697	728	715	701	630	617	667	648	637	611	603
28 Aichi Kogen	593	629	618	631	624	577	609	622	668	723	724	679
29 Mikawa wan	1,904	1,970	1,963	1,959	1,960	1,920	1,906	1,930	1,922	1,796	1,691	1,699
30 Suzuka	502	438	488	425	428	412	416	430	417	421	389	386
31 Muro Akame Aoyama	207	213	223	220	232	226	231	223	225	231	228	235
32 Biwako	2,563	2,660	2,723	2,711	2,527	2,553	2,484	2,707	2,596	2,717	2,685	2,725
33 Tango Amanohashidate Oeyama												
34 Meiji no Mori Minoo	189	233	230	225	223	221	211	226	229	230	230	235
35 Kongo Ikoma Kisen	1,760	1,790	1,793	1,799	1,710	1,674	1,617	1,669	1,711	1,785	1,793	1,849
36 Hyonosen Ushiroyama Nagisan	241	250	255	218	239	203	216	291	315	335	336	366
37 Yamato Aogaki	540	579	571	585	546	538	565	562	577	577	562	546
38 Koya Ryujin	204	280	215	228	227	229	254	283	269	295	291	304
39 Hiba Dogo Taishaku	95	120	123	130	115	107	109	103	118	114	105	106
40 Nishi chugoku sanchi	96	99	104	117	106	93	100	124	132	118	108	114
41 Kita Nagato Kaigan	251	239	236	261	265	245	272	279	279	261	241	248
42 Akiyoshidai	259	270	248	248	233	243	259	271	258	231	229	218
43 Tsurugi san	181	169	180	214	181	179	166	162	166	186	127	166
44 Muroto Anan kaigan	247	253	254	260	252	245	243	248	248	246	220	241
45 Ishizuchi	94	95	91	89	89	88	86	89	99	119	112	122
46 Kita Kyuusyuu	508	524	523	527	526	255	295	322	377	362	327	390
47 Genkai	1,876	1,848	1,835	1,834	1,771	1,800	1,910	1,934	2,028	2,166	1,822	2,064
48 Yaba Hita Hikosan	654	662	692	711	727	736	753	774	726	710	721	727
49 Iki Tsushima	109	109	110	119	129	135	140	162	159	166	171	174
50 Kyushu Chuo Sanchi	37	65	53	72	63	63	62	64	61	61	54	58
51 Nippo kaigan	179	184	186	197	191	196	216	237	222	224	149	168
52 Sobokatamuki	104	115	124	119	114	126	131	142	146	152	123	137
53 Nichinan kaigan	671	664	665	612	581	581	671	703	641	609	322	343
54 Amami gunto	138	127	128	115	107	116	116	112	122	121	124	135
55 Okinawa kaigan	460	477	479	474	492	504	526	549	554	564	567	567
56 Okinawa senseki	384	400	402	398	416	427	449	472	477	487	490	490
(% vs. the previous year)	100	(105)	(100)	(101)	(98)	(100)	(103)	(105)	(102)	(102)	(92)	(104)
Total	27,435	28,692	28,742	28,907	28,309	28,250	29,170	30,671	31,263	32,028	29,607	30,821

Note:
- The figures shown above are rounded to the ten thousands and the sums may not match "Total" figures due to rounding errors.
- Data for "1 Shokanbetsu-Teuri-Yagishiri" show the number of visitors to it after it was designated as a quasi-national park in August, 1990.

3.10 Annual number of visitors to each quasi-national park (3)

(Unit: ten thousand persons)

Park \ Year	1995	1996	1997	1998	1999	2000	2001	2002	2003	2004	2005	2006	2007
1 Shokanbetsu-Teuri-Yagishiri	62	57	55	54	54	52	51	49	46	44	39	36	31
2 Abashiri	451	433	414	345	348	313	319	305	289	267	227	253	234
3 Niseko-Shakotan-Otarukaigan	624	622	760	704	715	691	648	617	512	518	491	453	449
4 Hidakasanmyaku-Erimo	109	112	102	92	87	69	66	62	54	51	49	47	50
5 Onuma	297	288	240	242	223	207	234	233	201	192	174	185	176
6 Shimokitahanto	122	128	127	138	140	139	141	143	166	154	140	136	141
7 Tsugaru	272	284	296	297	295	303	317	309	334	317	323	309	307
8 Hayachine	20	21	24	20	18	16	14	13	13	13	12	12	12
9 Kurikoma	356	318	334	314	318	305	310	300	290	298	305	256	262
10 Minamisanriku-Kinkazan	285	298	293	294	305	302	281	273	235	283	262	216	219
11 Zao	929	909	830	820	777	730	704	692	638	643	651	631	631
12 Oga	200	200	233	215	214	204	197	187	191	244	222	208	218
13 Chokai	320	348	337	300	296	293	280	239	232	234	221	221	222
14 Echigosanzan-Tadami	113	111	96	101	103	99	91	93	10	48	57	61	62
15 Suigo-Tsukuba	1,784	1,839	1,851	1,776	1,689	1,699	1,751	1,885	1,956	1,691	1,799	1,741	1,762
16 Myougi-Arafune-Sakukogen	172	172	158	165	171	171	187	161	179	170	169	171	150
17 Minamiboso	1,651	1,590	1,592	1,734	1,685	1,658	1,643	1,526	1,445	1,259	1,274	1,239	1,278
18 Meiji Memorial Forest Takao	152	135	115	107	135	143	169	217	216	234	240	259	264
19 Tanzawa-Oyama	419	375	372	322	307	262	309	301	290	277	263	249	267
20 Sado-Yahiko-Yoneyama	784	772	773	666	714	753	750	705	729	700	724	697	659
21 Notohanto	760	756	664	678	634	625	632	732	676	620	582	567	483
22 Echizen-Kagakaigan	812	799	691	672	667	686	678	677	636	951	1,151	585	577
23 Wakasawan	1,046	1,015	967	1,003	976	955	939	946	1,006	1,002	1,036	1,112	1,009
24 Yatsugatake-Chushinkogen	1,738	1,712	1,674	1,567	1,594	1,701	1,773	2,020	1,969	1,894	1,967	1,911	1,972
25 Tenryu-Okumikawa	605	637	619	580	567	543	537	536	495	487	486	510	503
26 Ibi-Sekigahara-Yoro	197	207	190	167	170	186	175	170	181	190	187	185	179
27 Hida-Kisogawa	600	580	545	492	505	494	461	388	379	380	423	418	801
28 Aichikogen	687	785	714	687	661	663	682	665	624	568	572	548	553
29 Mikawawan	1,776	1,688	1,608	1,553	1,505	1,487	1,360	1,245	1,151	1,171	1,093	1,088	1,090
30 Suzuka	439	459	483	462	445	445	439	445	441	442	453	441	440
31 Muroo-Akame-Aoyama	341	360	354	308	328	312	311	266	278	279	280	278	271
32 Biwako	2,738	3,168	2,871	2,945	2,968	2,947	3,021	3,046	2,930	2,965	2,942	3,200	3,244
33 Tango-Amanohashidate-Oeyama													※※165
34 Meiji Memorial Forest Minoo	223	215	215	231	237	255	257	252	262	257	259	256	254
35 Kongo-Ikoma-Kisen	1,812	1,906	1,824	1,826	1,800	1,902	1,915	1,867	1,878	1,900	1,907	1,873	1,880
36 Hyonosen-Ushiroyama-Nagisan	398	347	332	336	343	331	337	340	326	330	330	313	330
37 Yamato-Aogaki	507	545	532	767	727	757	740	675	683	680	726	728	731
38 Koya-Ryujin	287	293	281	260	253	253	253	240	255	294	270	367	263
39 Hiba-Dogo-Taishaku	110	105	90	88	83	120	89	84	85	82	80	79	76
40 Nishichugokusanchi	136	144	120	103	101	74	117	112	121	96	102	98	83
41 Kitanagatokaigan	231	245	238	241	230	230	260	253	258	233	236	244	249
42 Akiyoshidai	187	189	165	150	148	135	146	143	125	126	118	119	131
43 Tsurugisan	175	188	184	243	190	207	207	182	179	165	168	159	159
44 Muroto-Anankaigan	245	237	232	257	228	235	227	107	96	96	88	90	103
45 Ishizuchi	125	132	110	105	88	110	81	83	71	56	61	57	58
46 Kitakyusyu	372	411	392	413	345	341	363	331	452	421	412	435	448
47 Genkai	2,028	2,135	2,168	2,208	2,143	2,172	2,193	2,257	2,470	2,465	2,473	2,453	2,498
48 Yaba-Hita-Hikosan	753	776	835	858	883	921	920	1,037	1,034	1,045	1,039	1,074	1,099
49 Iki-Tsushima	181	167	151	157	133	137	125	136	129	126	128	123	152
50 Kyushuchuosanchi	52	64	55	62	57	60	61	59	60	54	49	49	52
51 Nippokaigan	173	171	178	198	190	183	161	164	153	182	234	241	243
52 Sobo-Katamuki	133	138	127	133	125	130	143	154	150	144	144	145	161
53 Nichinankaigan	371	428	374	350	332	310	299	328	304	292	271	261	287
54 Amamigunto	130	74	94	89	88	90	76	59	68	65	68	56	55
55 Okinawakaigan	575	589	622	642	677	674	667	699	719	725	750	763	782
56 Okinawasenseki	498	512	545	565	600	597	590	622	642	648	673	686	705
(% vs. the previous year)	(99)	(102)	(97)	(100)	(98)	(100)	(100)	(100)	(99)	(99)	(101)	(98)	(102)
Total	30,561	31,188	30,240	30,103	29,616	29,677	29,697	29,625	29,308	29,065	29,396	28,892	29,480

Note:

・The figures shown above are rounded to the ten thousands and the sums may not match "Total" figures due to rounding errors.

・Data for "33 Tango-Amanohashidate-Oeyama" show the number of visitors to it after it was designated as a quasi-national park in August, 2007.

3.10 Annual number of visitors to each quasi-national park (4)

(Unit: ten thousand persons)

Park \ Year	2008	2009	2010	2011	2012	2013	2014	% vs. previous year ※
1 Shokanbetsu-Teuri-Yagishiri	26	26	22	22	22	22	21	95
2 Abashiri	195	180	185	152	177	167	164	98
3 Niseko-Shakotan-Otarukaigan	419	421	402	394	394	435	430	99
4 Hidakasanmyaku-Erimo	43	42	43	38	38	39	38	97
5 Onuma	161	140	132	110	124	140	139	99
6 Shimokitahanto	126	127	76	60	62	67	79	118
7 Tsugaru	283	283	278	229	237	229	210	92
8 Hayachine	11	11	5	3	4	4	4	100
9 Kurikoma	101	91	133	76	81	78	77	99
10 Minamisanriku-Kinkazan	218	223	227	73	110	105	80	76
11 Zao	575	605	569	456	523	530	540	102
12 Oga	195	204	189	161	189	197	182	92
13 Chokai	218	209	210	191	196	181	187	103
14 Echigosanzan-Tadami	59	56	55	36	44	49	42	86
15 Suigo-Tsukuba	1,679	1,665	1,790	1,522	1,722	1,711	1,720	101
16 Myougi-Arafune-Sakukogen	148	143	148	126	122	126	130	103
17 Minamiboso	1,234	1,302	1,311	1,011	1,020	1,151	1,102	96
18 Meiji Memorial Forest Takao	368	404	387	495	272	222	360	162
19 Tanzawa-Oyama	275	285	225	191	212	273	272	100
20 Sado-Yahiko-Yoneyama	703	689	659	666	672	646	618	96
21 Notohanto	518	499	522	552	522	512	462	90
22 Echizen-Kagakaigan	600	660	643	477	468	444	448	101
23 Wakasawan	828	829	816	761	772	815	930	114
24 Yatsugatake-Chushinkogen	1,820	1,753	1,688	1,666	1,749	1,819	1,745	96
25 Tenryu-Okumikawa	493	532	555	468	513	516	503	97
26 Ibi-Sekigahara-Yoro	172	168	184	196	178	169	157	93
27 Hida-Kisogawa	772	779	767	686	703	678	633	93
28 Aichikogen	547	553	507	510	536	451	453	100
29 Mikawawan	1,156	1,211	1,005	915	945	960	843	88
30 Suzuka	362	370	373	361	355	440	408	93
31 Muroo-Akame-Aoyama	270	284	204	190	205	202	199	99
32 Biwako	3,227	3,191	3,011	3,415	3,178	3,129	3,255	104
33 Tango-Amanohashidate-Oeyama	406	403	430	414	399	427	416	97
34 Meiji Memorial Forest Minoo	266	243	182	173	170	171	184	108
35 Kongo-Ikoma-Kisen	1,905	1,950	1,814	1,710	1,680	1,680	1,635	97
36 Hyonosen-Ushiroyama-Nagisan	334	325	336	337	356	363	357	98
37 Yamato-Aogaki	735	738	749	732	730	736	725	99
38 Koya-Ryujin	251	238	271	217	236	251	255	102
39 Hiba-Dogo-Taishaku	74	70	68	66	60	68	69	101
40 Nishichugokusanchi	94	88	86	84	84	84	87	104
41 Kitanagatokaigan	241	218	216	214	203	205	220	107
42 Akiyoshidai	127	128	118	112	111	104	94	90
43 Tsurugisan	213	177	164	139	137	153	132	86
44 Muroto-Anankaigan	104	128	160	153	145	161	140	87
45 Ishizuchi	57	59	56	57	62	55	48	87
46 Kitakyusyu	455	439	434	468	468	479	471	98
47 Genkai	2,540	2,505	2,483	2,563	2,610	2,605	2,652	102
48 Yaba-Hita-Hikosan	1,016	1,037	1,040	930	943	1,003	1,007	100
49 Iki-Tsushima	153	126	137	133	188	214	214	100
50 Kyushuchuosanchi	54	58	50	47	59	60	59	98
51 Nippokaigan	284	280	270	307	299	329	307	93
52 Sobo-Katamuki	184	182	178	157	160	167	165	99
53 Nichinankaigan	309	311	372	323	356	380	348	92
54 Amamigunto	54	59	45	44	48	50	49	98
55 Okinawakaigan	796	765	781	746	780	826	877	106
56 Okinawasenseki	719	688	704	669	738	784	836	107
(% vs. the previous year)	(99)	(100)	(97)	(95)	(101)	(102)	(100)	
Total	29,173	29,150	28,465	27,004	27,367	27,862	27,773	

Note:

・The figures shown above are rounded to the ten thousands and the sums may not match "Total" figures due to rounding errors.

・Year-over-year rate is calculated by dividing the number of visitors in 2013 by that in 2012.

Source: "Survey on the number of visitors to the natural parks 2014," Ministry of the Environment

3.11 Number of Applications for Permission for Activities in National Parks (Numbers of Approvals by the Ministry of the Environment)

(Unit: Number of cases)

	Constructing, renovating and extending structures		Felling trees and bamboos		Mining of minerals, extracting soil and stones		Reclaiming the surface of water		Causing changes in water volume/level		Collecting alpine plants		Capturing animals		Others		Total	
FY1994	511	(60)	21	(10)	261	(56)	13	(0)	1	(0)	65	(59)	24	(24)	41	(20)	937	(229)
1995	519	(62)	24	(12)	253	(54)	2	(0)	1	(0)	74	(62)	34	(34)	35	(22)	942	(246)
1996	534	(73)	25	(14)	185	(65)	12	(0)	2	(0)	76	(69)	32	(32)	26	(18)	892	(271)
1997	494	(70)	19	(10)	226	(53)	5	(0)	2	(0)	61	(60)	35	(35)	37	(23)	879	(251)
1998	505	(75)	24	(11)	186	(45)	7	(0)	5	(2)	51	(45)	36	(36)	44	(36)	858	(250)
1999	556	(92)	53	(32)	213	(57)	2	(0)	10	(1)	59	(48)	34	(34)	34	(24)	961	(288)
2000	1,188	(78)	50	(14)	261	(51)	4	(0)	7	(0)	103	(84)	47	(47)	219	(41)	1,879	(315)
2001	1,246	(107)	64	(26)	252	(54)	1	(0)	2	(1)	61	(51)	43	(43)	253	(69)	1,922	(351)
2002	1,107	(146)	61	(15)	240	(47)	1	(0)	3	(1)	96	(76)	46	(46)	253	(76)	1,807	(407)
2003	1,185	(130)	92	(27)	239	(51)	1	(0)	4	(1)	120	(90)	51	(51)	310	(95)	2,002	(445)
2004	1,287	(134)	150	(94)	262	(52)	1	(0)	7	(2)	115	(96)	52	(51)	259	(35)	2,133	(464)
2005	1,468	(168)	82	(28)	283	(65)	4	(0)	3	(2)	154	(128)	71	(69)	345	(113)	2,410	(573)
2006	1,429	(157)	118	(13)	282	(64)	3	(0)	3	(1)	101	(73)	64	(64)	327	(102)	2,327	(474)
2007	1,411	(131)	78	(21)	313	(67)	0	(0)	1	(0)	109	(79)	41	(36)	280	(84)	2,233	(418)
2008	1,595	(193)	110	(37)	337	(96)	3	(0)	4	(1)	144	(120)	58	(51)	354	(113)	2,605	(611)
2009	1,746	(235)	113	(31)	323	(75)	0	(0)	4	(1)	158	(120)	78	(64)	374	(145)	2,796	(671)
2010	1,850	(226)	128	(36)	280	(81)	0	(0)	3	(1)	172	(139)	71	(64)	408	(114)	2,912	(661)
2011	1,803	(195)	126	(26)	273	(69)	0	(0)	11	(1)	139	(112)	58	(52)	392	(116)	2,802	(571)
2012	1,903	(191)	154	(30)	303	(76)	1	(0)	5	(1)	165	(124)	70	(67)	454	(132)	3,055	(621)
2013	1,825	(164)	150	(35)	338	(58)	0	(0)	6	(1)	137	(100)	56	(50)	372	(111)	2,884	(519)
2014	1,936	(194)	160	(31)	335	(67)	0	(0)	7	(4)	135	(98)	68	(59)	418	(113)	3,059	(566)
2015	1,931	(228)	176	(35)	321	(67)	0	(0)	6	(1)	152	(125)	76	(73)	450	(136)	3,112	(665)

Notes:
- "Others" includes "Changing the feature of land" etc.
- The figures in ( ) are the number of cases related to the Special Protection Zones, and included in the total.
- The figures also include cases for the national agencies to be involved.

Source: Ministry of the Environment

3.12 Area of Natural Parks by Region

(As of March 31 2017)

Type	Number of parks	Area of parks	Percentage of total land area of Japan	Breakdown					
				Special Zones				Ordinary Zones	
				Area	Ratio	Special Protection Zones		Area	Ratio
						Area	Ratio		
		(ha)	(%)	(ha)	(%)	(ha)	(%)	(ha)	(%)
National park	34	2,189,804	5.8	1,599,812	73.1	287,938	13.1	589,992	26.9
Quasi-national park	56	1,409,727	3.7	1,307,601	92.8	65,021	4.6	102,126	7.2
Prefectural natural park	311	1,967,323	5.2	713,756	36.3	—	0.0	1,253,567	63.7
Total	401	5,566,854	14.7	3,621,169	65.0	352,959	6.3	1,945,685	35.0

Note:
The total land area of Japan is 37,797,201 ha ("Municipalities Area Statistics of Japan, 2015" by Geospatial Information Authority of Japan).

Source: Materials by Ministry of the Environment

3.13 Area of Natural Parks by Prefecture

As of March 31st 2017
(Unit: ha)

Prefecture	Total land area (A)	Area of natural parks (B)								Percentage of total land area of prefecture (B) / (A)
		National parks		Quasi-national parks		Prefectural natural parks		Total		
		Number	Areas	Number	Areas	Number	Areas	Number	Areas	
Hokkaido	8,342,430	6	508,308	5	212,359	12	146,873	23	867,540	10.40
Aomori	964,559	2	43,170	2	44,607	7	26,410	11	114,187	11.84
Iwate	1,527,500	2	29,206	2	20,038	7	22,817	11	72,061	4.72
Miyagi	728,222	1	14,882	2	50,273	8	106,044	11	171,199	23.51
Akita	1,163,750	1	26,813	3	46,765	8	50,223	12	123,801	10.64
Yamagata	932,315	1	71,115	3	42,255	6	42,139	10	155,509	16.68
Fukushima	1,378,370	3	90,108	1	33,665	11	55,323	15	179,096	12.99
Ibaraki	609,706	0	0	1	31,801	9	59,095	10	90,896	14.91
Tochigi	640,809	2	104,781	0	0	8	28,662	10	133,443	20.82
Gunma	636,228	3	80,801	1	8,063	0	0	4	88,864	13.97
Saitama	379,775	1	34,411	0	0	10	90,171	11	124,582	32.80
Chiba	515,765	0	0	2	8,845	8	19,692	10	28,537	5.53
Tokyo	219,093	3	69,426	1	777	6	9,686	10	79,889	36.46
Kanagawa	241,583	1	10,356	1	27,572	4	17,210	6	55,138	22.82
Niigata	1,258,410	5	106,383	2	81,928	13	128,580	20	316,891	25.18
Toyama	424,761	2	79,173	1	1,005	6	45,376	9	125,554	29.56
Ishikawa	418,609	1	25,735	2	10,453	5	16,376	8	52,564	12.56
Fukui	419,049	1	7,406	2	23,467	1	31,039	4	61,912	14.77
Yamanashi	446,527	3	101,862	1	4,088	2	15,203	6	121,153	27.13
Nagano	1,356,160	5	170,743	3	46,755	6	61,050	14	278,548	20.54
Gifu	1,062,130	2	38,236	2	34,632	15	122,225	19	195,093	18.37
Shizuoka	777,742	2	50,080	1	4,835	4	29,126	7	84,041	10.81
Aichi	517,248	0	0	4	49,817	7	39,064	11	88,881	17.18
Mie	577,440	2	72,526	2	26,272	5	103,098	9	201,896	34.96
Shiga	401,738	0	0	2	113,071	3	36,886	5	149,957	37.33
Kyoto	461,219	1	1,206	4	93,255	3	128	8	94,589	20.51
Osaka	190,514	0	0	2	16,498	2	3,541	4	20,039	10.52
Hyogo	840,096	2	19,458	1	25,200	11	121,357	14	166,015	19.76
Nara	369,094	1	31,313	4	28,522	3	3,493	8	63,328	17.16
Wakayama	472,469	2	13,111	2	16,746	11	19,694	15	49,551	10.49
Tottori	350,705	2	17,299	2	10,016	3	21,746	7	49,061	13.99
Shimane	670,824	1	13,036	2	10,848	11	16,612	14	40,496	6.04
Okayama	711,450	2	11,497	1	15,024	7	54,143	10	80,664	11.34
Hiroshima	847,945	1	10,685	2	20,731	6	6,441	9	37,857	4.46
Yamaguchi	611,230	1	6,214	3	20,839	4	15,918	8	42,971	7.03
Tokushima	414,665	1	1,538	2	21,921	6	15,247	9	38,706	9.33
Kagawa	187,672	1	18,171	0	0	1	2,363	2	20,534	10.94
Ehime	567,611	2	14,117	1	7,820	7	19,184	10	41,121	7.24
Kochi	710,393	1	6,041	3	8,133	18	33,330	22	47,504	6.69
Fukuoka	498,640	1	46	3	22,246	5	65,809	9	88,101	17.67
Saga	244,068	0	0	1	3,924	6	22,960	7	26,884	11.01
Nagasaki	413,209	2	37,504	2	12,304	6	24,283	10	74,091	17.93
Kumamoto	740,935	2	68,342	2	16,597	7	70,697	11	155,636	21.01
Oita	634,071	2	21,243	3	89,307	5	63,841	10	174,391	27.50
Miyazaki	773,531	1	13,006	4	31,968	6	46,945	11	91,919	11.88
Kagoshima	918,694	4	91,774	2	6,486	8	25,189	14	123,449	13.44
Okinawa	228,112	3	57,795	2	7,999	4	12,034	9	77,828	34.12
Total by prefecture	37,797,101	82	2,188,917	94	1,409,727	311	1,967,323	487	5,565,967	14.73
Total by park	37,797,101	34	2,189,804	56	1,409,727	311	1,967,323	401	5,566,854	14.55

Notes:
- Area of Natural Parks by prefecture constitutes a resurveyed value and may not match the total area by parks.
- The prefectural areas are based on the approximate values, listed on "Municipalities Area Statistics of Japan, 2014" by Geospatial Information Authority of Japan.
- Due to rounding off, the sum of prefectural land areas, and "total by prefecture" or "Total by park" may not foot.

Source: Materials by Ministry of the Environment

3.14 Marine Parks located in the National Parks and the Quasi-National Parks (1)

As of March 31, 2017

National park	Marine park areas	Location	Designated on	Number of parks	Area（ha）
Sanriku Fukko (reconstruction)	Kesennuma	Kesennuma, Miyagi	Jan22, 1971	3	23.4
Ogasawara	Hyotanjima	Ogasawara-mura, Tokyo	Nov12, 2009	1	24.0
	Hitomarujima	Ogasawara-mura, Tokyo	Nov12, 2009	1	16.7
	Anijima	Ogasawara-mura, Tokyo	Nov12, 2009	1	26.9
	Chichijima Miyanohama, Tsurihama	Ogasawara-mura, Tokyo	Nov12, 2009	1	38.9
	Chichijima Seihyokaigan	Ogasawara-mura, Tokyo	Nov12, 2009	1	2.9
	Chichijima Tatsumiwan (Chukaigan)	Ogasawara-mura, Tokyo	Nov12, 2009	1	2.0
	Chichijima Tatsumiwan (Kujirazaki)	Ogasawara-mura, Tokyo	Nov12, 2009	1	6.1
	Chichijima Tatsumiwan (Nishikaigan)	Ogasawara-mura, Tokyo	Nov12, 2009	1	6.3
	Minamijima	Ogasawara-mura, Tokyo	Nov12, 2009	1	245.3
	Hahajima Yashihama	Ogasawara-mura, Tokyo	Nov12, 2009	1	85.2
	Hahajima Uentoro	Ogasawara-mura, Tokyo	Nov12, 2009	1	157.1
	Hahajima Miyukinohama	Ogasawara-mura, Tokyo	Nov12, 2009	1	41.3
	Mukoujima Higashikaigan	Ogasawara-mura, Tokyo	Nov12, 2009	1	47.5
	Hirashima	Ogasawara-mura, Tokyo	Nov12, 2009	1	79.2
Fuji-Hakone-Izu	Miyakejima	Miyake-mura, Tokyo	Nov07, 1994	2	51.6
Yoshino-Kumano	Kumanonada Nigishima	Kumano, Mie	Dec19, 1975	2	14.4
	Kushimoto Undersea Park	Kushimoto-cho, Higashimuro-gun, Wakayama	Jul01, 1970	5	50.4
	Minabe	Minabe-cho, Hidaka-gun, Wakayama	Sep24, 2015	1	663.8
	Shogase	Minabe-cho, Hidaka-gun, Wakayama	Sep24, 2015	1	28.2
	Tanabe-Shirahama	Tanabe-shi & Shirahama-cho, Nishimuro-gun, Wakayama	Sep24, 2015	1	1,676.7
	Karekinada-Shirahama/Hiki	Shirahama-cho, Nishimuro-gun, Wakayama	Sep24, 2015	1	1,422.1
	Karekinada-Susami	Shirahama-cho & Susami-cho, Nishimuro-gun, Wakayama	Sep24, 2015	1	1,072.3
	Kushimoto	Kushimoto-cho, Higashimuro-gun, Wakayama	Sep24, 2015	1	2,683.8
	Myogashima	Kushimoto-cho, Higashimuro-gun, Wakayama	Sep24, 2015	1	5.9
	Kumanonada-Koza/Arafune	Kushimoto-cho & Nachi Katsuura-cho, Higashimuro-gun, Wakayama	Sep24, 2015	1	1,195.5
	Kumanonada-Urakami/Tamanoura	Nachi Katsuura-cho, Higashimuro-gun, Wakayama	Sep24, 2015	1	259.7
	Kumanonada-Katsuura/Taiji	Nachi Katsuura-cho & Taiji-cho, Higashimuro-gun, Wakayama	Sep24, 2015	1	1,390.5
	Kumanonada-Ohjigahama/Miwasaki	Shingu-Shi, Wakayama	Sep24, 2015	1	600.5
San'inkaigan	Goshikihama	Kyotango, Kyoto	Apr06, 1990	1	31.3
	Toyooka	Toyooka, Hyogo	Jan22, 1971	1	17.8
	Takeno	Toyooka, Hyogo	Jan22, 1971	1	18.8
	Hamasaka	Shinonsen-cho, Mikata-gun, Hyogo	Jan22, 1971	2	37.6
	Uradomekaigan	Iwami-cho, Iwami-gun, Shimane	Jan22, 1971	1	40.8
	San'inkaigan (the eastern part)	Kyotango, Kyoto Toyooka, Hyogo Kami-cho, Mikata-gun, Hyogo	Mar31, 2014	1	5,005.8
	San'inkaigan (the central part)	Kami-cho, Mikata-gun, Hyogo Shinonsen-cho, Mikata-gun, Hyogo Iwami-cho, Iwami-gun, Shimane	Mar31, 2014	1	3,872.9
	San'inkaigan (the western part)	Tottori, Tottori Iwami-cho, Iwami-gun, Shimane	Mar31, 2014	1	1,078.4
Setonaikai	Ushigakubi	Suouooshima-cho, Ooshima-gun, Yamaguchi	Feb28, 2013	1	20.3
	Jikamuro	Suouooshima-cho, Ooshima-gun, Yamaguchi	Feb28, 2013	1	13.0
	Isaki	Suouooshima-cho, Ooshima-gun, Yamaguchi	Feb28, 2013	1	18.6
	Okikamuro	Suouooshima-cho, Ooshima-gun, Yamaguchi	Feb28, 2013	1	4.5
Daisen-Oki	Shimanehanto	Izumo, Shimane	Oct16, 1972	1	7.0
	Jodogaura	Okinoshima-cho, Oki-gun, Shimane	Dec11, 1975	2	20.8
	Shiro	Okinoshima-cho, Oki-gun, Shimane	Dec11, 1975	1	14.8
	Kuniga	Nishinoshima-cho, Oki-gun, Shimane	Dec11, 1975	1	7.3
	Ama	Ama-cho, Oki-gun, Shimane	Sep18, 1997	1	7.6
Ashizuri-Uwakai	Uwakai	Ainan-cho, Minamiuwa-gun, Ehime	Nov10, 1972	9	58.2
	Okinoshima	Sukumo, Kochi	Nov10, 1972	5	36.3
	Tatsukushi	Tosashimizu, Kochi	Nov10, 1972	4	49.1
	Kashinishi	Ootsuki-cho, Hata-gun, Kochi	Nov10, 1972	2	16.8
	Tsutomezaki	Ootsuki-cho, Hata-gun, Kochi	Aug21, 1995	1	8.3
	Shirigai	Ootsuki-cho, Hata-gun, Kochi	Aug21, 1995	1	10.4
Saikai	Fukue	Goto, Nagasaki	Oct16, 1972	2	11.2
	Wakamatsu	Shinkamigotou-cho, Minamimatsuura-gun, Nagasaki	Oct16, 1972	3	19.2
Unzen-Amakusa	Tomioka	Reihoku-cho, Amakusa-gun, Kumamoto	Jul01, 1970	2	16.2
	Amakusa	Amakusa, Kumamoto	Jul01, 1970	1	5.1
	Ushibukashi	Amakusa, Kumamoto	Jul01, 1970	9	94.4

3.14 Marine Parks located in the National Parks and the Quasi-National Parks (2)

As of March 31, 2017

National park	Marine park areas	Location	Designated on	Number of parks	Area（ha)
Kirishima-Kinkowan	Sakurajima	Kagoshima, Kagoshima	Jul01, 1970	2	60.7
	Satamisaki	Minamioosumi, Kimotsuki-gun, Kagoshima	Jul01, 1970	2	11.8
	Kanze	Kagoshima, Kagoshima	Mar16, 2012	1	83.0
	Kamitsukurishima	Kirishima, Kagoshima	Mar16, 2012	1	103.6
	Wakamikonohana	Kirishima, Kagoshima	Mar16, 2012	1	19.7
	Wakamikokaizan	Kirishima, Kagoshima	Mar16, 2012	1	170.7
	Shigetomi Higata	Aira, Kagoshima-ken	Mar16, 2012	1	38.2
Yakushima	Kurio	Yaku-cho, Kumage-gun, Kagoshima	Mar16, 2012	3	114.4
	Megasaki	Yaku-cho, Kumage-gun, Kagoshima	Mar16, 2012	1	56.5
Amami Gunto	Kasari hanto higasi kaigan	Amami Kagoshima	Mar7,2017	1	65.0
	Surikozaki	Amami Kagosihma	Mar7,2017	1	79.0
	Oshima kaikyo	Setouchi-cho, Ohshima-gun, Kagoshima	Mar7,2017	3	69.0
	Yoronjima Syoko	Yoron-cyo Ohshima-gun Kagoshima	Mar7,2017	1	746.0
	Yoron Kaigan	Yoron-cyo Ohshima-gun Kagoshima	Mar7,2017	3	165.0
Keramashoto	Keramashoto	Tokashiki-son, Shimajiri-gun, Okinawa Zamami-son, Shimajiri-gun, Okinawa	Mar05, 2014	1	8,290.0
Iriomote-Ishigaki	Hirano	Ishigaki, Okinawa	Mar27, 2012	1	938.0
	Hirakubo	Ishigaki, Okinawa	Aug01, 2007	1	176.9
	Akaishi	Ishigaki, Okinawa	Mar27, 2012	1	861.6
	Tamatorizaki	Ishigaki, Okinawa	Mar27, 2012	1	903.0
	Kabira Ishizaki	Ishigaki, Okinawa	Aug01, 2007	1	274.8
	Yonehara Pukapii	Ishigaki, Okinawa	Mar27, 2012	1	147.4
	Yonehara	Ishigaki, Okinawa	Aug01, 2007	1	129.7
	Uganzaki	Ishigaki, Okinawa	Mar27, 2012	1	291.9
	Shiraho	Ishigaki, Okinawa	Aug01, 2007	1	311.6
	Hatomajima Barasu Unarizaki	Taketomi-cho, Yaeyama-gun, Okinawa	Mar27, 2012	1	1,419.1
	Taketomi Takidonguchi Sekiseishoko Hokusho Yonara Suidou	Taketomi-cho, Yaeyama-gun, Okinawa	Jul01, 1977	1	3,281.9
	Iriomotejima Shiiragawa kakou	Taketomi-cho, Yaeyama-gun, Okinawa	Mar27, 2012	1	369.0
	Taketomijima Shimobishi	Taketomi-cho, Yaeyama-gun, Okinawa	Jul01, 1977	1	221.0
	Taketomijima Minamiokishou	Taketomi-cho, Yaeyama-gun, Okinawa	Mar27, 2012	1	424.2
	Iriomotejima Kanokawa Nakanose	Taketomi-cho, Yaeyama-gun, Okinawa	Mar27, 2012	1	380.6
	Iriomotejima Nakamazaki	Taketomi-cho, Yaeyama-gun, Okinawa	Mar27, 2012	1	193.6
	Kuroshima Urabishi Kyanguchi Nakamoto-kaigan	Taketomi-cho, Yaeyama-gun, Okinawa	Jul01, 1977	1	2,403.2
	Aragusukujima Maibishi	Taketomi-cho, Yaeyama-gun, Okinawa	Jul01, 1977	1	179.7
	Haterumajima Nuubizakioki	Taketomi-cho, Yaeyama-gun, Okinawa	Mar27, 2012	1	1,721.7
	Haterumajima Hamasakioki	Taketomi-cho, Yaeyama-gun, Okinawa	Mar27, 2012	1	712.9
	Iriomotejima Ohmijya	Taketomi-cho, Yaeyama-gun, Okinawa	Apr15, 2016	1	103.0
	Iriomotejima Yutsun	Taketomi-cho, Yaeyama-gun, Okinawa	Apr15, 2016	1	87.2
	Sotopanarijima	Taketomi-cho, Yaeyama-gun, Okinawa	Apr15, 2016	1	391.0
Total 15 National Parks	Total 95 marine park areas			141	48,456.3

Quasi-national park	Marine park areas	Location	Designated on	Number of parks	Area (ha)
Niseko-Shakotan-Otarukaigan	Shakotan Hanto	Shakotan-cho, Shakotan-gun, Hokkaidou	Oct16, 1972	3	28.9
	Otarukaigan	Otaru, Hokkaido	Oct16, 1972	3	14.7
Shimokitahanto	Hotokegaura	Sai-mura, Shimokita-gun, Aomori	Dec11, 1975	1	5.7
	Taijima	Mutsu, Aomori	Dec11, 1975	1	3.6
Minamiboso	Katsuura	Katsuura-shi, Chiba	Jun07, 1974	1	14.5
Sado-Yahiko-Yoneyama	Sotokaifu	Sado, Niigata	Jan22, 1971	2	10.0
	Aikawa	Sado, Niigata	Jan22, 1971	2	6.0
	Ogi	Sado, Niigata	Jan22, 1971	1	5.0
Notohanto	Kinoura	Suzu, Ishikawa	Jan22, 1971	2	6.3
	Uchiura	Noto-cho, Housu-gun, Ishikawa	Jan22, 1971	3	32.0
Echizen-kagakaigan	Kagakaigan（hashitate kurosaki and katano）	Kaga, Ishikawa	Mar27, 2012	1	613.0
Wakasawan	Mikata	Wakasa-cho, Mikata kaminaka-gun, Fukui	Jan22, 1971	4	30.2
KitaNagatokaigan	Susawan	Hagi, Yamaguchi	Sep18, 1997	1	33.0
Muroto-Anankaigan	Awa Oshima	Mugi-cho, Kaifu-gun, Tokushima	Jan22, 1971	3	15.5
	Awa Takegashima	Kaiyo-cho, Kaifu-gun, Tokushima	Oct16, 1972	2	9.9
Genkai	Genkai	Karatsu, Saga	Jul01, 1970	5	45.5

3.14 Marine Parks located in the National Parks and the Quasi-National Parks (3)

As of March 31, 2017

National park	Marine park areas	Location	Designated on	Number of parks	Area（ha)
Iki-Tsushima	Iki Tatsunoshima	Iki, Nagasaki	Jun16, 1978	1	8.6
	Iki Tanagashima	Iki, Nagasaki	Jun16, 1978	1	9.7
	Iki Tsumagashima	Iki, Nagasaki	Jun16, 1978	1	9.3
	Tsushima Asowan	Tsushima, Nagasaki	Jun16, 1978	1	9.5
	Tsushima Kanzaki	Tsushima, Nagasaki	Jun16, 1978	1	10.4
Nippokaigan	Kamae	Saiki, Oita	Feb15, 1974	4	33.5
	Minami kitaura	Nobeoka, Miyazaki	Feb15, 1974	6	48.7
Nichinankaigan	Nichinan	Nango-cho, Minaminaka-gun /Nichinan /Kushima, Miyazaki	Jul01, 1970	6	55.9
Koshikishima	West Coast of Kamikoshikishima and Nagame Beach	Satsumasendai, Kagoshima	Mar16, 2015	1	1,668.6
	attached islands (Nojima, Chikajima, etc)	Satsumasendai, Kagoshima	Mar16, 2015	1	1,608.8
	Kashima cliff	Satsumasendai, Kagoshima	Mar16, 2015	1	917.6
	West Coast of Shimokoshikishima	Satsumasendai, Kagoshima	Mar16, 2015	1	2,564.7
Okinawakaigan	Okinawakaigan	Onna-son, Kunigami-gun, Nago, Okinawa	May15, 1972	1	126.0
Total 15 parks	Total 29 marine park areas			61	7,945.1

Source: Materials by Ministry of the Environment

3.15 Area of Wilderness Areas, Nature Conservation Areas (1)

Summary table of designated nature conservation areas

Type	Designated areas		Special zones				Marine special zones		Remarks
					Wildlife protection zones				
	Number	Area (ha)	Number	Area (ha)	Number	Area (ha)	Number	Area (ha)	
Wilderness Area	5	5,631.00							Designated by the state Only Minami-Iwoto Island is a restricted area
Nature Conservation Area	10	22,542.00	9	17,266.00	7	14,868.00	1	1077.00	Designated by the state
Prefectural Nature Conservation Area*	546	77,413.78	337	25,481.92	116	2,825.70			
Total	561	105,586.78	346	42,747.92	123	17,693.70	1	1077.00	

Note:
*Based on reports from prefectures as of March 31, 2017.

Wilderness areas

Region	Locations	Area (ha)	Land ownership	Designated date	Features of the natural environment	Remarks
Onnebetsudake	Shari-cho, Shari-gun, Hokkaido Rausu-cho, Menashi-gun, Hokkaido	1,895	National land (national forest)	February 4, 1980	Alpine vegetation mainly comprising stone pine	
Head of River Tokachi	Shintoku-cho, Kamikawa-gun, Hokkaido	1,035	〃	December 28, 1977	Subarctic coniferous forest mainly comprising Picea and Abies.	
Minami Iwoto	Ogasawara-mura, Tokyo	367	〃	May 17, 1975	Transition zone of tropical and subtropical vegetation	Restricted area (Designated on June 2, 1958)
Head of River Oi	Kawanehoncho, Haibara-gun, Shizuoka	1,115	〃	March 22, 1976	Temperate deciduous broad-leaved forest, Subarctic coniferous forest mainly comprising Northern Japanese Hemlock	
Yakushima	Yakushima-cho, Kumage-gun, Kagoshima	1,219	〃	May 17, 1975	Temperate coniferous forest mainly comprising cedar, Laurel forest mainly comprising quercus salicina	
Total	Five regions	5,631				

Nature conservation areas

Region	Locations	Area (ha)	Land ownership	Designated date	Features of the natural environment	Remarks
Ohirayama	Shimamaki-mura, Shimamaki-gun, Hokkaido	674	National land (national forest)	December 28, 1977	Beech natural forest near the northern limit Limestone vegetation	Special zone Wildlife protection zone
Shirakami Sanchi	Nishimeya-mura, Nakatsugaru-gun, Aomori Fukaura -cho, Nishitsugaru-gun, Aomori Ajigasawa-cho, Nishitsugaru-gun, Aomori Fujisato-cho, Yamamoto-gun, Akita	14,043	〃	July 10, 1992	The biggest beech natural forest in Japan, rare flora and fauna including dryocopus martius etc.	Partially special zones (9,844ha) Partially wildlife protection zones (9,844ha)
Wagadake	Nishiwaga-machi, Waga-gun, Iwate	1,451	〃	May 21, 1981	Natural forest comprising beech and oak, pumila vegetation, snowbed vegetation	Special zone Wildlife protection zone
Hayachine	Miyako-shi, Iwate	1,370	〃	May 17, 1975	Alpine, subalpine vegetation, serpentine vegetation, natural forest comprising red spruce	Special zone Wildlife protection zone (322ha)
Osabiyama	Nasu Shiobara-shi, Tochigi	545	〃	March 16, 1981	Beech, maries firnatural forest	Special zone
Head of River Tone	Minakami -machi, Tone-gun, Gunma	2,318	〃	December 28, 1977	Alpine wind blow scrub forest, beech, oak natural forest, snowbed vegetation	Special zone Wildlife protection zone
Sasagamine	Niihama-shi, Ehime Saijo-shi, Ehime Ino-cho, Agawa-gun, Kochi	537	National land (national forest) Private lands	March 31, 1982	Beech ・ abies veitchii var.sikokiana natural forest	Ehime (National land 31ha, Private land 2ha) Kochi (National land 504ha) Special zone Partially wildlife protection zones (259ha)
Shiragadake	Asagiri-cho, Kuma-gun, Kumamoto	150	National land (National forest)	March 21, 1980	Beech natural forest near the southern limit	Special zone
Inaodake	Minami Osumi-cho, Kimotsuki-gun, Kagoshima Kinko-cho, Kimotsuki-gun, Kagoshima Kimotsuki-cho, Kimotsuki-gun, Kagoshima	377	〃	May 17, 1975	Laurel forest mainly consisted of Distylium racemosum and Quercus salicina	Special zone
Sakiyamawan ・Amitoriwan	Taketomi-cho, Yaeyama-gun, Okinawa	1,077	Sea surface	June 28, 1983	Hordes of forest of thistle coral, coral reef	Marine special zone
Total	10 regions	22,542				

3.15 Area of Wilderness Areas, Nature Conservation Areas (2)

As of March 31st, 2017

Summary table of area of prefectural nature conservation area in each prefecture (Unit: ha)

Prefectures	Prefectural land areas (A)	Number: Conservation areas	Number: Special zones	Nature conservation areas: Conservation areas (B)	Nature conservation areas: Special zones	Area by land ownership: National lands: Conservation areas	National lands: Special zones	Public lands: Conservation areas	Public lands: Special zones	Private lands: Conservation areas	Private lands: Special zones	(B) / (A) (%)
Hokkaido	8,342,422	7	7	5,957.83	3,033.47	260.74	82.92	5,247.31	2,889.12	449.78	61.43	0.071
Aomori	964,540	9	9	1,230.17	1,083.09	1,190.99	1,054.27	22.10	22.10	17.08	6.72	0.128
Iwate	1,527,501	12	8	2,135.45	434.26	465.35	242.36	429.00	100.55	1,241.10	91.35	0.140
Miyagi	728,214	16	8	8,574.17	764.89	2,679.34	340.59	2,170.29	163.62	3,724.54	260.68	1.177
Akita	1,163,754	18	14	823.59	410.61	280.79	279.99	338.72	100.04	204.08	30.58	0.071
Yamagata	932,315	5	5	5,105.96	2,181.75	4,372.74	2,172.12	0.73	0.73	732.49	8.90	0.548
Fukushima	1,378,375	47	31	4,867.41	1,693.42	2,189.97	1,239.16	1,225.89	204.09	1,451.55	250.17	0.353
Ibaraki	609,693	34	15	645.21	82.19	133.10	63.23	69.37		442.74	18.96	0.106
Tochigi	640,828	29	10	4,736.61	539.54	370.68	360.42	1,531.68	179.12	2,834.25		0.739
Gunma	636,228	26	17	5,327.21	3,349.69	3,829.00	2,814.57	363.29	1.80	1,134.92	533.32	0.837
Saitama	379,775	16	7	518.24	150.87	0.17		11.50	6.00	506.57	144.87	0.136
Chiba	515,764	9	6	1,773.75	291.54	291.15	143.63	912.88	125.57	569.72	22.34	0.344
Tokyo	219,090	1	1	405.30	350.23			380.22	325.15	25.08	25.08	0.185
Kanagawa	241,581	70	1	11,236.40	33.47	645.30		5,356.07	16.87	5,235.03	16.60	4.651
Niigata	1,258,410	23	16	2,008.42	1,204.36	1,055.88	961.49	677.28	90.72	275.26	152.15	0.160
Toyama	424,761	11	9	623.78	101.04	15.99	9.14	94.37	40.49	513.42	51.41	0.147
Ishikawa	418,615	7	4	1,050.50	938.00	811.50	811.50	201.20	91.70	37.80	34.80	0.251
Fukui	419,043	2	2	273.12	169.92	162.12	162.12			111.00	7.80	0.065
Yamanashi	446,499	13	0	2,144.33	0.00	3.23		2,071.06		70.04		0.480
Nagano	1,356,156	8	8	790.42	755.22	713.56	713.56	50.13	34.90	26.73	6.76	0.058
Gifu	1,062,129	16	15	2,956.87	1,918.56	1,760.56	1,578.68	21.95	4.92	1,174.36	334.96	0.278
Shizuoka	777,870	7	7	5,186.47	1,982.02	1,459.00	976.00	1,058.58	712.95	2,668.89	293.07	0.667
Aichi	517,240	15	18	292.11	108.18	0.09	0.09	219.45	86.39	72.57	21.70	0.056
Mie	577,439	5	4	463.40	241.80	14.90	11.80	350.30	228.80	98.20	1.20	0.080
Shiga	401,738	0	0	0.00	0.00							0.000
Kyoto	461,220	2	2	221.87	102.75			163.92	102.75	57.95		0.048
Osaka	190,499	5	5	38.33	29.90	0.15				38.18	29.90	0.020
Hyogo	840,090	16	7	398.30	78.90	40.00	40.00			358.30	38.90	0.047
Nara	369,094	1	1	92.10	92.10			88.46	88.46	3.64	3.64	0.025
Wakayama	472,468	7	7	329.39	297.47	314.71	282.79	0.59	0.59	14.09	14.09	0.070
Tottori	350,705	15	15	153.70	102.15	20.40	18.80	29.20	19.55	104.10	63.80	0.044
Shimane	670,823	6	6	178.74	109.30	4.40	4.40	75.62	47.53	98.72	57.37	0.027
Okayama	711,462	3	2	101.33	38.49	3.20	2.81	94.50	35.68	3.63		0.014
Hiroshima	847,938	27	26	2,054.12	1,248.39	316.02	284.09	207.73	144.63	1,530.37	819.67	0.242
Yamaguchi	611,230	0	0	0.00	0.00							0.000
Tokushima	414,693	2	2	39.00	22.50	2.00	2.00			37.00	20.50	0.009
Kagawa	187,673	4	4	88.02	83.53			0.56	0.05	87.46	83.48	0.047
Ehime	567,610	2	2	1,914.37	453.03	211.34	50.74	652.93	126.45	1,050.10	275.84	0.337
Kochi	710,391	1	1	4.70	4.70					4.70	4.70	0.001
Fukuoka	498,640	4	4	134.11	125.21			41.41	32.71	92.70	92.50	0.027
Saga	244,064	2	2	243.93	130.93			139.82	126.82	104.11	4.11	0.100
Nagasaki	413,232	15	6	733.12	130.70	26.10	0.50	374.57	130.20	332.45		0.177
Kumamoto	740,932	7	7	182.01	149.25	48.65	48.65	120.18	91.35	13.18	9.25	0.025
Oita	634,061	6	6	16.16	12.92			3.90	3.90	12.26	9.02	0.003
Miyazaki	773,531	2	2	183.97	183.97	183.97	183.97					0.024
Kagoshima	918,810	2	1	229.00	113.00	113.00	113.00	116.00				0.025
Okinawa	228,100	11	7	950.79	154.61	2.30	2.30	948.49	152.31			0.417
	1,283,332											0.000
Total	39,080,578	546	337	77,413.78	25,481.92	23,992.39	15,051.69	25,861.25	6,528.61	27,560.14	3,901.62	0.198

Note:
The prefectural land area is based on the survey by Geospatial Information Authority of Japan (as of October, 2014).

Source: Materials by Ministry of the Environment

3.16 Area of World Natural Heritages

As of January 2014

(Unit:ha)

Area	Area（ha）
Yakushima	10,747
Shirakami-Sanchi	16,971
Shiretoko	71,103
Ogasawara islands	7,939

Source: Materials by Ministry of the Environment

3.17 Annual Survey on the Administrative Measures based on Hot Springs Law

	New excavations																			Additional drillings																
	New excavations			License Renewals	Corporate merger, divestiture			Inheritance			Changing facilities, etc.			Protection measures for disasters	Revocation of Licenses	Measures for the public interest	Orders of emergency measures	Restitution order	Additional Drillings			License Renewals	Corporate merger, divestiture			Inheritance			Changing facilities, etc.			Protection measures for disasters	Revocation of Licenses	Measures for the public interest	Orders of emergency measures	Restitution order
	Applied	Permitted	Declined		Applied	Permitted	Declined	Applied	Permitted	Declined	Applied	Permitted	Declined						Applied	Permitted	Declined		Applied	Permitted	Declined	Applied	Permitted	Declined	Applied	Permitted	Declined					
FY2003	601	583	1	0	-	-	-	-	-	-	-	-	-	-	0	0	-	0	17	17	0	※	-	-	-	-	-	-	-	-	-	-	※	※	-	※
2004	624	611	6	9	-	-	-	-	-	-	-	-	-	-	11	0	-	1	24	23	0	※	-	-	-	-	-	-	-	-	-	-	※	※	-	※
2005	535	512	10	4	-	-	-	-	-	-	-	-	-	-	1	0	-	0	24	22	2	※	-	-	-	-	-	-	-	-	-	-	※	※	-	※
2006	544	534	5	9	-	-	-	-	-	-	-	-	-	-	1	0	-	0	37	37	0	※	-	-	-	-	-	-	-	-	-	-	※	※	-	※
2007	420	415	0	4	0	0	0	1	1	0	-	-	-	-	0	0	-	0	35	33	0	0	0	0	0	0	0	0	-	-	-	-	0	0	-	0
2008	332	325	3	4	0	0	0	0	0	0	1	1	0	0	0	0	0	0	29	28	1	0	0	0	0	0	0	0	0	0	0	0	0	0	0	0
2009	242	233	1	3	1	1	0	0	0	0	0	0	0	0	0	0	0	0	23	26	0	0	0	0	0	0	0	0	0	0	0	0	0	0	0	0
2010	229	231	1	0	0	0	0	0	0	0	0	0	0	0	0	0	0	0	22	22	0	0	0	0	0	0	0	0	0	0	0	0	0	0	0	0
2011	200	196	1	5	0	0	0	0	0	0	0	0	0	0	0	0	0	0	20	20	0	0	0	0	0	0	0	0	0	0	0	0	0	0	0	0
2012	197	193	0	0	0	0	0	4	0	4	1	1	0	0	0	0	0	0	9	10	0	0	0	0	0	0	0	0	0	0	0	0	0	0	0	0
2013	219	214	0	1	0	0	0	0	0	0	1	1	0	0	0	0	0	0	24	19	0	0	0	0	0	0	0	0	0	0	0	0	0	0	0	0
2014	219	207	1	0	0	0	0	0	0	0	1	1	0	0	0	0	0	0	21	19	0	0	0	0	0	0	0	0	0	0	0	0	0	0	0	0
2015	264	243	0	1	1	1	0	0	0	0	0	0	0	0	0	0	0	0	23	17	0	0	0	0	0	0	0	0	0	0	0	0	0	0	0	0

	Power equipment															Extraction of hot springs																				
																Approval for extraction															Confirmation of the flammable natural gas concentration					
	Power equipment			License Renewals	Corporate merger, divestiture			Inheritance			Revocation of Licenses	Order of the necessary measures for the public interest	Restitution order	Restriction order on extracting hot springs	Drilling for other purposes	Permits			Corporate merger, divestiture			Inheritance			Changing facilities, etc.			Revocation of Licenses	Order of Emergency measures	Confirmation of the flammable natural gas concentration			Revocation of confirmation	Protection measures for disasters after abandon	Order of Emergency measures
	Applied	Permitted	Declined		Applied	Permitted	Declined	Applied	Permitted	Declined						Applied	Permitted	Declined	Applied	Permitted	Declined	Applied	Permitted	Declined	Applied	Permitted	Declined			Applied	Permitted	Declined			
FY2003	402	396	0	※	-	-	-	-	-	-	※	※	※	0	0	-	-	-	-	-	-	-	-	-	-	-	-	-	-	-	-	-	-	-	-	-
2004	483	482	0	※	-	-	-	-	-	-	※	※	※	0	0	-	-	-	-	-	-	-	-	-	-	-	-	-	-	-	-	-	-	-	-	-
2005	454	448	0	※	-	-	-	-	-	-	※	※	※	0	0	-	-	-	-	-	-	-	-	-	-	-	-	-	-	-	-	-	-	-	-	-
2006	427	427	1	※	-	-	-	-	-	-	※	※	※	0	0	-	-	-	-	-	-	-	-	-	-	-	-	-	-	-	-	-	-	-	-	-
2007	378	376	1	1	1	1	0	0	0	0	0	0	0	0	0	-	-	-	-	-	-	-	-	-	-	-	-	-	-	-	-	-	-	-	-	-
2008	320	313	1	1	0	0	0	0	0	0	0	0	0	0	0	1,549	563	0	0	0	0	0	0	0	2	2	0	0	0	13,894	13,637	5	0	0	0
2009	261	272	0	0	0	0	0	0	0	0	0	0	0	0	0	388	1,012	0	14	15	0	2	2	0	701	672	0	0	0	1,159	1,389	0	0	0	0
2010	227	225	0	0	0	0	0	0	0	0	0	0	0	0	0	85	96	0	6	6	0	3	3	0	89	121	0	0	0	640	648	0	1	0	0
2011	220	219	0	0	0	0	0	0	0	0	0	0	0	0	0	68	63	0	11	11	0	2	2	0	18	17	0	0	0	236	234	0	1	0	0
2012	181	182	0	0	0	0	0	0	0	0	0	0	0	0	0	56	60	0	11	11	0	0	0	0	11	11	0	0	0	204	204	0	2	0	0
2013	184	185	0	0	0	0	0	0	0	0	0	0	0	0	0	57	56	0	6	6	0	0	0	0	12	12	0	0	0	166	165	0	0	0	0
2014	170	167	0	0	0	0	0	0	0	0	0	0	0	0	0	57	58	0	8	7	0	2	2	0	12	12	0	0	0	164	163	0	0	0	0
2015	158	160	0	0	0	0	0	0	0	0	0	0	0	0	0	79	80	0	9	9	0	1	1	0	13	14	0	0	0	203	203	0	1	0	0

	Utilization of hot springs																						Institutions of					
	For bathing									For drinking																		
	Bathing			Corporate merger, divestiture			Inheritance			Drinking			Corporate merger, divestiture			Inheritance			Correction order of publicly posted information	Revocation of Licenses	Order of limited use	Registration			Revocation of registrations	Accusation of violating laws	Gross number of the task-force meetings to be held
	Applied	Permitted	Declined	Applied	Permitted	Declined	Applied	Permitted	Declined	Applied	Permitted	Declined	Applied	Permitted	Declined	Applied	Permitted	Declined				Applied	Permitted	Declined			
FY2002	2,273	2,287	0	-	-	-	-	-	-	100	98	1	-	-	-	-	-	-	-	0	0	-	-	-	-	1	120
2003	2,588	2,572	0	-	-	-	-	-	-	87	88	0	-	-	-	-	-	-	-	0	0	-	-	-	-	0	124
2004	4,561	4,495	0	-	-	-	-	-	-	120	122	0	-	-	-	-	-	-	-	0	0	-	-	-	-	0	124
2005	4,486	4,518	0	-	-	-	-	-	-	126	124	0	-	-	-	-	-	-	-	0	0	-	-	-	-	0	119
2006	3,590	3,585	0	-	-	-	-	-	-	97	98	0	-	-	-	-	-	-	-	0	0	-	-	-	-	0	118
2007	3,224	3,218	0	45	43	0	19	19	0	93	93	0	1	1	0	2	2	0	0	0	0	15	15	0	0	0	118
2008	2,584	2,598	0	97	99	0	46	45	0	73	71	0	1	1	0	2	2	0	0	0	0	20	20	0	0	0	116
2009	2,433	2,427	0	326	329	0	43	43	0	69	69	0	2	2	0	0	0	0	55	0	0	6	6	0	1	0	102
2010	2,021	2,064	0	159	159	0	52	52	0	65	64	0	2	2	0	3	3	0	5	0	0	3	3	0	0	0	108
2011	1,752	1,755	0	161	161	0	38	38	0	50	50	0	4	4	0	0	0	0	0	2	0	3	3	0	0	0	104
2012	1,547	1,547	0	150	150	0	47	47	0	27	27	0	1	1	0	1	1	0	1	1	0	4	4	0	0	0	101
2013	1,701	1,667	0	125	125	0	54	56	0	28	28	0	3	3	0	3	3	0	0	0	0	1	1	0	0	0	100
2014	1,741	1,728	0	174	174	0	74	74	0	24	24	0	9	9	0	3	3	0	0	0	0	1	1	0	0	0	92
2015	1,518	1,496	0	244	243	0	39	39	0	35	35	0	7	7	0	3	3	0	52	0	0	1	1	0	0	0	101

Note:
※Up to 2006, "Number of Renewals," "Revocation of Permission (only New excavations, Drilling and Power equipment)," "Measures for the public interest" and "Restitution order" were not classified and were recorded in the column under "New excavations" solely for the statistical use purpose.

Source: "Survey on the Administrative Measures based on Hot Springs Law for 2015," Ministry of the Environment

3.18 Survey on the Administrative Measures based on Hot Springs Law (by prefecture) (1)

	New excavations																	
	New excavations			License Renewals	Corporate merger, divestiture			Inheritance			Changing facilities.			Protection measures for disasters	Revocation of Licenses	Measures on the public interest	Orders of emergency measures	Restitution order
	Applied	Permitted	Declined		Applied	Permitted	Declined	Applied	Permitted	Declined	Applied	Permitted	Declined					
Hokkaido	24	24	0	0	0	0	0	0	0	0	0	0	0	0	0	0	0	0
Aomori	13	13	0	0	0	0	0	0	0	0	0	0	0	0	0	0	0	0
Iwate	1	1	0	0	0	0	0	0	0	0	0	0	0	0	0	0	0	0
Miyagi	1	1	0	0	0	0	0	0	0	0	0	0	0	0	0	0	0	0
Akita	8	8	0	0	0	0	0	0	0	0	0	0	0	0	0	0	0	0
Yamagata	3	3	0	0	0	0	0	0	0	0	0	0	0	0	0	0	0	0
Fukushima	7	7	0	0	0	0	0	0	0	0	0	0	0	0	0	0	0	0
Ibaraki	0	0	0	0	0	0	0	0	0	0	0	0	0	0	0	0	0	0
Tochigi	3	3	0	0	0	0	0	0	0	0	0	0	0	0	0	0	0	0
Gunma	0	0	0	0	0	0	0	0	0	0	0	0	0	0	0	0	0	0
Saitama	1	1	0	0	0	0	0	0	0	0	0	0	0	0	0	0	0	0
Chiba	3	3	0	0	0	0	0	0	0	0	0	0	0	0	0	0	0	0
Tokyo	2	2	0	0	0	0	0	0	0	0	0	0	0	0	0	0	0	0
Kanagawa	4	4	0	0	0	0	0	0	0	0	0	0	0	0	0	0	0	0
Niigata	4	4	0	0	0	0	0	0	0	0	0	0	0	0	0	0	0	0
Toyama	4	4	0	0	0	0	0	0	0	0	0	0	0	0	0	0	0	0
Ishikawa	1	1	0	0	0	0	0	0	0	0	0	0	0	0	0	0	0	0
Fukui	0	1	0	0	0	0	0	0	0	0	0	0	0	0	0	0	0	0
Yamanashi	3	3	0	0	0	0	0	0	0	0	0	0	0	0	0	0	0	0
Nagano	1	1	0	0	0	0	0	0	0	0	0	0	0	0	0	0	0	0
Gifu	2	2	0	0	0	0	0	0	0	0	0	0	0	0	0	0	0	0
Shizuoka	5	5	0	0	0	0	0	0	0	0	0	0	0	0	0	0	0	0
Aichi	3	3	0	0	0	0	0	0	0	0	0	0	0	0	0	0	0	0
Mie	2	2	0	0	0	0	0	0	0	0	0	0	0	0	0	0	0	0
Shiga	0	0	0	0	0	0	0	0	0	0	0	0	0	0	0	0	0	0
Kyoto	1	1	0	0	1	1	0	0	0	0	0	0	0	0	0	0	0	0
Osaka	3	3	0	0	0	0	0	0	0	0	0	0	0	0	0	0	0	0
Hyogo	3	2	0	0	0	0	0	0	0	0	0	0	0	0	0	0	0	0
Nara	0	0	0	0	0	0	0	0	0	0	0	0	0	0	0	0	0	0
Wakayama	1	1	0	0	0	0	0	0	0	0	0	0	0	0	0	0	0	0
Tottori	3	3	0	0	0	0	0	0	0	0	0	0	0	0	0	0	0	0
Shimane	0	0	0	0	0	0	0	0	0	0	0	0	0	0	0	0	0	0
Okayama	0	0	0	0	0	0	0	0	0	0	0	0	0	0	0	0	0	0
Hiroshima	8	6	0	0	0	0	0	0	0		0	0	0	0	0	0	0	0
Yamaguchi	2	2	0	0	0	0	0	0	0	0	0	0	0	0	0	0	0	0
Tokushima	2	2	0	0	0	0	0	0	0	0	0	0	0	0	0	0	0	0
Kagawa	0	0	0	0	0	0	0	0	0	0	0	0	0	0	0	0	0	0
Ehime	2	2	0	0	0	0	0	0	0	0	0	0	0	0	0	0	0	0
Kochi	0	0	0	0	0	0	0	0	0	0	0	0	0	0	0	0	0	0
Fukuoka	5	5	0	0	0	0	0	0	0	0	0	0	0	0	0	0	0	0
Saga	1	1	0	0	0	0	0	0	0	0	0	0	0	0	0	0	0	0
Nagasaki	1	1	0	0	0	0	0	0	0	0	0	0	0	0	0	0	0	0
Kumamoto	10	10	0	1	0	0	0	0	0	0	0	0	0	0	0	0	0	0
Oita	83	83	0	0	0	0	0	0	0	0	0	0	0	0	0	0	0	0
Miyazaki	5	5	0	0	0	0	0	0	0	0	0	0	0	0	0	0	0	0
Kagoshima	39	18	0	0	0	0	0	0	0	0	0	0	0	0	0	0	0	0
Okinawa	0	2	0	0	0	0	0	0	0	0	0	0	0	0	0	0	0	0
Total of FY2015	264	243	0	1	1	1	0	0	0	0	0	0	0	0	0	0	0	0
Total of FY2014	219	207	1	0	0	0	0	0	0	0	1	1	0	0	0	0	0	0
Net change	45	36	-1	1	1	1	0	0	0	0	-1	-1	0	0	0	0	0	0
% vs. the previous year	120.5	117.4	0.0	0.0	0.0	0.0	0.0	0.0	0.0	0.0	0.0	0.0	0.0	0.0	0.0	0.0	0.0	0.0

3.18 Survey on the Administrative Measures based on Hot Springs Law (by prefecture) (2)

	Additional drillings																	
	Increasing number of Drillings			License Renewals	Corporate merger, divestiture			Inheritance			Changing facilities.			Protection measures for disasters	Revocation of Licenses	Measures on the public interest	Orders of emergency measures	Restitution order
	Applied	Permitted	Declined		Applied	Permitted	Declined	Applied	Permitted	Declined	Applied	Permitted	Declined					
Hokkaido	0	0	0	0	0	0	0	0	0	0	0	0	0	0	0	0	0	0
Aomori	0	0	0	0	0	0	0	0	0	0	0	0	0	0	0	0	0	0
Iwate	0	0	0	0	0	0	0	0	0	0	0	0	0	0	0	0	0	0
Miyagi	0	0	0	0	0	0	0	0	0	0	0	0	0	0	0	0	0	0
Akita	0	0	0	0	0	0	0	0	0	0	0	0	0	0	0	0	0	0
Yamagata	0	0	0	0	0	0	0	0	0	0	0	0	0	0	0	0	0	0
Fukushima	0	0	0	0	0	0	0	0	0	0	0	0	0	0	0	0	0	0
Ibaraki	0	0	0	0	0	0	0	0	0	0	0	0	0	0	0	0	0	0
Tochigi	0	0	0	0	0	0	0	0	0	0	0	0	0	0	0	0	0	0
Gunma	0	0	0	0	0	0	0	0	0	0	0	0	0	0	0	0	0	0
Saitama	0	0	0	0	0	0	0	0	0	0	0	0	0	0	0	0	0	0
Chiba	0	0	0	0	0	0	0	0	0	0	0	0	0	0	0	0	0	0
Tokyo	0	0	0	0	0	0	0	0	0	0	0	0	0	0	0	0	0	0
Kanagawa	1	1	0	0	0	0	0	0	0	0	0	0	0	0	0	0	0	0
Niigata	0	0	0	0	0	0	0	0	0	0	0	0	0	0	0	0	0	0
Toyama	0	0	0	0	0	0	0	0	0	0	0	0	0	0	0	0	0	0
Ishikawa	0	0	0	0	0	0	0	0	0	0	0	0	0	0	0	0	0	0
Fukui	0	0	0	0	0	0	0	0	0	0	0	0	0	0	0	0	0	0
Yamanashi	0	0	0	0	0	0	0	0	0	0	0	0	0	0	0	0	0	0
Nagano	0	0	0	0	0	0	0	0	0	0	0	0	0	0	0	0	0	0
Gifu	0	0	0	0	0	0	0	0	0	0	0	0	0	0	0	0	0	0
Shizuoka	1	1	0	0	0	0	0	0	0	0	0	0	0	0	0	0	0	0
Aichi	0	0	0	0	0	0	0	0	0	0	0	0	0	0	0	0	0	0
Mie	0	0	0	0	0	0	0	0	0	0	0	0	0	0	0	0	0	0
Shiga	0	0	0	0	0	0	0	0	0	0	0	0	0	0	0	0	0	0
Kyoto	0	0	0	0	0	0	0	0	0	0	0	0	0	0	0	0	0	0
Osaka	0	0	0	0	0	0	0	0	0	0	0	0	0	0	0	0	0	0
Hyogo	0	0	0	0	0	0	0	0	0	0	0	0	0	0	0	0	0	0
Nara	0	0	0	0	0	0	0	0	0	0	0	0	0	0	0	0	0	0
Wakayama	0	0	0	0	0	0	0	0	0	0	0	0	0	0	0	0	0	0
Tottori	0	1	0	0	0	0	0	0	0	0	0	0	0	0	0	0	0	0
Shimane	1	0	0	0	0	0	0	0	0	0	0	0	0	0	0	0	0	0
Okayama	0	0	0	0	0	0	0	0	0	0	0	0	0	0	0	0	0	0
Hiroshima	0	0	0	0	0	0	0	0	0	0	0	0	0	0	0	0	0	0
Yamaguchi	0	0	0	0	0	0	0	0	0	0	0	0	0	0	0	0	0	0
Tokushima	0	0	0	0	0	0	0	0	0	0	0	0	0	0	0	0	0	0
Kagawa	0	0	0	0	0	0	0	0	0	0	0	0	0	0	0	0	0	0
Ehime	1	1	0	0	0	0	0	0	0	0	0	0	0	0	0	0	0	0
Kochi	0	0	0	0	0	0	0	0	0	0	0	0	0	0	0	0	0	0
Fukuoka	0	0	0	0	0	0	0	0	0	0	0	0	0	0	0	0	0	0
Saga	0	0	0	0	0	0	0	0	0	0	0	0	0	0	0	0	0	0
Nagasaki	0	0	0	0	0	0	0	0	0	0	0	0	0	0	0	0	0	0
Kumamoto	0	0	0	0	0	0	0	0	0	0	0	0	0	0	0	0	0	0
Oita	12	10	0	0	0	0	0	0	0	0	0	0	0	0	0	0	0	0
Miyazaki	0	0	0	0	0	0	0	0	0	0	0	0	0	0	0	0	0	0
Kagoshima	7	3	0	0	0	0	0	0	0	0	0	0	0	0	0	0	0	0
Okinawa	0	0	0	0	0	0	0	0	0	0	0	0	0	0	0	0	0	0
Total of FY2015	23	17	0	0	0	0	0	0	0	0	0	0	0	0	0	0	0	0
Total of FY2014	21	19	0	0	0	0	0	0	0	0	0	0	0	0	0	0	0	0
Net change	2	-2	0	0	0	0	0	0	0	0	0	0	0	0	0	0	0	0
% vs. the previous year	109.5	89.5	0.0	0.0	0.0	0.0	0.0	0.0	0.0	0.0	0.0	0.0	0.0	0.0	0.0	0.0	0.0	0.0

3.18 Survey on the Administrative Measures based on Hot Springs Law (by prefecture) (3)

	Power equipment														
	Power unit			License Renewals	Corporate merger, divestiture			Inheritance			Revocation of Licenses	Order of the necessary measures for the public interest	Restitution order	Restriction order on extracting hot spings	Drilling for other purposes
	Applied	Permitted	Declined		Applied	Permitted	Declined	Applied	Permitted	Declined					
Hokkaido	9	9	0	0	0	0	0	0	0	0	0	0	0	0	0
Aomori	8	8	0	0	0	0	0	0	0	0	0	0	0	0	0
Iwate	1	1	0	0	0	0	0	0	0	0	0	0	0	0	0
Miyagi	1	1	0	0	0	0	0	0	0	0	0	0	0	0	0
Akita	5	5	0	0	0	0	0	0	0	0	0	0	0	0	0
Yamagata	3	3	0	0	0	0	0	0	0	0	0	0	0	0	0
Fukushima	3	3	0	0	0	0	0	0	0	0	0	0	0	0	0
Ibaraki	1	1	0	0	0	0	0	0	0	0	0	0	0	0	0
Tochigi	1	1	0	0	0	0	0	0	0	0	0	0	0	0	0
Gunma	1	1	0	0	0	0	0	0	0	0	0	0	0	0	0
Saitama	0	0	0	0	0	0	0	0	0	0	0	0	0	0	0
Chiba	2	2	0	0	0	0	0	0	0	0	0	0	0	0	0
Tokyo	4	4	0	0	0	0	0	0	0	0	0	0	0	0	0
Kanagawa	1	1	0	0	0	0	0	0	0	0	0	0	0	0	0
Niigata	4	4	0	0	0	0	0	0	0	0	0	0	0	0	0
Toyama	0	0	0	0	0	0	0	0	0	0	0	0	0	0	0
Ishikawa	3	3	0	0	0	0	0	0	0	0	0	0	0	0	0
Fukui	1	1	0	0	0	0	0	0	0	0	0	0	0	0	0
Yamanashi	1	0	0	0	0	0	0	0	0	0	0	0	0	0	0
Nagano	2	2	0	0	0	0	0	0	0	0	0	0	0	0	0
Gifu	2	2	0	0	0	0	0	0	0	0	0	0	0	0	0
Shizuoka	15	15	0	0	0	0	0	0	0	0	0	0	0	0	0
Aichi	0	0	0	0	0	0	0	0	0	0	0	0	0	0	0
Mie	1	1	0	0	0	0	0	0	0	0	0	0	0	0	0
Shiga	2	2	0	0	0	0	0	0	0	0	0	0	0	0	0
Kyoto	1	1	0	0	0	0	0	0	0	0	0	0	0	0	0
Osaka	0	0	0	0	0	0	0	0	0	0	0	0	0	0	0
Hyogo	2	2	0	0	0	0	0	0	0	0	0	0	0	0	0
Nara	1	1	0	0	0	0	0	0	0	0	0	0	0	0	0
Wakayama	0	0	0	0	0	0	0	0	0	0	0	0	0	0	0
Tottori	3	5	0	0	0	0	0	0	0	0	0	0	0	0	0
Shimane	0	0	0	0	0	0	0	0	0	0	0	0	0	0	0
Okayama	1	1	0	0	0	0	0	0	0	0	0	0	0	0	0
Hiroshima	1	1	0	0	0	0	0	0	0	0	0	0	0	0	0
Yamaguchi	3	3	0	0	0	0	0	0	0	0	0	0	0	0	0
Tokushima	1	1	0	0	0	0	0	0	0	0	0	0	0	0	0
Kagawa	1	1	0	0	0	0	0	0	0	0	0	0	0	0	0
Ehime	2	2	0	0	0	0	0	0	0	0	0	0	0	0	0
Kochi	0	0	0	0	0	0	0	0	0	0	0	0	0	0	0
Fukuoka	4	4	0	0	0	0	0	0	0	0	0	0	0	0	0
Saga	0	0	0	0	0	0	0	0	0	0	0	0	0	0	0
Nagasaki	0	0	0	0	0	0	0	0	0	0	0	0	0	0	0
Kumamoto	9	9	0	0	0	0	0	0	0	0	0	0	0	0	0
Oita	42	41	0	0	0	0	0	0	0	0	0	0	0	0	0
Miyazaki	3	3	0	0	0	0	0	0	0	0	0	0	0	0	0
Kagoshima	11	13	0	0	0	0	0	0	0	0	0	0	0	0	0
Okinawa	2	2	0	0	0	0	0	0	0	0	0	0	0	0	0
Total of FY2015	158	160	0	0	0	0	0	0	0	0	0	0	0	0	0
Total of FY2014	170	167	0	0	0	0	0	0	0	0	0	0	0	0	0
Net change	-12	-7	0	0	0	0	0	0	0	0	0	0	0	0	0
% vs. the previous year	92.9	95.8	0.0	0.0	0.0	0.0	0.0	0.0	0.0	0.0	0.0	0.0	0.0	0.0	0.0

3.18 Survey on the Administrative Measures based on Hot Springs Law (by prefecture) (4)

	Extraction of hot springs																			
	New excavations														Confirmation the concentration of flammable gas					
	New excavations			Corporate merger, divestiture			Inheritance			Changing facilities.			Revocation of Licenses	Protection measures for disasters	Confirmation the concentration of flammable gas			Revocation of confirmation	Protection measures for disasters after abandon	Order of Emergency measures
	Applied	Permitted	Declined	Applied	Permitted	Declined	Applied	Permitted	Declined	Applied	Permitted	Declined			Applied	Permitted	Declined			
Hokkaido	7	7	0	0	0	0	0	0	0	4	5	0	0	0	13	13	0	0	0	0
Aomori	4	4	0	0	0	0	0	0	0	2	2	0	0	0	13	13	0	0	0	0
Iwate	0	0	0	0	0	0	0	0	0	0	0	0	0	0	21	21	0	0	0	0
Miyagi	0	0	0	0	0	0	0	0	0	0	0	0	0	0	3	3	0	0	0	0
Akita	2	2	0	0	0	0	0	0	0	0	0	0	0	0	9	9	0	1	0	0
Yamagata	0	0	0	0	0	0	0	0	0	0	0	0	0	0	0	0	0	0	0	0
Fukushima	1	1	0	0	0	0	0	0	0	0	0	0	0	0	3	3	0	0	0	0
Ibaraki	1	1	0	0	0	0	0	0	0	0	0	0	0	0	0	0	0	0	0	0
Tochigi	1	1	0	0	0	0	0	0	0	0	0	0	0	0	6	6	0	0	0	0
Gunma	5	5	0	0	0	0	0	0	0	0	0	0	0	0	1	1	0	0	0	0
Saitama	0	0	0	2	2	0	0	0	0	0	0	0	0	0	1	1	0	0	0	0
Chiba	3	3	0	2	2	0	0	0	0	1	1	0	0	0	3	3	0	0	0	0
Tokyo	2	2	0	0	0	0	0	0	0	0	0	0	0	0	2	2	0	0	0	0
Kanagawa	4	4	0	0	0	0	0	0	0	1	1	0	0	0	5	5	0	0	0	0
Niigata	2	2	0	0	0	0	0	0	0	1	1	0	0	0	1	1	0	0	0	0
Toyama	0	0	0	0	0	0	1	1	0	0	0	0	0	0	0	0	0	0	0	0
Ishikawa	1	1	0	0	0	0	0	0	0	0	0	0	0	0	2	2	0	0	0	0
Fukui	0	0	0	0	0	0	0	0	0	0	0	0	0	0	4	4	0	0	0	0
Yamanashi	1	1	0	0	0	0	0	0	0	1	1	0	0	0	5	5	0	0	0	0
Nagano	0	0	0	0	0	0	0	0	0	0	0	0	0	0	3	3	0	0	0	0
Gifu	0	0	0	1	1	0	0	0	0	0	0	0	0	0	3	3	0	0	0	0
Shizuoka	3	3	0	2	2	0	0	0	0	0	0	0	0	0	2	3	0	0	0	0
Aichi	1	1	0	0	0	0	0	0	0	0	0	0	0	0	0	0	0	0	0	0
Mie	3	3	0	0	0	0	0	0	0	1	1	0	0	0	0	0	0	0	0	0
Shiga	0	0	0	0	0	0	0	0	0	0	0	0	0	0	0	0	0	0	0	0
Kyoto	0	1	0	0	0	0	0	0	0	0	0	0	0	0	0	0	0	0	0	0
Osaka	1	1	0	1	1	0	0	0	0	0	0	0	0	0	0	0	0	0	0	0
Hyogo	3	3	0	0	0	0	0	0	0	1	1	0	0	0	0	0	0	0	0	0
Nara	0	0	0	0	0	0	0	0	0	0	0	0	0	0	0	0	0	0	0	0
Wakayama	0	0	0	1	1	0	0	0	0	0	0	0	0	0	0	0	0	0	0	0
Tottori	0	0	0	0	0	0	0	0	0	0	0	0	0	0	6	6	0	0	0	0
Shimane	18	18	0	0	0	0	0	0	0	0	0	0	0	0	0	0	0	0	0	0
Okayama	0	0	0	0	0	0	0	0	0	0	0	0	0	0	1	1	0	0	0	0
Hiroshima	0	0	0	0	0	0	0	0	0	0	0	0	0	0	1	1	0	0	0	0
Yamaguchi	0	0	0	0	0	0	0	0	0	0	0	0	0	0	4	4	0	0	0	0
Tokushima	0	0	0	0	0	0	0	0	0	0	0	0	0	0	0	0	0	0	0	0
Kagawa	0	0	0	0	0	0	0	0	0	0	0	0	0	0	1	1	0	0	0	0
Ehime	0	0	0	0	0	0	0	0	0	0	0	0	0	0	0	0	0	0	0	0
Kochi	1	1	0	0	0	0	0	0	0	0	0	0	0	0	0	0	0	0	0	0
Fukuoka	1	1	0	0	0	0	0	0	0	0	0	0	0	0	4	4	0	0	0	0
Saga	3	3	0	0	0	0	0	0	0	0	0	0	0	0	0	0	0	0	0	0
Nagasaki	1	1	0	0	0	0	0	0	0	0	0	0	0	0	2	2	0	0	0	0
Kumamoto	2	2	0	0	0	0	0	0	0	0	0	0	0	0	10	10	0	0	0	0
Oita	3	3	0	0	0	0	0	0	0	0	0	0	0	0	46	45	0	0	0	0
Miyazaki	0	0	0	0	0	0	0	0	0	0	0	0	0	0	2	2	0	0	0	0
Kagoshima	3	3	0	0	0	0	0	0	0	0	0	0	0	0	26	26	0	0	0	0
Okinawa	2	2	0	0	0	0	0	0	0	1	1	0	0	0	0	0	0	0	0	0
Total of FY2015	79	80	0	9	9	0	1	1	0	13	14	0	0	0	203	203	0	1	0	0
Total of FY2014	57	58	0	8	7	0	2	2	0	12	12	0	0	0	164	163	0	0	0	0
Net change	22	22	0	1	2	0	-1	-1	0	1	2	0	0	0	39	40	0	1	0	0
% vs. the previous year	0.0	140.4	0.0	1	112.5	0.0	0.0	50.0	0.0	0.0	116.7	0.0	0.0	0.0	0.0	123.8	0.0	0.0	0.0	0.0

3.18 Survey on the Administrative Measures based on Hot Springs Law (by prefecture) (5)

	Utilization of hot springs																					Institutions of registry data analyses					
	For bathing									For drinking									Correction order of publicly-posted information	Revocation of Licenses	Order of limited use	Registration			Revocation of registrations	Accusation of violating laws	Total number of the task-force meetings to be held
	Bath			Corporate merger, divestiture			Inheritance			Beverage			Corporate merger, divestiture			Inheritance											
	Applied	Permitted	Declined	Applied	Permitted	Declined	Applied	Permitted	Declined	Applied	Permitted	Declined	Applied	Permitted	Declined	Applied	Permitted	Declined				Applied	Permitted	Declined			
Hokkaido	227	232	0	9	9	0	0	0	0	1	1	0	0	0	0	0	0	0	0	0	0	0	0	0	0	0	4
Aomori	60	60	0	0	0	0	0	0	0	0	0	0	0	0	0	0	0	0	0	0	0	0	0	0	0	0	3
Iwate	38	38	0	0	0	0	0	0	0	0	0	0	0	0	0	0	0	0	0	0	0	0	0	0	0	0	3
Miyagi	39	39	0	38	38	0	0	0	0	0	0	0	0	0	0	0	0	0	0	0	0	0	0	0	0	0	2
Akita	23	23	0	1	1	0	0	0	0	0	0	0	0	0	0	0	0	0	51	0	0	0	0	0	0	0	3
Yamagata	16	16	0	0	0	0	1	1	0	1	1	0	0	0	0	0	0	0	0	0	0	0	0	0	0	0	3
Fukushima	64	64	0	25	25	0	3	3	0	1	1	0	0	0	0	0	0	0	0	0	0	0	0	0	0	0	2
Ibaraki	4	4	0	0	0	0	2	2	0	0	0	0	0	0	0	0	0	0	0	0	0	0	0	0	0	0	1
Tochigi	111	111	0	77	77	0	0	0	0	0	0	0	0	0	0	0	0	0	0	0	0	0	0	0	0	0	2
Gunma	41	57	0	0	0	0	0	0	0	0	1	0	0	0	0	0	0	0	0	0	0	0	0	0	0	0	3
Saitama	15	15	0	4	4	0	0	0	0	0	0	0	0	0	0	0	0	0	0	0	0	0	0	0	0	0	1
Chiba	22	21	0	2	2	0	0	0	0	0	0	0	0	0	0	0	0	0	0	0	0	0	0	0	0	0	2
Tokyo	53	52	0	0	0	0	0	0	0	0	0	0	0	0	0	0	0	0	0	0	0	1	1	0	0	0	3
Kanagawa	61	60	0	6	6	0	1	1	0	0	0	0	0	0	0	0	0	0	0	0	0	0	0	0	0	0	2
Niigata	19	19	0	0	0	0	2	2	0	0	0	0	0	0	0	0	0	0	0	0	0	0	0	0	0	0	2
Toyama	44	44	0	0	0	0	0	0	0	2	2	0	0	0	0	0	0	0	0	0	0	0	0	0	0	0	1
Ishikawa	12	12	0	1	1	0	0	0	0	0	0	0	0	0	0	0	0	0	0	0	0	0	0	0	0	0	2
Fukui	14	14	0	8	8	0	0	0	0	2	2	0	0	0	0	0	0	0	0	0	0	0	0	0	0	0	2
Yamanashi	29	27	0	0	0	0	1	1	0	0	0	0	0	0	0	0	0	0	0	0	0	0	0	0	0	0	2
Nagano	47	47	0	15	15	0	4	4	0	2	2	0	0	0	0	0	0	0	0	0	0	0	0	0	0	0	3
Gifu	11	11	0	3	3	0	2	2	0	1	1	0	0	0	0	1	1	0	0	0	0	0	0	0	0	0	3
Shizuoka	82	82	0	23	23	0	4	4	0	1	1	0	0	0	0	0	0	0	0	0	0	0	0	0	0	0	3
Aichi	23	26	0	0	0	0	0	0	0	0	0	0	0	0	0	0	0	0	0	0	0	0	0	0	0	0	2
Mie	44	40	0	13	13	0	0	0	0	0	0	0	0	0	0	0	0	0	0	0	0	0	0	0	0	0	2
Shiga	3	3	0	0	0	0	0	0	0	0	0	0	0	0	0	0	0	0	0	0	0	0	0	0	0	0	2
Kyoto	12	14	0	0	0	0	0	0	0	0	0	0	0	0	0	0	0	0	0	0	0	0	0	0	0	0	1
Osaka	8	7	0	0	0	0	0	0	0	0	0	0	0	0	0	0	0	0	0	0	0	0	0	0	0	0	2
Hyogo	31	31	0	4	4	0	3	3	0	0	0	0	0	0	0	0	0	0	0	0	0	0	0	0	0	0	2
Nara	8	8	0	0	0	0	2	2	0	0	0	0	0	0	0	0	0	0	0	0	0	0	0	0	0	0	2
Wakayama	20	20	0	3	3	0	0	0	0	1	1	0	0	0	0	0	0	0	0	0	0	0	0	0	0	0	2
Tottori	14	14	0	1	1	0	2	2	0	0	0	0	0	0	0	0	0	0	0	0	0	0	0	0	0	0	3
Shimane	0	0	0	0	0	0	0	0	0	0	0	0	0	0	0	0	0	0	0	0	0	0	0	0	0	0	1
Okayama	10	10	0	1	0	0	1	1	0	0	0	0	0	0	0	0	0	0	0	0	0	0	0	0	0	0	1
Hiroshima	24	18	0	0	0	0	0	0	0	3	2	0	7	7	0	1	1	0	0	0	0	0	0	0	0	0	2
Yamaguchi	25	25	0	1	1	0	1	1	0	0	0	0	0	0	0	0	0	0	0	0	0	0	0	0	0	0	2
Tokushima	3	3	0	0	0	0	0	0	0	0	0	0	0	0	0	0	0	0	0	0	0	0	0	0	0	0	1
Kagawa	2	2	0	0	0	0	0	0	0	0	0	0	0	0	0	0	0	0	0	0	0	0	0	0	0	0	1
Ehime	6	7	0	5	5	0	0	0	0	0	0	0	0	0	0	0	0	0	0	0	0	0	0	0	0	0	2
Kochi	4	4	0	0	0	0	0	0	0	0	0	0	0	0	0	0	0	0	0	0	0	0	0	0	0	0	0
Fukuoka	28	28	0	0	0	0	1	1	0	1	1	0	0	0	0	0	0	0	0	0	0	0	0	0	0	0	3
Saga	0	0	0	0	0	0	0	0	0	0	0	0	0	0	0	0	0	0	0	0	0	0	0	0	0	0	1
Nagasaki	10	10	0	1	1	0	1	1	0	7	7	0	0	0	0	0	0	0	0	0	0	0	0	0	0	0	2
Kumamoto	45	44	0	1	1	0	2	2	0	4	4	0	0	0	0	0	0	0	0	0	0	0	0	0	0	0	3
Oita	98	82	0	0	0	0	4	4	0	5	5	0	0	0	0	1	1	0	1	0	0	0	0	0	0	0	6
Miyazaki	6	6	0	0	0	0	0	0	0	0	0	0	0	0	0	0	0	0	0	0	0	0	0	0	0	0	2
Kagoshima	60	44	0	2	2	0	2	2	0	3	3	0	0	0	0	0	0	0	0	0	0	0	0	0	0	0	4
Okinawa	2	2	0	0	0	0	0	0	0	0	0	0	0	0	0	0	0	0	0	0	0	0	0	0	0	0	0
Total of FY2015	1,518	1,496	0	244	243	0	39	39	0	35	35	0	7	7	0	3	3	0	52	0	0	1	1	0	0	0	101
Total of FY2014	1,741	1,728	0	174	174	0	74	74	0	24	24	0	9	9	0	3	3	0	0	0	0	1	1	0	0	0	92
Net change	-223	-232	0	70	69	0	-35	-35	0	11	11	0	-2	-2	0	0	0	0	52	0	0	0	0	0	0	0	9
% vs. the previous year	0.0	85.9	0.0	0.0	139.7	0.0	0.0	52.7	0.0	0.0	145.8	0.0	0.0	77.8	0.0	0.0	100.0	0.0	0.0	0.0	0.0	0.0	100.0	0.0	0.0	0.0	0.0

Source: "Survey on the Administrative Measures based on Hot Springs Law for 2012," Ministry of the Environment

3.19 Changes in Utilization of Hot Springs (1)

	Number of public health centers under the jurisdiction	Number of municipalities	Number of Hot Spring areas	(A) + (B)	(A) Number of used hot springs		(B) Number of unused hot springs		Number of hot spring by temperature (X)			
					Self-gushing hot springs	Pump-up hot springs	Self-gushing hot springs	Pump-up hot springs	X ＜ 25℃	25℃ ≦X ＜ 42℃	42℃≦X	Steam gas
1957	–	–	–	–	–	–	–	–	–	–	–	–
1958	–	–	–	–	–	–	–	–	–	–	–	–
1959	–	–	–	–	–	–	–	–	–	–	–	–
1960	–	–	–	–	–	–	–	–	–	–	–	–
1961	–	–	–	–	–	–	–	–	–	–	–	–
1962	446	916	1,518	13,079	–	–	–	–	–	–	–	–
1963	447	898	1,207	10,395	5,757	4,638	–	–	–	–	–	–
1964	469	950	1,667	11,398	5,485	4,541	–	–	1,165	1,660	7,639	–
1965	489	980	1,331	11,913	5,953	5,875	85	–	–	–	–	–
1966	520	1,003	1,390	12,180	6,060	5,826	86	–	–	–	–	–
1967	518	1,080	1,479	13,563	5,521	6,087	1,955	–	1,555	2,235	8,350	738
1968	532	1,110	1,590	14,221	5,409	6,525	2,287	–	1,694	2,429	8,703	693
1969	535	1,162	1,609	14,827	5,427	6,844	2,556	–	1,765	2,411	9,044	771
1970	552	1,207	1,748	15,436	5,354	7,028	1,309	1,745	1,889	2,634	9,274	807
1971	552	1,236	1,802	16,002	5,474	7,288	1,308	1,932	2,007	2,801	9,442	870
1972	562	1,283	1,845	16,308	5,242	7,554	1,398	2,114	2,062	3,053	9,491	794
1973	568	1,313	1,901	16,681	5,146	7,893	1,380	2,262	2,267	3,132	9,681	813
1974	569	1,320	1,916	17,160	5,117	8,086	1,546	2,411	2,165	3,338	9,969	717
1975	570	1,361	1,939	17,491	5,181	8,297	1,455	2,558	2,267	3,346	10,102	752
1976	580	1,386	1,988	17,733	5,218	8,362	1,501	2,652	2,242	3,274	10,049	775
1977	585	1,423	1,990	18,183	5,102	8,552	1,673	2,856	2,273	3,437	10,264	747
1978	575	1,440	2,012	18,678	5,129	8,652	1,751	3,146	2,324	3,736	10,185	815
1979	578	1,473	2,033	19,052	4,996	8,721	1,844	3,491	2,320	3,898	10,003	845
1980	566	1,451	2,053	19,506	5,019	8,824	1,886	3,777	2,434	3,955	10,215	884
1981	564	1,470	2,106	19,470	5,001	8,854	2,001	3,614	2,513	4,002	10,235	888
1982	567	1,477	2,118	19,768	5,112	9,055	1,972	3,629	2,525	4,107	10,491	954
1983	572	1,497	2,116	20,103	5,069	9,217	2,047	3,770	2,566	4,272	10,437	964
1984	576	1,522	2,127	20,151	5,035	9,293	2,030	3,793	2,628	4,277	10,509	945
1985	575	1,548	2,145	20,396	5,005	9,384	2,125	3,882	2,696	4,334	10,757	941
1986	582	1,574	2,155	20,759	5,098	9,497	2,106	4,058	2,713	4,359	10,842	961
1987	584	1,593	2,189	21,095	5,095	9,597	2,210	4,193	2,815	4,544	10,940	963
1988	594	1,635	2,254	21,336	5,002	9,759	2,258	4,317	2,870	4,612	10,918	948
1989	603	1,685	2,302	21,758	5,012	9,983	2,392	4,371	2,926	4,787	11,136	893
1990	608	1,732	2,360	22,353	5,040	10,277	2,409	4,627	3,105	5,088	11,401	934
1991	630	1,798	2,382	23,097	5,091	10,639	2,463	4,904	3,092	5,244	11,485	1,006
1992	645	1,875	2,357	23,568	5,134	10,931	2,463	5,039	3,216	5,371	11,513	993
1993	637	1,918	2,383	24,061	5,084	11,291	2,534	5,152	3,274	5,451	11,752	1,041
1994	648	1,963	2,431	24,679	5,062	11,633	2,661	5,323	3,267	5,692	12,213	1,096
1995	658	2,015	2,508	25,129	5,053	11,908	2,759	5,409	3,319	5,771	12,368	1,091
1996	646	2,074	2,565	25,455	5,031	12,131	2,894	5,399	3,405	5,917	12,545	1,101
1997	606	2,132	2,615	25,822	5,048	12,342	2,814	5,618	3,466	6,049	12,677	1,097
1998	562	2,184	2,839	26,077	5,080	12,606	2,865	5,526	3,391	6,172	12,916	1,119
1999	559	2,213	2,893	26,270	5,143	12,714	2,794	5,622	3,484	6,294	12,957	1,057
2000	541	2,238	2,988	26,505	5,164	12,873	2,868	5,604	3,505	6,443	13,070	1,057
2001	525	2,280	3,023	26,796	5,186	13,063	3,000	5,552	3,590	6,486	13,226	1,077
2002	518	2,292	3,102	27,043	5,180	13,328	2,956	5,579	3,626	6,543	13,144	1,084
2003	511	2,280	3,127	27,347	5,189	13,559	2,969	5,629	3,690	6,573	13,093	1,156
2004	495	1,939	3,114	27,644	5,120	13,805	2,989	5,730	3,759	6,753	13,209	1,166
2005	511	1,492	3,162	27,866	5,149	13,975	2,966	5,776	3,841	6,857	13,294	1,162
2006	505	1,489	3,157	28,154	5,122	14,115	3,055	5,862	3,885	6,952	13,275	1,147
2007	498	1,480	3,139	28,090	5,097	14,108	3,028	5,857	4,098	6,803	13,274	1,168
2008	502	1,470	3,133	28,033	4,874	13,997	3,149	6,013	4,062	6,741	13,226	1,155
2009	489	1,445	3,170	27,825	4,711	13,930	3,225	5,959	4,022	6,731	13,146	1,180
2010	489	1,440	3,185	27,671	4,460	13,476	3,325	6,410	4,044	6,842	12,921	1,069
2011	468	1,436	3,108	27,532	4,413	13,396	3,296	6,426	3,983	6,855	12,800	1,060
2012	467	1,436	3,085	27,221	4,286	13,354	3,232	6,346	3,920	6,886	12,707	936
2013	466	1,439	3,098	27,405	4,260	13,394	3,348	6,403	3,989	6,891	12,637	1,064
2014	462	1,434	3,088	27,367	4,142	13,181	3,484	6,560	4,021	6,859	12,574	1,082
2015	464	1,477	3,084	27,201	4,071	13,079	3,524	6,527	3,966	6,830	12,392	2,671

Notes:

"Number of Hot Spring areas" show the number of hot spring spots that have lodging facility.

3.19 Changes in Utilization of Hot Springs (2)

	Gush amount		Number of lodging facilities	Max. accommodation (# of guests)	Gross # of overnight stays in FY	Number of public bathhouses using hot springs	Gross # of overnight stays in FY in the public hot spa resorts
	Self-gushing hot springs required	Pump-up hot springs					
1957	–	–	7,556	302,041	40,701,812	–	–
1958	–	–	7,738	329,699	47,519,270	–	–
1959	–	–	7,913	358,005	49,471,913	–	–
1960	–	–	8,276	383,608	55,251,803	–	–
1961	–	–	8,744	456,226	77,551,499	–	–
1962	–	–	9,244	500,445	86,743,797	–	–
1963	930,110	–	10,319	562,516	85,675,621	1,588	–
1964	991,831	–	10,427	581,025	87,371,026	1,620	–
1965	1,109,633	–	10,904	649,439	93,311,028	1,629	–
1966	1,143,788	–	11,411	764,670	89,634,687	1,686	–
1967	1,207,194	–	12,586	751,138	96,050,339	1,594	–
1968	1,258,138	–	13,553	774,360	100,551,422	1,588	–
1969	1,334,612	–	13,252	805,118	101,261,143	1,780	–
1970	651,265	696,092	13,219	827,239	104,051,002	1,815	–
1971	624,190	659,394	13,004	856,731	109,616,365	1,746	–
1972	631,202	701,082	13,508	875,050	117,915,449	1,749	–
1973	613,776	734,778	14,006	939,972	121,463,272	1,815	–
1974	652,580	770,967	14,688	1,033,456	117,257,335	1,798	–
1975	668,199	799,772	14,598	993,994	110,228,798	1,992	–
1976	675,856	834,294	14,593	988,247	108,743,832	2,038	9,656,668
1977	688,448	838,147	14,758	1,001,543	108,582,166	2,096	9,410,245
1978	690,879	866,424	15,200	1,022,690	107,269,376	2,082	9,175,961
1979	681,099	923,859	15,619	1,056,043	111,295,210	2,065	9,370,058
1980	741,216	948,911	15,112	1,062,827	107,079,659	2,155	9,111,438
1981	757,276	984,030	15,141	1,079,357	108,757,430	2,257	9,326,813
1982	805,494	1,035,799	15,124	1,073,806	109,382,651	2,311	9,902,248
1983	790,207	1,055,883	15,014	1,074,788	107,813,584	2,358	9,982,442
1984	807,829	1,064,701	14,882	1,086,620	111,090,010	2,460	10,399,800
1985	784,585	1,089,414	15,002	1,096,035	113,898,046	2,594	11,319,002
1986	763,119	1,138,158	15,413	1,105,928	121,788,044	2,743	12,264,373
1987	816,773	1,252,447	15,383	1,120,849	125,507,775	2,884	12,601,237
1988	818,360	1,218,941	14,977	1,146,275	130,865,438	2,991	12,942,803
1989	831,159	1,256,338	15,085	1,168,157	134,870,936	3,112	13,964,049
1990	870,367	1,354,205	15,119	1,202,382	140,138,479	3,283	14,623,747
1991	888,410	1,427,296	15,082	1,210,747	142,853,123	3,576	14,149,655
1992	871,678	1,440,965	15,154	1,227,095	143,246,266	3,867	14,330,507
1993	880,058	1,495,445	15,227	1,245,672	139,728,475	4,038	14,031,097
1994	886,498	1,538,907	15,356	1,254,429	138,779,626	4,164	13,987,987
1995	876,108	1,628,592	15,714	1,288,594	140,572,876	4,375	13,791,341
1996	860,542	1,676,017	15,504	1,298,283	143,164,495	4,738	13,712,586
1997	868,832	1,735,812	15,643	1,332,588	140,301,952	5,080	13,301,386
1998	888,930	1,750,050	15,638	1,371,708	139,711,747	5,525	12,999,348
1999	894,295	1,772,844	15,548	1,357,089	135,377,318	5,835	14,716,682
2000	827,918	1,809,162	15,512	1,363,017	137,525,810	6,034	15,594,906
2001	819,328	1,791,219	15,558	1,373,318	137,097,634	6,433	15,121,005
2002	813,023	1,856,497	15,389	1,384,302	137,935,709	6,738	14,953,458
2003	800,891	1,880,287	15,390	1,387,981	136,285,534	7,006	15,320,428
2004	775,642	1,936,498	15,332	1,408,683	135,867,119	7,294	15,098,986
2005	831,640	1,929,660	15,024	1,413,088	136,613,954	7,431	14,725,041
2006	822,755	1,955,139	15,024	1,431,504	137,088,966	7,748	14,415,086
2007	821,438	1,977,980	14,907	1,410,100	135,872,728	7,859	11,699,874
2008	800,338	1,971,684	14,787	1,415,597	132,677,295	7,913	10,498,930
2009	793,482	1,958,776	14,294	1,407,164	127,929,516	7,913	10,479,554
2010	760,024	1,926,535	14,052	1,411,884	124,925,272	7,902	9,563,332
2011	738,111	1,943,562	13,754	1,394,107	120,061,329	7,717	8,976,989
2012	677,432	1,910,763	13,521	1,373,508	124,695,579	7,771	8,823,770
2013	726,357	1,916,348	13,358	1,377,387	126,422,229	7,816	8,951,999
2014	733,740	1,896,687	13,278	1,377,591	127,974,837	7,883	8,726,377
2015	681,444	1,886,379	13,108	1,371,063	132,064,038	7,864	8,856,161

Note:
The numbers of people who used accommodation facilities are for reference.

Source: "Survey on Hot Springs use for 2015," by Ministry of the Environment

3.20 Utilization of Hot Springs by prefecture (1)

	Number of public health centers under the jurisdictions	Number of municipalities	Number of Hot Spring areas	Number of sources of hot springs								
					(A) Number of used sources		(B) Number of unused sources		Number of sources of hot springs by temperature			
				(A) + (B)	Self-gushing	Pump-up	Self-gushing	Pump-up	X ＜ 25℃	25℃ ≦X ＜ 42℃	42℃≦X	Steam gas
Hokkaido	28	163	245	2,110	389	877	485	359	204	506	1,048	12
Aomori	6	39	133	1,084	102	495	191	296	38	234	657	0
Iwate	9	26	79	431	86	175	63	107	29	107	220	36
Miyagi	10	34	82	738	207	213	182	136	47	138	316	138
Akita	9	23	124	626	201	202	139	84	55	137	298	83
Yamagata	4	35	88	422	127	171	51	73	76	126	220	0
Fukushima	8	52	132	781	145	295	126	215	86	164	259	32
Ibaraki	12	33	36	146	20	76	15	35	78	56	12	0
Tochigi	6	24	68	630	163	268	112	87	45	146	272	4
Gunma	11	27	103	454	158	204	61	31	79	134	195	0
Saitama	16	43	27	114	10	89	0	15	28	70	15	0
Chiba	16	54	94	158	26	126	2	4	124	30	2	0
Tokyo	30	48	26	162	5	123	3	31	72	58	28	4
Kanagawa	16	26	33	606	79	368	54	105	97	135	270	25
Niigata	13	30	153	534	142	238	89	65	158	191	185	0
Toyama	9	15	69	170	54	77	15	24	32	67	71	0
Ishikawa	5	19	53	336	18	187	11	120	39	92	74	0
Fukui	6	16	38	158	5	91	6	56	21	46	29	0
Yamanashi	4	27	28	431	105	176	111	39	121	221	89	0
Nagano	11	70	224	976	269	438	129	140	198	266	413	2
Gifu	8	31	62	500	54	229	107	110	149	166	170	7
Shizuoka	9	32	117	2,263	98	1,104	44	1,017	85	300	745	5
Aichi	16	36	34	133	10	87	11	25	44	70	19	0
Mie	9	25	68	197	16	145	8	28	80	70	47	0
Shiga	7	14	23	86	6	47	9	24	39	45	2	0
Kyoto	8	17	39	136	11	84	16	25	51	72	13	0
Osaka	18	34	38	173	6	111	6	50	38	100	34	0
Hyogo	17	37	80	436	34	223	54	125	158	203	75	0
Nara	5	27	30	73	9	60	1	3	21	42	10	0
Wakayama	8	28	51	498	50	195	100	153	67	301	130	0
Tottori	3	15	15	365	32	158	34	141	16	47	128	0
Shimane	7	18	43	254	64	83	70	37	106	94	54	0
Okayama	7	23	37	223	36	73	52	62	133	83	7	0
Hiroshima	7	28	65	327	16	159	10	142	289	33	2	0
Yamaguchi	8	18	51	403	26	186	43	148	273	112	18	0
Tokushima	6	19	32	85	19	39	14	13	63	22	0	0
Kagawa	5	16	27	195	0	91	3	101	183	12	0	0
Ehime	7	19	38	201	27	100	42	32	106	64	19	0
Kochi	6	25	32	96	3	51	16	26	77	17	1	0
Fukuoka	16	55	54	429	8	237	4	180	78	213	113	0
Saga	5	18	24	184	4	109	8	63	49	77	58	0
Nagasaki	10	19	31	198	69	91	15	23	20	60	118	0
Kumamoto	11	41	54	1,345	132	609	170	434	37	438	766	25
Oita	10	16	64	4,342	684	2,826	264	568	76	596	3,275	386
Miyazaki	9	22	32	206	23	122	16	45	40	66	91	0
Kagoshima	8	30	100	2,773	319	962	562	930	60	597	1,818	298
Okinawa	5	10	8	13	4	9	0	0	1	6	6	1,614
Total FY2015	464	1,477	3,084	27,201	4,071	13,079	3,524	6,527	3,966	6,830	12,392	2,671
Total FY2014	462	1,434	3,088	27,367	4,142	13,181	3,484	6,560	4,021	6,859	12,574	1,082
Diff.	2	43	-4	-166	-71	-102	40	-33	-55	-29	-182	1,589
% vs. the previous year	100.4	103.0	99.9	99.4	98.3	99.2	101.1	99.5	98.6	99.6	98.6	246.9

Notes:

"Number of Hot Spring areas" show the number of hot spring spots that have lodging facility nearby.

3.20 Utilization of Hot Springs by prefecture (2)

As of the end of March, 2016

	Gush amount			Number of lodging facilities	Max. accommodation (# of guests)	Gross # of overnight stays in FY	Number of public bathhouses using hot springs	Gross # of overnight stays in FY in the public hot spa resorts
	Total	Self-gushing hot springs	Pump-up hot springs					
Hokkaido	235,346	65,432	169,914	648	122,126	13,708,026	456	756,434
Aomori	136,404	12,023	124,381	260	24,047	1,620,952	279	70,718
Iwate	108,280	58,665	49,615	197	24,726	2,256,640	89	34,517
Miyagi	26,820	4,687	22,132	229	34,022	2,513,184	157	77,100
Akita	88,801	38,551	50,250	238	21,919	1,655,160	222	394,286
Yamagata	49,346	18,591	30,755	342	31,365	2,410,052	154	601,026
Fukushima	83,634	27,666	55,968	556	59,716	4,473,562	208	482,755
Ibaraki	20,734	5,257	15,477	74	6,847	677,961	73	0
Tochigi	64,978	20,394	44,584	432	53,949	4,597,120	232	242,970
Gunma	54,936	26,095	28,841	594	54,069	5,716,140	297	465,948
Saitama	16,089	1,823	14,266	37	4,653	534,585	84	0
Chiba	14,288	2,005	12,283	167	44,735	3,180,471	157	
Tokyo	28,885	376	28,509	41	2,787	277,180	132	0
Kanagawa	34,540	6,312	28,228	595	48,707	4,847,015	185	13,554
Niigata	64,193	14,965	49,228	558	62,664	3,544,922	182	308,618
Toyama	30,603	18,223	12,380	128	16,203	1,388,267	73	0
Ishikawa	30,749	1,025	29,724	194	29,412	4,411,231	105	25,641
Fukui	7,938	689	7,249	141	21,087	1,373,309	48	0
Yamanashi	46,385	16,935	29,450	240	27,937	4,290,815	150	240,010
Nagano	116,734	45,431	71,303	1,190	98,246	7,918,332	654	817,616
Gifu	72,550	13,939	58,611	326	29,039	2,824,031	70	382,062
Shizuoka	120,716	11,708	109,008	1,878	144,482	11,585,115	493	29,815
Aichi	18,223	59	18,164	87	14,078	1,608,298	80	0
Mie	44,914	2,373	42,541	293	41,098	3,991,909	120	0
Shiga	10,114	1,580	8,534	43	8,200	1,147,540	25	0
Kyoto	18,203	1,423	16,780	170	14,235	1,617,792	69	78,533
Osaka	35,076	337	34,739	42	9,674	2,121,392	92	0
Hyogo	47,887	4,657	43,230	394	39,210	5,022,125	230	27,776
Nara	6,325	1,224	5,101	68	5,198	529,106	54	44,883
Wakayama	57,783	16,510	41,273	213	31,636	3,847,792	143	177,921
Tottori	20,419	531	19,888	116	14,174	1,216,972	53	55,417
Shimane	26,070	12,489	13,581	116	10,921	1,199,025	101	48,786
Okayama	23,184	5,008	18,176	88	8,631	871,380	96	155,655
Hiroshima	31,796	3,191	28,605	82	7,881	1,030,260	112	4,960
Yamaguchi	26,540	3,279	23,261	152	13,274	1,691,489	125	98,505
Tokushima	8,009	1,318	6,691	35	3,697	395,900	43	0
Kagawa	11,416	309	11,107	53	9,881	1,165,856	74	61,849
Ehime	19,151	5,285	13,866	98	11,672	1,593,205	122	30,969
Kochi	3,603	36	3,567	48	6,198	491,299	44	0
Fukuoka	59,898	1,058	58,840	92	10,633	1,356,075	142	36,370
Saga	20,649	1,171	19,479	110	9,431	843,711	133	64,749
Nagasaki	27,147	7,205	19,942	91	13,479	1,609,765	123	576,282
Kumamoto	134,447	25,092	109,355	413	33,719	3,257,600	342	391,230
Oita	279,462	116,810	162,652	779	45,813	5,493,615	371	1,455,313
Miyazaki	24,558	3,556	21,002	66	7,183	723,449	101	0
Kagoshima	156,324	54,781	101,543	385	32,948	2,355,880	553	603,893
Okinawa	3,678	1,369	2,309	9	5,461	1,078,533	16	0
Total FY2015	2,567,823	681,444	1,886,379	13,108	1,371,063	132,064,038	7,864	8,856,161
Total FY2014	2,630,428	733,740	1,896,687	13,278	1,377,591	127,974,837	7,883	8,726,377
Diff.	-62,605	-52,297	-10,308	-170	-6,528	4,089,201	-19	129,784
% vs. the previous year	97.6	92.9	99.5	98.7	99.5	103.2	99.8	101.5

Note:
Numbers of people who used accommodation facilities are only on a reference basis.

Source: “Survey on Hot Springs use for 2015,” Ministry of the Environment

3.21 Status of city parks (by prefecture) (1)

(As of the end of March, 2016)

Prefecture and major city names	Residential-area key park						City key park				Large-area park			
	Block parks		Neighborhood parks		Community parks		General parks		Sport parks		Wide-area parks		Recreational urban parks	
	Numbe of parks	Area(ha)	Numbe of parks	Area(ha)	Numbe of parks	Area(ha)	Numbe of parks	Area(ha)	Numbe of parks	Area(ha)	Numbe of parks	Area(ha)	Numbe of parks	Area(ha)
Hokkaido	3,562	721.22	356	766.26	97	531.09	104	3,041.55	68	1,691.12	11	908.44	0	0.00
Aomori	573	121.44	58	99.80	25	170.28	17	566.33	15	309.73	3	378.50	0	0.00
Iwate	1,049	150.74	56	98.94	12	82.41	21	468.47	10	184.35	2	188.11	0	0.00
Miyagi	1,002	171.02	64	124.07	28	153.73	12	241.41	9	128.31	4	148.41	0	0.00
Akita	416	104.24	30	67.33	36	146.36	25	582.37	7	119.08	3	289.90	0	0.00
Yamagata	622	143.53	63	92.31	14	84.19	25	492.14	10	123.41	1	56.10	2	186.90
Fukushima	743	184.71	87	166.01	21	96.68	27	524.46	15	250.84	5	299.21	0	0.00
Ibaraki	1,512	320.89	151	318.88	32	188.41	23	389.03	35	447.46	6	224.50	0	0.00
Tochigi	1,729	247.95	130	211.70	68	346.64	28	382.80	35	760.25	4	374.40	0	0.00
Gunma	1,093	237.05	137	244.22	41	210.13	30	666.24	18	275.52	1	60.30	0	0.00
Saitama	3,178	537.88	248	449.65	36	163.43	54	793.49	22	310.59	10	601.58	0	0.00
Chiba	4,465	611.47	229	433.57	56	288.45	29	425.67	23	259.11	4	158.52	1	38.33
Tokyo	2,914	414.10	184	340.00	25	181.11	29	364.31	22	150.04	8	405.06	0	0.00
Kanagawa	2,563	379.43	108	167.84	19	116.20	17	246.39	19	206.28	8	292.33	0	0.00
Niigata	714	155.34	66	101.10	28	152.03	38	712.87	27	253.53	2	130.43	1	58.02
Toyama	1,721	185.52	50	83.68	40	153.83	25	473.67	14	287.05	1	95.90	0	0.00
Ishikawa	826	177.99	54	87.17	17	68.39	24	439.93	19	279.67	6	145.57	0	0.00
Fukui	782	134.95	54	86.96	11	46.02	20	527.64	9	155.40	0	0.00	0	0.00
Yamanashi	121	33.87	29	64.97	14	68.18	9	129.67	8	124.67	5	217.40	0	0.00
Nagano	620	142.83	109	189.65	51	287.27	38	757.73	10	203.72	3	255.77	0	0.00
Gifu	1,110	235.99	79	130.19	41	185.48	18	318.15	27	240.38	4	343.15	0	0.00
Shizuoka	1,083	233.65	95	145.72	20	85.27	33	518.06	17	243.94	2	364.20	0	0.00
Aichi	2,437	606.53	221	382.39	61	290.57	32	568.94	23	373.24	6	521.96	0	0.00
Mie	2,420	289.68	88	143.61	24	148.42	25	433.31	15	194.29	1	36.79	1	60.12
Shiga	401	88.06	75	122.87	25	151.25	19	314.28	9	129.34	1	157.48	0	0.00
Kyoto	1,190	143.10	49	89.80	19	91.28	18	261.90	12	122.00	3	288.49	0	0.00
Osaka	3,489	498.57	218	363.28	35	155.05	21	332.91	1	23.60	15	820.10	0	0.00
Hyogo	3,518	504.19	176	317.94	56	268.69	49	619.46	18	198.01	9	1,025.70	0	0.00
Nara	1,703	235.01	78	142.33	24	126.74	13	180.70	6	84.57	2	559.39	0	0.00
Wakayama	184	51.17	30	53.24	10	40.23	10	125.92	7	111.98	0	0.00	0	0.00
Tottori	240	53.50	17	27.52	5	38.29	8	185.89	4	70.56	2	115.80	0	0.00
Shimane	239	53.43	20	51.41	8	59.31	20	274.68	9	154.62	3	251.00	0	0.00
Okayama	953	152.04	48	88.88	14	96.94	12	155.33	19	271.90	0	0.00	0	0.00
Hiroshima	1,716	239.52	64	117.27	15	86.61	20	244.93	15	200.33	3	165.70	0	0.00
Yamaguchi	941	160.98	49	103.91	28	168.71	26	619.29	12	163.41	5	420.33	0	0.00
Tokushima	183	30.01	27	38.44	7	24.86	9	123.95	4	59.46	1	65.75	0	0.00
Kagawa	348	54.04	29	49.01	15	83.94	9	137.28	8	127.52	1	67.87	0	0.00
Ehime	338	73.71	44	53.26	23	121.82	21	409.00	8	157.81	1	72.47	3	218.09
Kochi	739	76.01	30	45.60	8	43.04	8	156.91	4	20.61	4	232.02	0	0.00
Fukuoka	2,211	318.40	163	282.36	32	143.79	31	619.75	9	146.80	2	111.10	0	0.00
Saga	147	34.47	32	60.90	19	99.07	11	238.78	7	125.60	2	75.40	0	0.00
Nagasaki	996	171.55	71	136.04	25	155.07	25	523.66	4	94.28	1	39.89	0	0.00
Kumamoto	558	76.91	50	99.02	9	44.46	12	207.60	5	108.10	2	49.39	0	0.00
Oita	815	146.00	51	82.03	17	81.20	21	208.06	8	150.79	3	199.33	0	0.00
Miyazaki	782	147.77	63	117.29	18	84.80	19	354.95	22	344.54	3	282.35	0	0.00
Kagoshima	1,017	209.48	97	178.12	38	179.83	29	557.85	20	362.44	3	164.20	0	0.00
Okinawa	568	114.09	81	155.73	24	114.71	25	275.44	11	199.58	5	381.37	0	0.00
Total of prefectures	60,531	10,174.03	4,308	7,772.27	1,291	6,704.26	1,139	21,193.15	699	10,999.83	171	12,041.66	8	561.46
Sapporo	2,395	310.80	145	245.30	26	142.34	10	445.54	4	53.58	1	84.70	0	0.00
Sendai	1,433	175.61	55	106.11	10	75.28	5	93.48	1	15.42	1	94.85	0	0.00
Saitama	808	103.26	33	62.84	4	17.76	11	84.38	6	87.52	2	86.49	0	0.00
Chiba	886	131.44	65	102.75	9	40.86	6	221.47	2	73.54	2	122.11	0	0.00
District of Tokyo	3,437	560.72	127	229.99	30	160.55	51	579.30	22	191.83	5	249.38	0	0.00
Yokohama	2,291	383.65	195	324.01	45	204.40	17	287.90	7	168.70	4	189.42	0	0.00
Kawasaki	938	115.39	32	56.77	6	27.28	4	176.79	1	77.43	0	0.00	0	0.00
Sagamihara	550	46.86	12	18.72	3	12.19	5	72.68	2	29.20	1	77.68	0	0.00
Niigata	1,271	122.29	30	46.94	9	45.14	9	312.20	4	46.57	1	86.33	0	0.00
Shizuoka	384	64.37	22	39.17	2	12.54	5	94.10	2	42.18	0	0.00	0	0.00
Hamamatsu	399	59.88	23	35.99	5	19.25	13	242.09	6	59.28	1	34.60	0	0.00
Nagoya	1,223	270.09	104	173.20	28	154.92	7	231.37	25	208.10	3	304.52	0	0.00
Kyoto	822	111.18	33	58.10	7	38.60	4	48.81	10	83.86	2	100.14	0	0.00
Osaka	853	221.71	75	107.28	27	107.42	7	100.43	1	65.71	3	147.17	0	0.00
Sakai	1,065	85.24	37	97.55	9	36.40	6	94.80	2	25.12	2	140.30	0	0.00
Kobe	1,304	234.92	131	263.12	25	164.47	13	468.66	1	55.89	3	403.30	0	0.00
Okayama	319	82.36	30	56.16	15	217.57	5	90.62	3	47.75	0	0.00	0	0.00
Hiroshima	972	162.39	45	97.61	12	58.64	8	181.53	5	94.02	2	125.45	0	0.00
Kitakyushu	1,479	206.36	71	114.32	13	76.83	6	111.73	5	65.62	5	346.83	0	0.00
Fukuoka	1,344	178.25	74	123.37	9	46.51	9	261.03	7	96.04	0	0.00	0	0.00
Kumamoto	862	95.88	29	42.71	7	31.86	5	102.49	3	115.32	1	125.44	0	0.00
Total of major cities	25,035	3,722.65	1,368	2,402.01	301	1,690.81	206	4,301.40	119	1,702.68	39	2,718.71	0	0.00
Nation wide total	85,566	13,896.68	5,676	10,174.28	1,592	8,395.07	1,345	25,494.55	818	12,702.51	210	14,760.37	8	561.46

Note:

For part of Iwate, Miyagi, and Fukushima Prefectures, affected severely by the Great East Japan Earthquake, data as of the end of FY2009 are used.

3.21 Status of city parks (by prefecture) (2)

（As of the end of March, 2016）

Prefecture and major city names	Special Park								National Parks		Green buffer zones		City green zones	
	Scenic parks		Animal and plant Parks		Historical Parks		Cemetery parks							
	Numbe of parks	Area(ha)	Numbe of parks	Area(ha)	Numbe of parks	Area(ha)	Numbe of parks	Area(ha)	Numbe of parks	Area(ha)	Numbe of parks	Area(ha)	Numbe of parks	Area(ha)
Hokkaido	44	1,062.47	0	0.00	11	45.10	29	211.90	0	0.00	10	10.85	536	2,288.27
Aomori	4	42.57	0	0.00	0	0.00	12	173.96	0	0.00	0	0.00	124	134.32
Iwate	5	84.26	0	0.00	0	0.00	3	59.70	0	0.00	0	0.00	44	113.76
Miyagi	6	384.32	0	0.00	2	1.15	3	64.50	1	647.40	5	33.82	60	228.10
Akita	0	0.00	0	0.00	2	2.84	11	62.65	0	0.00	0	0.00	38	172.04
Yamagata	7	128.96	0	0.00	3	24.86	0	0.00	0	0.00	4	181.27	66	329.69
Fukushima	31	400.10	0	0.00	3	8.04	10	124.96	0	0.00	0	0.00	170	165.27
Ibaraki	17	165.05	1	8.00	9	12.53	3	9.63	1	199.50	7	132.28	159	249.44
Tochigi	4	30.33	0	0.00	4	31.75	7	53.14	0	0.00	14	42.40	102	256.03
Gunma	8	534.03	2	7.78	8	16.73	4	83.15	0	0.00	0	0.00	100	211.00
Saitama	7	42.87	1	0.63	16	35.08	1	14.00	1	304.00	48	45.18	380	919.85
Chiba	14	33.08	1	1.00	10	35.90	1	3.00	0	0.00	25	184.07	845	624.07
Tokyo	12	84.83	5	156.97	9	6.15	0	0.00	1	169.40	2	2.67	622	752.06
Kanagawa	22	192.00	4	12.90	11	38.56	2	27.63	0	0.00	1	0.19	161	296.33
Niigata	3	16.66	2	1.00	10	49.96	4	43.88	1	298.40	7	22.66	50	167.14
Toyama	9	60.00	1	0.40	8	12.44	4	31.09	0	0.00	3	44.20	95	176.81
Ishikawa	7	60.79	2	46.24	9	73.58	6	44.76	0	0.00	0	0.00	131	78.58
Fukui	4	29.39	0	0.00	2	1.10	3	12.76	0	0.00	1	134.37	19	45.86
Yamanashi	3	45.62	0	0.00	2	1.10	1	3.98	0	0.00	0	0.00	10	96.23
Nagano	13	181.30	3	48.30	4	23.66	1	47.00	1	148.00	1	0.33	98	226.91
Gifu	33	79.40	0	0.00	10	12.92	5	58.71	1	164.53	6	8.82	66	159.84
Shizuoka	29	159.26	1	11.94	12	12.74	3	7.04	0	0.00	0	0.00	103	224.63
Aichi	18	303.13	4	33.77	19	33.32	11	126.25	0	108.18	9	63.69	263	544.03
Mie	6	14.45	0	0.00	12	22.97	4	59.31	0	14.98	7	69.25	82	169.85
Shiga	8	136.54	1	0.23	2	4.28	3	17.10	0	0.00	0	0.00	49	129.70
Kyoto	18	118.84	0	0.00	6	9.66	0	0.00	0	20.40	2	33.70	100	71.72
Osaka	6	74.94	0	0.00	4	7.78	7	83.60	0	166.30	15	37.53	319	397.96
Hyogo	15	103.40	1	1.41	1	3.88	10	137.44	1	39.50	4	122.43	365	808.66
Nara	4	29.55	0	0.00	6	4.14	1	8.53	1	46.10	0	0.00	465	308.26
Wakayama	5	71.35	0	0.00	2	21.37	2	30.99	0	0.00	5	52.43	22	133.88
Tottori	1	4.60	0	0.00	4	20.28	3	20.47	0	0.00	1	0.61	21	81.07
Shimane	1	0.60	1	3.46	7	129.48	2	14.50	0	0.00	0	0.00	71	5.81
Okayama	10	252.91	1	4.85	3	10.30	3	38.56	0	0.00	4	135.25	38	71.86
Hiroshima	14	517.71	0	0.00	1	32.90	3	11.44	1	338.80	2	4.14	85	80.37
Yamaguchi	6	14.02	0	0.00	9	15.86	10	51.92	0	0.00	6	115.73	32	35.39
Tokushima	4	35.57	1	58.90	2	20.09	0	0.00	0	0.00	1	1.01	23	78.54
Kagawa	12	441.45	0	0.00	5	104.66	6	31.43	1	350.00	3	22.22	37	86.93
Ehime	12	205.01	1	8.64	7	20.00	3	21.54	0	0.00	1	0.40	123	133.48
Kochi	11	62.55	0	0.00	2	10.76	2	2.76	0	0.00	0	0.00	26	38.87
Fukuoka	23	199.51	1	5.12	10	10.59	3	18.43	0	0.00	7	5.20	89	228.30
Saga	5	52.44	0	0.00	3	2.64	0	0.00	1	51.30	3	22.20	26	53.89
Nagasaki	15	202.15	4	12.08	3	21.65	2	27.99	0	0.00	1	0.30	35	7.54
Kumamoto	9	65.28	0	0.00	5	24.15	1	3.74	0	0.00	1	5.25	44	47.24
Oita	8	21.78	1	8.58	6	51.06	0	0.00	0	0.00	5	111.14	151	117.23
Miyazaki	9	152.54	2	15.40	8	116.97	6	66.88	0	0.00	0	0.00	50	279.55
Kagoshima	15	100.53	1	29.34	4	15.85	19	40.36	0	0.00	2	1.44	19	22.92
Okinawa	4	38.72	1	12.32	3	3.47	3	15.52	1	75.00	0	0.00	52	75.68
Total of prefectures	521	7,036.86	43	489	279	1,164.30	217	1,966.20	13	3,142	213	1,647.03	6,566	11,925
Sapporo	13	154.44	0	0.00	0	0.00	0	0.00	1	395.70	1	15.48	126	600.95
Sendai	14	210.13	1	12.15	4	21.10	0	0.00	0	0.00	0	0.00	212	711.05
Saitama	0	0.00	0	0.00	1	1.74	1	27.14	0	0.00	1	0.25	34	160.11
Chiba	5	55.29	2	37.39	4	11.14	0	0.00	0	0.00	0	0.00	74	100.38
District of Tokyo	32	174.78	5	2.62	17	118.56	0	0.00	1	6.70	0	0.00	436	442.62
Yokohama	14	106.43	1	2.58	6	10.39	0	0.00	0	0.00	1	15.23	51	74.48
Kawasaki	1	11.80	1	1.24	0	0.00	2	16.13	0	0.00	0	0.00	89	42.15
Sagamihara	2	12.43	0	0.00	3	9.52	1	15.00	0	0.00	0	0.00	22	24.45
Niigata	0	0.00	2	3.33	1	0.60	0	0.00	0	0.00	1	16.10	47	129.68
Shizuoka	11	26.40	0	0.00	1	5.80	0	0.00	0	0.00	2	1.05	63	140.78
Hamamatsu	2	7.98	0	0.00	0	0.00	1	8.37	0	0.00	0	0.00	105	169.68
Nagoya	2	27.69	1	120.07	2	0.85	1	40.77	0	0.00	1	11.50	49	25.63
Kyoto	4	20.78	0	0.00	0	0.00	1	3.11	0	0.00	0	0.00	15	18.00
Osaka	2	11.49	1	26.01	2	106.66	0	0.00	1	53.50	0	0.00	2	1.44
Sakai	3	28.10	0	0.00	1	0.91	1	14.74	0	0.00	1	6.43	32	98.99
Kobe	16	194.28	1	126.00	3	4.49	3	276.90	0	0.00	0	0.00	107	429.40
Okayama	5	302.02	1	11.01	5	39.55	1	30.00	0	0.00	0	0.00	73	250.63
Hiroshima	7	59.44	1	16.20	1	4.68	2	16.60	0	0.00	0	0.00	66	63.82
Kitakyushu	20	130.22	2	10.82	0	0.00	0	0.00	0	0.00	2	25.41	74	72.58
Fukuoka	12	92.07	1	14.68	3	2.92	3	57.54	1	293.50	0	0.00	188	96.71
Kumamoto	7	42.15	0	0.00	16	30.32	3	17.80	0	0.00	0	0.00	51	82.17
Total of major cities	172	1,667.92	20	384.10	70	369.23	20	524.10	4	749.40	10	91.45	1,916	3,735.70
Nation wide total	693	8,704.78	63	873.36	349	1,533.53	237	2,490.30	17	3,891.19	223	1,738.48	8,482	15,660.66

Note:

For part of Iwate, Miyagi, and Fukushima Prefectures, affected severely by the Great East Japan Earthquake, data as of the end of FY2009 are used.

3.21 Status of city parks (by prefecture) (3)

(As of the end of March, 2016)

Prefecture and major city names	Urban forests		Square parks		Green Roads		Total of city parks		Urban planning population (1,000 people)	Park area per person (㎡ / person)
	Locations	Area(ha)	Locations	Area(ha)	Locations	Area(ha)	Locations	Area(ha)		
Hokkaido	5	26.67	18	5.07	12	39.52	4,863	11,349.53	2,928	38.76
Aomori	0	0.00	16	2.61	7	21.47	854	2,021.01	1,132	17.85
Iwate	0	0.00	0	0.00	1	2.19	1,203	1,432.93	1,012	14.16
Miyagi	1	0.60	0	0.00	16	6.92	1,213	2,333.76	1,007	23.18
Akita	0	0.00	11	4.85	3	3.22	582	1,554.88	782	19.88
Yamagata	0	0.00	19	1.47	1	0.81	837	1,845.64	932	19.80
Fukushima	0	0.00	0	0.00	21	11.34	1,133	2,231.62	1,748	12.77
Ibaraki	0	0.00	8	4.10	13	6.81	1,977	2,676.51	2,845	9.41
Tochigi	0	0.00	7	1.13	9	1.58	2,141	2,740.10	1,922	14.26
Gunma	0	0.00	0	0.00	7	9.38	1,449	2,555.53	1,814	14.09
Saitama	3	58.83	2	0.31	159	43.97	4,166	4,321.34	5,976	7.23
Chiba	0	0.00	3	0.49	71	80.44	5,777	3,177.17	5,090	6.24
Tokyo	3	0.94	14	24.93	30	24.05	3,880	3,076.62	4,200	7.33
Kanagawa	92	203.05	4	0.78	23	18.02	3,054	2,197.93	3,200	6.87
Niigata	0	0.00	3	0.80	7	8.53	963	2,172.35	1,295	16.77
Toyama	0	0.00	2	0.16	5	5.04	1,978	1,609.79	1,058	15.22
Ishikawa	0	0.00	6	0.66	7	7.58	1,114	1,510.91	1,039	14.54
Fukui	0	0.00	4	0.24	1	2.50	910	1,177.19	713	16.51
Yamanashi	0	0.00	1	0.48	0	0.00	203	786.17	730	10.77
Nagano	0	0.00	4	0.53	0	0.00	956	2,513.00	1,864	13.48
Gifu	1	5.94	4	0.67	1	0.82	1,406	1,944.99	1,863	10.44
Shizuoka	0	0.00	2	0.12	17	13.30	1,417	2,019.87	2,149	9.40
Aichi	3	5.79	28	3.48	49	135.91	3,184	4,101.18	5,139	7.98
Mie	0	0.00	1	0.11	5	2.57	2,691	1,659.71	1,645	10.09
Shiga	0	0.00	0	0.00	4	0.89	597	1,252.02	1,388	9.02
Kyoto	0	0.00	4	1.95	12	3.64	1,433	1,256.48	1,046	12.01
Osaka	0	0.00	0	0.00	11	13.54	4,141	2,975.16	5,313	5.60
Hyogo	1	0.25	4	0.35	24	23.33	4,252	4,174.64	3,840	10.87
Nara	0	0.00	1	0.39	67	3.91	2,371	1,729.62	1,351	12.80
Wakayama	0	0.00	3	1.97	0	0.00	280	694.53	839	8.28
Tottori	1	28.77	4	1.19	1	1.24	312	649.79	468	13.88
Shimane	1	38.96	17	15.76	3	4.15	402	1,057.17	542	19.50
Okayama	1	220.20	6	31.09	14	11.02	1,126	1,541.13	989	15.58
Hiroshima	0	0.00	1	0.35	2	0.60	1,942	2,040.67	1,448	14.09
Yamaguchi	0	0.00	3	0.98	2	2.55	1,129	1,873.08	1,292	14.50
Tokushima	0	0.00	0	0.00	0	0.00	262	536.58	575	9.33
Kagawa	0	0.00	8	1.74	6	3.54	488	1,561.63	853	18.31
Ehime	0	0.00	9	2.68	1	1.37	595	1,499.28	1,236	12.13
Kochi	0	0.00	0	0.00	0	0.00	834	689.13	599	11.50
Fukuoka	1	2.21	1	0.14	43	29.00	2,626	2,120.70	2,370	8.95
Saga	0	0.00	0	0.00	2	1.08	258	817.77	719	11.37
Nagasaki	1	15.22	0	0.00	2	1.37	1,185	1,408.79	1,102	12.78
Kumamoto	0	0.00	6	2.33	0	0.00	702	733.47	669	10.96
Oita	0	0.00	2	1.34	18	22.80	1,106	1,201.34	961	12.50
Miyazaki	0	0.00	0	0.00	6	7.52	988	1,970.56	940	20.96
Kagoshima	0	0.00	1	4.00	3	15.70	1,268	1,882.06	1,384	13.60
Okinawa	0	0.00	2	1.39	1	1.69	781	1,464.71	1,365	10.73
Total of prefectures	114	607	229	120.64	687	594.91	77,029	98140.04	83,372	11.77
Sapporo	0	0.00	0	0.00	7	17.98	2,729	2,466.80	1,959	12.59
Sendai	0	0.00	1	1.10	6	4.65	1,743	1,520.93	1,040	14.62
Saitama	0	0.00	4	1.32	29	13.44	934	646.24	1,263	5.12
Chiba	0	0.00	16	4.36	2	0.59	1,073	901.32	964	9.35
District of Tokyo	4	0.38	7	0.98	45	39.12	4,219	2,757.53	9,234	2.99
Yokohama	0	0.00	5	0.79	21	45.15	2,658	1,813.13	3,689	4.91
Kawasaki	25	38.38	1	0.11	19	7.55	1,119	571.03	1,481	3.86
Sagamihara	0	0.00	1	0.25	6	12.79	608	331.77	718	4.62
Niigata	0	0.00	0	0.00	8	2.33	1,383	811.51	799	10.16
Shizuoka	0	0.00	0	0.00	1	0.27	493	426.66	691	6.17
Hamamatsu	0	0.00	0	0.00	5	1.26	560	638.38	783	8.15
Nagoya	0	0.00	2	0.17	13	20.30	1,461	1,589.18	2,295	6.92
Kyoto	1	133.98	1	0.18	11	23.68	911	640.42	1,466	4.37
Osaka	0	0.00	0	0.00	13	9.63	987	958.46	2,695	3.56
Sakai	1	17.19	0	0.00	11	55.44	1,171	701.21	838	8.37
Kobe	0	0.00	19	4.49	6	10.56	1,632	2,636.47	1,537	17.15
Okayama	0	0.00	0	0.00	9	15.91	466	1,143.58	692	16.53
Hiroshima	0	0.00	0	0.00	7	19.06	1,128	899.44	1,155	7.79
Kitakyushu	1	0.47	17	3.09	12	10.57	1,707	1,174.85	957	12.28
Fukuoka	0	0.00	0	0.00	25	22.08	1,676	1,284.71	1,463	8.78
Kumamoto	0	0.00	0	0.00	1	0.24	985	686.41	734	9.35
Total of major cities	32	190.40	74	16.84	257	332.60	29,643	24,600.03	36,453	6.75
Nationwide total	146	797.83	303	137.48	944	927.51	106,672	122,740.07	119,825	10.24

Note:

For part of Iwate, Miyagi, and Fukushima Prefectures, affected severely by the Great East Japan Earthquake, data as of the end of FY2009 are

Source: "Report of City Park Development Status by Prefcture", Ministry of Land, Infrastructure,Transport and Tourism (as of March 2016)

3.22 Changes in the total length of nationwide Coastline

（Unit: km）

Survey	Natural	Semi-natural	Man-made	Estuary	Total
1996 ※ (5th Survey)	17,660.33	4,385.07	11,212.22	316.19	33,573.81
1993 (4th survey)	18,105.65	4,467.49	9,941.78	263.96	32,778.88
1984 (3rd survey)	18,402.08	4,511.44	9,294.54	263.79	32,471.85
1978 (2nd survey)	18,967.17	4,340.36	8,598.95	263.73	32,170.21

Note:
In 1996, the survey for Hyogo pref. was not conducted, therefore, the data for 1993 were shown instead.

Source: "Basic Survey of the Natural Environment 5th [coastal area survey]," Ministry of the Environment

3.23 Alteration of Lake Shorelines

Actual number : Lake shoreline (km)
( ) : Composition ratio (%)

Survey	# of lakes	All	Natural	Semi-natural	Artificial	Water surface
1979 (Part 2)	476	3,142.0 (100.0)	1,879.9 (59.8)	322.2 (10.3)	918.8 (29.2)	21.1 (0.7)
1985 (Part 3)	476	3,168.4 (100.0)	1,862.9 (58.8)	375.0 (11.8)	909.6 (28.7)	20.9 (0.7)
1991 (Part 4)	476	3,183.4 (100.0)	1,803.0 (56.6)	393.7 (12.4)	965.2 (30.3)	21.5 (0.7)
Changes between 1979 ~ 1985		*26.4	▼17.0	52.8	▼9.2	▼0.2
Changes between 1985 ~ 1991		*15.0	▼59.9	18.7	55.6	0.6

Notes:
・The shoreline difference for each fiscal year (*) were caused by the topographical changes of the shoreline.
・The composition ratios are rounded off to the first decimal digit; the sum may not match 100.
・" ▼" means a decrease.

Source: "Basic Survey of the Natural Environment 4th 'lakeshore survey'," Ministry of the Environment

3.24 Total length of the coast by prefecture

As of the end of March, 2016（Unit：m）

	Total length of Coastline	Length of coastline required conservation	Extension of required coastal conservation area	Under the jurisdiction of Water and Disaster Management Bureau, Erosion and Sediment Control Department, Land Conservation Division								Total
				Protected forest	Shore protected for railway	Shore protected for road	Airport	Estuary	Natural coast	Others		
										Public facilities	Private facilities	
Total	35,649,013	15,331,009	14,550,149	797,345	49,404	346,218	27,741	99,409	2,334,942	139,987	101,704	3,896,750
Hokkaido	4,460,605	1,910,282	1,767,520	456	11,757	54,637	0	25,758	0	1,153	1,550	95,311
Aomori	796,480	455,867	411,942	3,109	2,214	1,500	0	3,388	60,864	0	745	71,820
Iwate	710,780	127,674	112,929	231,822	0	765	0	804	108,690	150	290	342,521
Miyagi	829,868	296,381	279,882	166,087	2,370	6,450	0	1,305	0	0	0	176,212
Akita	264,220	188,878	177,725	0	0	0	0	862	25,459	0	0	26,321
Yamagata	134,596	72,242	71,982	0	210	6,816	0	535	0	0	0	7,561
Fukushima	166,550	112,110	110,560	2,994	0	0	0	2,654	3,684	0	10,629	19,961
Ibaraki	195,142	132,505	128,235	0	0	0	0	309	0	0	0	309
Chiba	534,422	311,048	304,694	0	0	0	0	681	0	0	0	681
Tokyo	762,931	180,139	170,089	0	0	0	0	1,048	0	0	0	1,048
Kanagawa	431,745	133,304	130,548	0	0	1,910	0	1,881	0	2,140	2,475	8,406
Niigata	634,960	367,639	364,950	335	1,135	12,603	0	2,217	4,361	769	2,242	23,662
Toyama	147,394	91,947	85,904	0	0	0	0	1,429	0	0	0	1,429
Ishikawa	583,684	417,384	373,036	0	0	8,663	0	430	0	1,512	0	10,605
Shizuoka	518,312	296,160	282,804	0	0	0	0	7,441	1,610	5,321	4,610	18,982
Aichi	669,423	504,653	504,653	0	0	0	7,992	516	2,933	296	0	11,737
Mie	1,140,150	576,783	576,783	0	0	0	0	5,319	0	0	0	5,319
Fukui	415,100	150,660	136,158	0	0	0	0	1,208	0	0	0	1,208
Kyoto	315,235	109,704	108,954	0	0	0	0	400	0	0	0	400
Osaka	240,551	149,614	121,406	0	0	0	4,880	1,005	3,762	1,255	53,877	64,779
Hyogo	850,499	464,771	427,209	38,360	0	0	0	804	148,234	2,015	0	189,413
Wakayama	651,425	244,118	231,620	29,150	6,762	26,816	0	820	0	19,290	0	82,838
Tottori	133,348	96,782	92,083	0	0	0	0	1,660	0	0	0	1,660
Shimane	1,026,906	155,578	155,578	0	1,115	1,447	0	1,401	0	843	0	4,806
Okayama	541,955	253,516	219,891	0	0	2,677	0	86	52,481	19,038	6,347	80,629
Hiroshima	1,128,401	729,556	580,175	0	0	2,170	0	0	6,177	375	400	9,122
Yamaguchi	1,580,060	690,010	678,701	124,846	4,160	29,403	0	39	0	1,855	0	160,303
Tokushima	392,562	159,976	159,976	0	0	824	990	1,560	0	0	0	3,374
Kagawa	737,272	323,388	277,961	62,685	140	4,551	0	3,977	28,207	11,249	92	110,901
Ehime	1,716,426	1,231,537	1,200,549	0	0	6,171	0	0	0	1,195	131	7,497
Kochi	717,872	290,188	290,188	0	0	0	0	2,263	0	0	0	2,263
Fukuoka	691,969	325,308	314,442	2,455	417	670	1,398	82	87	1,100	0	6,209
Saga	383,527	214,718	199,812	0	7,311	0	0	3,568	0	0	2,012	12,891
Nagasaki	4,183,357	1,382,280	1,380,570	31,609	6,890	6,125	0	1,165	1,888,393	43,373	4,000	1,981,555
Kumamoto	1,077,799	611,025	602,072	0	1,270	16,900	0	9,891	0	0	0	28,061
Oita	774,175	343,714	330,859	77,837	253	13,020	0	237	0	11,999	390	103,736
Miyazaki	405,955	126,752	105,543	0	0	9,050	0	5,010	0	0	0	14,060
Kagoshima	2,665,649	645,566	640,127	25,600	3,400	97,608	2,200	4,128	0	0	0	132,936
Okinawa	2,037,408	457,252	442,039	0	0	35,442	10,281	3,528	0	15,059	11,914	76,224

Note:

"Total length of coastline" includes 212,291 m of Estuary, and the breakdown of "1,369,350 m of Others" is as follows: 1,347,800 m of the Northern Territories; and 21,550 m of the Senkaku Islands.

Source: "Statistics of Coastline 2016," Ministry of Land, Infrastructure, Transport and Tourism

3.25 Distribution of Extant Tidal flats (by sea area) (1)

(Unit: ha)

Code / Sea area	Extant tidal flats										Total (A)
	Foreshore		Estuary		Seashore lake		Man-made tidal flat		Others (including combined)		
	Area	Ratio for (A)	Area	Ratio for (A)	Area	Ratio for (A)	Area	Ratio for (A)	Area	Ratio for (A)	Area
101 Soya	26.5	100.00%	0.0	0.00%	0.0	0.00%	0.0	0.00%	0.0	0.00%	26.5
102 Abashiri	0.0	-	0.0	-	0.0	-	0.0	-	0.0	-	0.0
103 Nemuro	459.0	43.76%	84.0	8.01%	497.0	47.38%	9.0	0.86%	0.0	0.00%	1,049.0
104 Kushiro	0.0	-	0.0	-	0.0	-	0.0	-	0.0	-	0.0
105 Tokachi	0.0	-	0.0	-	0.0	-	0.0	-	0.0	-	0.0
106 Hidaka	0.0	-	0.0	-	0.0	-	0.0	-	0.0	-	0.0
107 Iburi	0.0	0.00%	12.4	100.00%	0.0	0.00%	0.0	0.00%	0.0	0.00%	12.4
108 Oshima	0.0	-	0.0	-	0.0	-	0.0	-	0.0	-	0.0
109 Hiyama	0.0	-	0.0	-	0.0	-	0.0	-	0.0	-	0.0
110 Shiribe	0.0	-	0.0	-	0.0	-	0.0	-	0.0	-	0.0
111 Ishikari	0.0	-	0.0	-	0.0	-	0.0	-	0.0	-	0.0
112 Rumoi	0.0	-	0.0	-	0.0	-	0.0	-	0.0	-	0.0
201 Aomori	0.0	-	0.0	-	0.0	-	0.0	-	0.0	-	0.0
202 Akita	0.0	-	0.0	-	0.0	-	0.0	-	0.0	-	0.0
203 Yamagata	0.0	-	0.0	-	0.0	-	0.0	-	0.0	-	0.0
204 Niigata	0.0	-	0.0	-	0.0	-	0.0	-	0.0	-	0.0
205 Sado	0.0	-	0.0	-	0.0	-	0.0	-	0.0	-	0.0
206 Toyama Bay	0.0	-	0.0	-	0.0	-	0.0	-	0.0	-	0.0
207 Noto Peninsula	0.0	-	0.0	-	0.0	-	0.0	-	0.0	-	0.0
301 Mutsu Bay	36.4	39.35%	56.1	60.65%	0.0	0.00%	0.0	0.00%	0.0	0.00%	92.5
302 Tsugaru Channel	0.0	-	0.0	-	0.0	-	0.0	-	0.0	-	0.0
303 Shimokita Peninsula East	0.0	-	0.0	-	0.0	-	0.0	-	0.0	-	0.0
304 Sanriku Coast	2.7	13.11%	17.9	86.89%	0.0	0.00%	0.0	0.00%	0.0	0.00%	20.6
305 Miyagi Sanriku Coast	0.0	-	0.0	-	0.0	-	0.0	-	0.0	-	0.0
306 Sendai Bay	0.0	0.00%	28.8	100.00%	0.0	0.00%	0.0	0.00%	0.0	0.00%	28.8
307 Fukushima	0.0	0.00%	0.0	0.00%	700.0	100.00%	0.0	0.00%	0.0	0.00%	700.0
308 Kashimanada	567.0	99.65%	2.0	0.35%	0.0	0.00%	0.0	0.00%	0.0	0.00%	569.0
401 Wakasa Bay	0.0	-	0.0	-	0.0	-	0.0	-	0.0	-	0.0
403 Tottori	10.0	25.00%	0.0	0.00%	0.0	0.00%	30.0	75.00%	0.0	0.00%	40.0
404 Shimane	0.0	-	0.0	-	0.0	-	0.0	-	0.0	-	0.0
405 Kita Nagato	0.0	-	0.0	-	0.0	-	0.0	-	0.0	-	0.0
406 Oki	0.0	-	0.0	-	0.0	-	0.0	-	0.0	-	0.0
501 Boso	70.1	57.13%	29.5	24.04%	8.1	6.60%	0.0	0.00%	15.0	12.22%	122.7
502 Tokyo Bay	1,644.1	94.84%	31.2	1.80%	0.0	0.00%	16.0	0.92%	42.2	2.43%	1,733.5
503 Sagami Bay	15.0	62.50%	9.0	37.50%	0.0	0.00%	0.0	0.00%	0.0	0.00%	24.0
504 Izu	0.0	-	0.0	-	0.0	-	0.0	-	0.0	-	0.0
505 Suruga Bay	0.0	-	0.0	-	0.0	-	0.0	-	0.0	-	0.0
506 Enshunada	0.0	0.00%	12.0	100.00%	0.0	0.00%	0.0	0.00%	0.0	0.00%	12.0
507 Ise Bay	396.6	28.84%	878.2	63.86%	22.0	1.60%	40.0	2.91%	38.5	2.80%	1,375.3
508 Mikawa Bay	740.6	48.54%	725.6	47.56%	0.0	0.00%	59.4	3.89%	0.0	0.00%	1,525.6
509 Kumanonada	30.8	29.39%	74.0	70.61%	0.0	0.00%	0.0	0.00%	0.0	0.00%	104.8
510 Izu Seven Islands North	0.0	-	0.0	-	0.0	-	0.0	-	0.0	-	0.0
511 Izu Seven Islands South	0.0	-	0.0	-	0.0	-	0.0	-	0.0	-	0.0
530 Ogasawara Islands	0.0	-	0.0	-	0.0	-	0.0	-	0.0	-	0.0
550 Volcano Islands	0.0	-	0.0	-	0.0	-	0.0	-	0.0	-	0.0
601 Wakayama	0.0	0.00%	0.0	0.00%	27.0	100.00%	0.0	0.00%	0.0	0.00%	27.0
603 Tosa Bay	20.5	23.46%	66.9	76.54%	0.0	0.00%	0.0	0.00%	0.0	0.00%	87.4
604 Hyuganada	11.5	1.88%	586.0	95.77%	14.4	2.35%	0.0	0.00%	0.0	0.00%	611.9
701 Suonada West	4,679.8	71.64%	1,471.8	22.53%	0.0	0.00%	0.0	0.00%	380.8	5.83%	6,532.4
702 Suonada East	686.2	81.64%	154.3	18.36%	0.0	0.00%	0.0	0.00%	0.0	0.00%	840.5
703 Iyonada West	92.1	100.00%	0.0	0.00%	0.0	0.00%	0.0	0.00%	0.0	0.00%	92.1
704 Beppu Bay	381.4	87.00%	57.0	13.00%	0.0	0.00%	0.0	0.00%	0.0	0.00%	438.4
705 Bungo Channel	0.0	0.00%	93.7	100.00%	0.0	0.00%	0.0	0.00%	0.0	0.00%	93.7
706 Iyonada West	22.7	32.76%	46.6	67.24%	0.0	0.00%	0.0	0.00%	0.0	0.00%	69.3
707 Hiroshima Bay	271.4	61.35%	171.0	38.65%	0.0	0.00%	0.0	0.00%	0.0	0.00%	442.4
708 Aki Bay	157.5	58.31%	112.6	41.69%	0.0	0.00%	0.0	0.00%	0.0	0.00%	270.1
709 Bingonada	669.7	76.39%	204.0	23.27%	0.0	0.00%	3.0	0.34%	0.0	0.00%	876.7
710 Hiuchinada	367.8	37.68%	608.4	62.32%	0.0	0.00%	0.0	0.00%	0.0	0.00%	976.2
711 Bisan Seto West	212.1	44.86%	201.4	42.60%	0.0	0.00%	0.0	0.00%	59.3	12.54%	472.8
712 Bisan Seto East	229.7	61.55%	143.5	38.45%	0.0	0.00%	0.0	0.00%	0.0	0.00%	373.2
713 Harimanada North	77.0	95.30%	3.8	4.70%	0.0	0.00%	0.0	0.00%	0.0	0.00%	80.8
714 Harimanada South	5.0	31.85%	10.7	68.15%	0.0	0.00%	0.0	0.00%	0.0	0.00%	15.7
715 Osaka Bay North	0.0	0.00%	57.4	100.00%	0.0	0.00%	0.0	0.00%	0.0	0.00%	57.4
716 Osaka Bay South	8.7	40.47%	12.8	59.53%	0.0	0.00%	0.0	0.00%	0.0	0.00%	21.5
718 Kii Channel East	22.0	38.60%	0.0	0.00%	35.0	61.40%	0.0	0.00%	0.0	0.00%	57.0
801 Hibikinada	33.6	43.02%	44.5	56.98%	0.0	0.00%	0.0	0.00%	0.0	0.00%	78.1
802 Hakata Bay	32.4	12.66%	142.4	55.65%	0.0	0.00%	0.0	0.00%	81.1	31.69%	255.9
803 Karatsu Imari	529.6	80.05%	132.0	19.95%	0.0	0.00%	0.0	0.00%	0.0	0.00%	661.6
804 Omura Bay	271.4	58.99%	180.3	39.19%	0.0	0.00%	0.0	0.00%	8.4	1.83%	460.1
805 Nagasaki	161.8	72.88%	59.7	26.89%	0.5	0.23%	0.0	0.00%	0.0	0.00%	222.0
806 Amakusanada	390.6	90.77%	38.7	8.99%	1.0	0.23%	0.0	0.00%	0.0	0.00%	430.3
807 The Sea of Ariake	12,934.8	63.43%	7,208.6	35.35%	0.0	0.00%	0.0	0.00%	247.3	1.21%	20,390.7
808 Yatsushirokai Sea	3,631.0	88.94%	451.5	11.06%	0.0	0.00%	0.0	0.00%	0.0	0.00%	4,082.5

Notes:

・As of March, 1998.

・For Hyogo and Tokushima, the survey has not been conducted yet. In addition, “0.0 ha” means “0 ha”.

3.25 Distribution of Extant Tidal flats (by sea area) (2)

Code / Sea area	Extant tidal flats										Total (A)
	Foreshore		Estuary		Seashore lake		Man-made tidal flat		Others (including combined)		
	Area	Ratio for (A)	Area	Ratio for (A)	Area	Ratio for (A)	Area	Ratio for (A)	Area	Ratio for (A)	Area
809 Satsuma	72.0	93.26%	5.2	6.74%	0.0	0.00%	0.0	0.00%	0.0	0.00%	77.2
810 Kagoshima Bay	91.6	47.66%	100.6	52.34%	0.0	0.00%	0.0	0.00%	0.0	0.00%	192.2
811 Okuma	0.0	0.00%	34.1	100.00%	0.0	0.00%	0.0	0.00%	0.0	0.00%	34.1
812 Tsushima	2.9	8.12%	32.8	91.88%	0.0	0.00%	0.0	0.00%	0.0	0.00%	35.7
813 Goto	76.4	60.54%	49.8	39.46%	0.0	0.00%	0.0	0.00%	0.0	0.00%	126.2
814 Osumi islands	22.2	100.00%	0.0	0.00%	0.0	0.00%	0.0	0.00%	0.0	0.00%	22.2
820 Tokara Islands	0.0	-	0.0	-	0.0	-	0.0	-	0.0	-	0.0
830 Amami Islands	110.1	81.98%	24.2	18.02%	0.0	0.00%	0.0	0.00%	0.0	0.00%	134.3
850 Okinawa Island	909.5	75.60%	293.5	24.40%	0.0	0.00%	0.0	0.00%	0.0	0.00%	1,203.0
870 Miyako Islands	173.0	67.32%	84.0	32.68%	0.0	0.00%	0.0	0.00%	0.0	0.00%	257.0
880 Yaeyama Islands	143.0	16.94%	671.0	79.50%	30.0	3.55%	0.0	0.00%	0.0	0.00%	844.0
890 Senkaku Isalnds	0.0	-	0.0	-	0.0	-	0.0	-	0.0	-	0.0
895 Daito Islands	0.0	-	0.0	-	0.0	-	0.0	-	0.0	-	0.0
Total	31,499.8	63.79%	15,515.5	31.42%	1,335.0	2.70%	157.4	0.32	872.6	1.77%	49,380.3

Notes:
・As of March, 1998.
・For Hyogo and Tokushima, the survey has not been conducted yet. In addition, “0.0 ha” means “0 ha”.

Source: "National Survey on the Natural Environment 5th [coastal area survey]," Ministry of the Environment

3.26 Change in Nationwide tidal flats area

	Before 1945	1978	1994	1998
Area (ha)	82,621	53,856	51,443	49,573

Note:
For Hyogo and Tokushima prefectures, the 5th survey were not conducted in 1998, thus the data for 1994 are used.

Source : "National Survey on the Natural Environment 5th [environmental survey of marine organisms]," "National Survey on the Natural Environment 5th [coastal area survey]," Ministry of the Environment

3.27 Distribution of Extant Sea Grass Beds (by sea area) (1)

(Unit: ha)

Code / Sea area	Extant sea grass bed																		Total
	Sea grass beds		Sargassum beds		Kombu beds		Arame, Kajime beds		Wakame beds		Ceylon moss beds		Sea lettuce, Green Laver beds		Others (including combined)		Unknown		
	Area	%	Area	%	Area	%	Area	%	Area	%	Area	%	Area	%	Area	%	Area	%	
101 Soya	1,304.9	25.1%	60.7	1.2%	3,828.5	73.7%	0.0	0.0%	0.0	0.0%	0.0	0.0%	0.0	0.0%	0.0	0.0%	0.0	0.0%	5,194.1
102 Abashiri	575.0	29.3%	0.0	0.0%	1,385.7	70.7%	0.0	0.0%	0.0	0.0%	0.0	0.0%	0.0	0.0%	0.0	0.0%	0.0	0.0%	1,960.7
103 Nemuro	5,606.3	67.4%	315.6	3.8%	2,229.1	26.8%	0.0	0.0%	0.0	0.0%	0.0	0.0%	0.0	0.0%	165.2	2.0%	0.0	0.0%	8,316.2
104 Kushiro	0.0	0.0%	0.0	0.0%	3,565.4	100.0%	0.0	0.0%	0.0	0.0%	0.0	0.0%	0.0	0.0%	0.0	0.0%	0.0	0.0%	3,565.4
105 Tokachi	0.0	0.0%	0.0	0.0%	216.0	100.0%	0.0	0.0%	0.0	0.0%	0.0	0.0%	0.0	0.0%	0.0	0.0%	0.0	0.0%	216.0
106 Hidaka	0.0	0.0%	0.0	0.0%	0.0	0.0%	0.0	0.0%	0.0	0.0%	0.0	0.0%	0.0	0.0%	2,750.2	100.0%	0.0	0.0%	2,750.2
107 Iburi	0.0	0.0%	0.0	0.0%	450.2	84.6%	0.0	0.0%	81.9	15.4%	0.0	0.0%	0.0	0.0%	0.0	0.0%	0.0	0.0%	532.1
108 Oshima	194.0	7.2%	99.0	3.7%	1,182.0	44.1%	0.0	0.0%	207.0	7.7%	7.0	0.3%	0.0	0.0%	990.0	37.0%	0.0	0.0%	2,679.0
109 Hiyama	0.0	0.0%	0.0	0.0%	3,248.0	91.2%	0.0	0.0%	313.0	8.8%	0.0	0.0%	0.0	0.0%	0.0	0.0%	0.0	0.0%	3,561.0
110 Shiribeshi	75.0	6.5%	47.0	4.1%	152.0	13.3%	0.0	0.0%	834.9	72.9%	0.0	0.0%	30.0	2.6%	7.0	0.6%	0.0	0.0%	1,145.9
111 Ishikari	0.0	0.0%	0.0	0.0%	154.0	26.3%	0.0	0.0%	0.0	0.0%	0.0	0.0%	320.0	54.7%	111.0	19.0%	0.0	0.0%	585.0
112 Rumoi	0.0	0.0%	27.0	2.0%	1,289.0	94.1%	0.0	0.0%	0.0	0.0%	0.0	0.0%	0.0	0.0%	54.0	3.9%	0.0	0.0%	1,370.0
201 Aomori	0.0	0.0%	14.8	0.7%	0.0	0.0%	0.0	0.0%	0.0	0.0%	0.0	0.0%	0.0	0.0%	2,075.6	99.3%	0.0	0.0%	2,090.4
202 Akita	0.0	0.0%	0.0	0.0%	0.0	0.0%	0.0	0.0%	0.0	0.0%	0.0	0.0%	0.0	0.0%	3,114.0	100.0%	0.0	0.0%	3,114.0
203 Yamagata	0.0	0.0%	194.5	61.5%	0.0	0.0%	0.0	0.0%	0.0	0.0%	0.0	0.0%	0.0	0.0%	121.6	38.5%	0.0	0.0%	316.1
204 Niigata	0.0	0.0%	2,195.1	87.0%	0.0	0.0%	0.0	0.0%	0.0	0.0%	0.0	0.0%	122.8	4.9%	206.3	8.2%	0.0	0.0%	2,524.2
205 Sado	972.1	19.8%	3,079.7	62.8%	0.0	0.0%	339.3	6.9%	0.0	0.0%	0.0	0.0%	0.0	0.0%	514.7	10.5%	0.0	0.0%	4,905.8
206 Toyama Bay	0.0	0.0%	5.0	0.6%	0.0	0.0%	0.0	0.0%	0.0	0.0%	0.0	0.0%	0.0	0.0%	819.0	99.4%	0.0	0.0%	824.0
207 Noto Peninsula	2,803.6	29.8%	5,576.2	59.2%	0.0	0.0%	0.0	0.0%	0.0	0.0%	0.0	0.0%	0.0	0.0%	1,043.7	11.1%	0.0	0.0%	9,423.5
301 Mutsu Bay	1,815.5	68.1%	134.8	5.1%	0.0	0.0%	0.0	0.0%	0.0	0.0%	0.0	0.0%	0.0	0.0%	716.1	26.9%	0.0	0.0%	2,666.4
302 Tsugaru Channel	344.6	13.2%	391.1	15.0%	1,274.3	48.9%	388.7	14.9%	92.0	3.5%	0.0	0.0%	0.0	0.0%	117.4	4.5%	0.0	0.0%	2,608.1
303 Shimokita Peninsula East	0.0	0.0%	0.0	0.0%	256.2	48.9%	0.0	0.0%	27.6	5.3%	0.0	0.0%	0.0	0.0%	239.8	45.8%	0.0	0.0%	523.6
304 Sanriku Coast	297.8	10.8%	41.6	1.5%	959.0	34.7%	64.1	2.3%	1,401.3	50.7%	0.0	0.0%	0.0	0.0%	0.0	0.0%	0.0	0.0%	2,763.8
305 Miyagi Sanriku Coast	40.8	2.1%	91.1	4.6%	166.0	8.4%	258.0	13.1%	48.9	2.5%	9.5	0.5%	5.1	0.3%	1,353.3	68.6%	0.0	0.0%	1,972.7
306 Sendai Bay	878.4	45.1%	124.5	6.4%	0.0	0.0%	65.5	3.4%	82.6	4.2%	0.0	0.0%	0.0	0.0%	783.0	40.2%	12.0	0.6%	1,946.0
307 Fukushima	0.0	0.0%	0.0	0.0%	0.0	0.0%	298.0	100.0%	0.0	0.0%	0.0	0.0%	0.0	0.0%	0.0	0.0%	0.0	0.0%	298.0
308 Kashimanada	0.0	0.0%	49.0	22.6%	0.0	0.0%	41.0	18.9%	0.0	0.0%	0.0	0.0%	0.0	0.0%	127.0	58.5%	0.0	0.0%	217.0
401 Wakasa Bay	132.0	5.6%	114.0	4.9%	0.0	0.0%	0.0	0.0%	8.0	0.3%	3.0	0.1%	0.0	0.0%	2,091.2	89.1%	0.0	0.0%	2,348.2
403 Tottori	0.0	0.0%	1,761.0	100.0%	0.0	0.0%	0.0	0.0%	0.0	0.0%	0.0	0.0%	0.0	0.0%	0.0	0.0%	0.0	0.0%	1,761.0
404 Shimane	55.0	2.0%	2,756.7	98.0%	0.0	0.0%	0.0	0.0%	0.0	0.0%	0.0	0.0%	0.0	0.0%	0.0	0.0%	0.0	0.0%	2,811.7
405 Kita Nagato	1.3	0.1%	33.5	1.6%	0.0	0.0%	0.0	0.0%	0.0	0.0%	0.0	0.0%	0.0	0.0%	2,022.0	98.3%	0.0	0.0%	2,056.8
406 Oki	203.2	13.6%	1,283.8	85.9%	0.0	0.0%	0.0	0.0%	0.0	0.0%	0.0	0.0%	0.0	0.0%	8.2	0.5%	0.0	0.0%	1,495.2
501 Boso	0.0	0.0%	181.5	20.4%	0.0	0.0%	295.0	33.2%	0.0	0.0%	0.0	0.0%	0.0	0.0%	412.2	46.4%	0.0	0.0%	888.7
502 Tokyo Bay	264.0	18.5%	58.0	4.1%	0.0	0.0%	1,014.0	71.0%	0.0	0.0%	0.0	0.0%	0.0	0.0%	91.6	6.4%	0.0	0.0%	1,427.6
503 Sagami Bay	45.0	1.6%	18.0	0.6%	0.0	0.0%	2,717.0	94.8%	0.0	0.0%	85.0	3.0%	0.0	0.0%	0.0	0.0%	0.0	0.0%	2,865.0
504 Izu	3.0	0.1%	0.0	0.0%	0.0	0.0%	0.0	0.0%	0.0	0.0%	662.0	13.7%	0.0	0.0%	4,178.0	86.3%	0.0	0.0%	4,843.0
505 Suruga Bay	0.0	0.0%	0.0	0.0%	0.0	0.0%	80.0	2.6%	0.0	0.0%	0.0	0.0%	0.0	0.0%	2,983.0	97.4%	0.0	0.0%	3,063.0
506 Enshunada	0.0	0.0%	0.0	0.0%	0.0	0.0%	82.8	100.0%	0.0	0.0%	0.0	0.0%	0.0	0.0%	0.0	0.0%	0.0	0.0%	82.8
507 Ise Bay	203.2	11.9%	131.8	7.7%	0.0	0.0%	133.1	7.8%	438.0	25.6%	4.5	0.3%	0.0	0.0%	798.0	46.7%	0.0	0.0%	1,708.6
508 Mikawa Bay	340.6	59.8%	221.5	38.9%	0.0	0.0%	7.5	1.3%	0.0	0.0%	0.0	0.0%	0.0	0.0%	0.0	0.0%	0.0	0.0%	569.6
509 Kumanonada	84.0	1.5%	501.8	9.0%	0.0	0.0%	186.9	3.3%	22.6	0.4%	155.2	2.8%	0.0	0.0%	4,633.9	83.0%	0.0	0.0%	5,584.4
510 Izu Seven Islands North	0.0	0.0%	36.0	12.7%	0.0	0.0%	0.0	0.0%	0.0	0.0%	179.5	63.4%	0.0	0.0%	67.5	23.9%	0.0	0.0%	283.0
511 Izu Seven Islands South	0.0	0.0%	247.0	48.3%	0.0	0.0%	0.0	0.0%	0.0	0.0%	205.0	40.1%	0.0	0.0%	59.0	11.5%	0.0	0.0%	511.0
530 Ogasawara Islands	0.0	-	0.0	-	0.0	-	0.0	-	0.0	-	0.0	-	0.0	-	0.0	-	0.0	-	0.0
550 Volcano Islands	0.0	-	0.0	-	0.0	-	0.0	-	0.0	-	0.0	-	0.0	-	0.0	-	0.0	-	0.0
601 Wakayama	6.0	1.2%	166.7	34.3%	0.0	0.0%	31.0	6.4%	0.0	0.0%	0.0	0.0%	0.0	0.0%	282.0	58.1%	0.0	0.0%	485.7
603 Tosa Bay	4.0	0.4%	233.2	23.5%	0.0	0.0%	360.0	36.3%	0.0	0.0%	217.2	21.9%	5.0	0.5%	172.7	17.4%	0.0	0.0%	992.1
604 Hyuganada	5.0	0.4%	434.6	30.7%	0.0	0.0%	58.2	4.1%	59.1	4.2%	148.9	10.5%	73.0	5.2%	634.8	44.9%	0.0	0.0%	1,413.6

3.27 Distribution of Extant Sea Grass Beds (by sea area) (2)

(Unit: ha)

Code / Sea area	Extant sea grass bed																		Total
	Sea grass beds		Sargassum beds		Kombu beds		Arame, Kajime beds		Wakame beds		Ceylon moss beds		Sea lettuce, Green Laver beds		Others (including combined)		Unknown		
	Area	%	Area	%	Area	%	Area	%	Area	%	Area	%	Area	%	Area	%	Area	%	
701 Suonada West	88.0	3.6%	0.0	0.0%	0.0	0.0%	0.0	0.0%	0.0	0.0%	0.0	0.0%	1,392.0	57.7%	933.3	38.7%	0.0	0.0%	2,413.3
702 Suonada East	27.0	2.8%	28.0	2.9%	2.0	0.2%	0.0	0.0%	1.0	0.1%	0.0	0.0%	5.0	0.5%	894.9	92.9%	5.0	0.5%	962.9
703 Iyonada West	0.0	0.0%	0.0	0.0%	0.0	0.0%	48.0	10.7%	0.0	0.0%	0.0	0.0%	4.0	0.9%	398.6	88.5%	0.0	0.0%	450.6
704 Beppu Bay	15.0	6.6%	11.0	4.8%	0.0	0.0%	0.0	0.0%	0.0	0.0%	2.0	0.9%	0.0	0.0%	199.0	87.7%	0.0	0.0%	227.0
705 Bungo Channel	0.0	0.0%	72.0	6.1%	0.0	0.0%	18.3	1.6%	0.0	0.0%	1.7	0.1%	1.2	0.1%	1,084.9	92.1%	0.0	0.0%	1,178.1
706 Iyonada West	19.0	4.7%	11.7	2.9%	0.0	0.0%	0.0	0.0%	0.0	0.0%	0.0	0.0%	0.0	0.0%	369.7	92.3%	0.0	0.0%	400.4
707 Hiroshima Bay	134.8	30.3%	77.7	17.4%	0.0	0.0%	0.0	0.0%	0.0	0.0%	0.0	0.0%	1.2	0.3%	231.9	52.0%	0.0	0.0%	445.6
708 Aki Bay	213.6	15.5%	150.9	11.0%	0.0	0.0%	0.0	0.0%	0.0	0.0%	0.0	0.0%	45.0	3.3%	968.5	70.3%	0.0	0.0%	1,378.0
709 Bingonada	255.6	29.2%	101.9	11.7%	0.0	0.0%	0.0	0.0%	0.0	0.0%	0.0	0.0%	2.2	0.3%	502.5	57.5%	12.0	1.4%	874.2
710 Hiuchinada	50.0	35.0%	44.2	30.9%	0.0	0.0%	0.0	0.0%	0.0	0.0%	0.0	0.0%	0.0	0.0%	48.8	34.1%	0.0	0.0%	143.0
711 Bisan Seto West	778.6	76.3%	97.5	9.5%	0.0	0.0%	0.0	0.0%	1.0	0.1%	0.0	0.0%	0.0	0.0%	144.0	14.1%	0.0	0.0%	1,021.1
712 Bisan Seto East	404.5	56.3%	119.2	16.6%	0.0	0.0%	0.0	0.0%	22.1	3.1%	0.0	0.0%	1.0	0.1%	172.2	23.9%	0.0	0.0%	719.0
713 Harimanada North	27.0	16.9%	65.4	40.8%	0.0	0.0%	0.0	0.0%	0.0	0.0%	0.0	0.0%	14.0	8.7%	53.8	33.6%	0.0	0.0%	160.2
714 Harimanada South	31.7	33.6%	62.6	66.4%	0.0	0.0%	0.0	0.0%	0.0	0.0%	0.0	0.0%	0.0	0.0%	0.0	0.0%	0.0	0.0%	94.3
715 Osaka Bay North	0.0	-	0.0	-	0.0	-	0.0	-	0.0	-	0.0	-	0.0	-	0.0	-	0.0	-	0.0
716 Osaka Bay South	3.0	2.7%	0.0	0.0%	0.0	0.0%	0.0	0.0%	0.0	0.0%	0.0	0.0%	0.0	0.0%	106.5	97.3%	0.0	0.0%	109.5
717 Kii Channel East	22.0	7.1%	16.0	5.2%	0.0	0.0%	4.0	1.3%	0.0	0.0%	0.0	0.0%	4.0	1.3%	262.3	85.1%	0.0	0.0%	308.3
801 Hibikinada	16.3	0.3%	880.7	17.5%	56.1	1.1%	1,802.4	35.7%	0.0	0.0%	0.0	0.0%	1.0	0.0%	2,287.5	45.4%	0.0	0.0%	5,044.0
802 Hakata Bay	0.0	0.0%	62.6	15.4%	0.0	0.0%	344.7	84.6%	0.0	0.0%	0.0	0.0%	0.0	0.0%	0.0	0.0%	0.0	0.0%	407.3
803 Karatsu Imari	247.2	7.2%	578.1	16.8%	0.0	0.0%	316.1	9.2%	0.0	0.0%	70.3	2.0%	0.0	0.0%	2,239.2	64.9%	0.0	0.0%	3,450.9
804 Omura Bay	143.7	12.1%	504.7	42.6%	0.0	0.0%	48.7	4.1%	0.0	0.0%	0.0	0.0%	0.0	0.0%	487.9	41.2%	0.0	0.0%	1,185.0
805 Nagasaki	0.0	0.0%	209.1	45.3%	0.0	0.0%	49.4	10.7%	0.0	0.0%	0.0	0.0%	0.0	0.0%	203.4	44.0%	0.0	0.0%	461.9
806 Amakusanada	0.0	0.0%	251.8	10.6%	0.0	0.0%	62.9	2.6%	0.0	0.0%	0.0	0.0%	6.8	0.3%	2,054.6	86.5%	0.0	0.0%	2,376.1
807 The Sea of Ariake	83.0	5.2%	191.0	11.9%	0.0	0.0%	0.0	0.0%	0.0	0.0%	0.0	0.0%	1.4	0.1%	1,323.7	82.8%	0.0	0.0%	1,599.1
808 Yatsushirokai Sea	108.5	9.5%	114.1	10.0%	0.0	0.0%	46.4	4.1%	51.1	4.5%	0.0	0.0%	256.1	22.4%	564.9	49.5%	0.0	0.0%	1,141.1
809 Satsuma	22.1	2.0%	158.7	14.6%	0.0	0.0%	25.3	2.3%	50.9	4.7%	26.3	2.4%	0.0	0.0%	802.7	73.9%	0.0	0.0%	1,086.0
810 Kagoshima Bay	22.9	8.1%	130.9	46.5%	0.0	0.0%	0.0	0.0%	21.8	7.7%	0.0	0.0%	16.0	5.7%	89.9	31.9%	0.0	0.0%	281.5
811 Okuma	0.0	0.0%	112.8	38.2%	0.0	0.0%	0.0	0.0%	8.2	2.8%	34.3	11.6%	9.8	3.3%	130.1	44.1%	0.0	0.0%	295.2
812 Tsushima	0.0	0.0%	261.2	21.1%	0.0	0.0%	265.4	21.4%	0.0	0.0%	0.0	0.0%	0.0	0.0%	711.9	57.5%	0.0	0.0%	1,238.5
813 Goto	0.0	0.0%	638.2	22.2%	0.0	0.0%	749.6	26.1%	0.0	0.0%	0.0	0.0%	0.0	0.0%	1,484.1	51.7%	0.0	0.0%	2,871.9
814 Osumi islands	0.0	-	0.0	-	0.0	-	0.0	-	0.0	-	0.0	-	0.0	-	0.0	-	0.0	-	0.0
820 Tokara Islands	0.0	-	0.0	-	0.0	-	0.0	-	0.0	-	0.0	-	0.0	-	0.0	-	0.0	-	0.0
830 Amami Islands	0.0	-	0.0	-	0.0	-	0.0	-	0.0	-	0.0	-	0.0	-	0.0	-	0.0	-	0.0
850 Okinawa Island	1,261.8	100.0%	0.0	0.0%	0.0	0.0%	0.0	0.0%	0.0	0.0%	0.0	0.0%	0.0	0.0%	0.0	0.0%	0.0	0.0%	1,261.8
870 Miyako Islands	1,508.0	100.0%	0.0	0.0%	0.0	0.0%	0.0	0.0%	0.0	0.0%	0.0	0.0%	0.0	0.0%	0.0	0.0%	0.0	0.0%	1,508.0
880 Yaeyama Islands	4,105.0	100.0%	0.0	0.0%	0.0	0.0%	0.0	0.0%	0.0	0.0%	0.0	0.0%	0.0	0.0%	0.0	0.0%	0.0	0.0%	4,105.0
890 Senkaku Isalnds	0.0	-	0.0	-	0.0	-	0.0	-	0.0	-	0.0	-	0.0	-	0.0	-	0.0	-	0.0
895 Daito Islands	0.0	-	0.0	-	0.0	-	0.0	-	0.0	-	0.0	-	0.0	-	0.0	-	0.0	-	0.0
Total	25,842.6	18.1%	25,577.8	18.0%	20,413.5	14.3%	10,201.3	7.2%	3,773.0	2.6%	1,811.4	1.3%	2,316.6	1.6%	52,493.8	36.8%	29.0	0.0%	142,459.0

Note:

The data are as of March, 1998. The above values volume is are observed in shallow water (ranging which range is from 10m deep of the lower limit minimum and to a high-water line of the upper maximum limit). For Hyogo and Tokushima, the survey was not conducted. In addition, “0.0 ha” shows “0 ha.”

Source: "National Survey on the Natural Environment 5th [coastal area survey]," Ministry of the Environment

3.28 Area of Hermatypic Coral by Prefecture

（Unit Upper : ha / Lower : % ）

	Hermatype							
	Branching	Tabular	Massive	Cover	Foliate	Others (incl. combined)	Unknown	Total
Hokkaido	0.0 (0.0)	0.0 (0.0)	0.0 (0.0)	0.0 (0.0)	0.0 (0.0)	0.0 (0.0)	0.0 (0.0)	0.0 (0.0)
Aomori	0.0 (0.0)	0.0 (0.0)	0.0 (0.0)	0.0 (0.0)	0.0 (0.0)	0.0 (0.0)	0.0 (0.0)	0.0 (0.0)
Iwate	0.0 (0.0)	0.0 (0.0)	0.0 (0.0)	0.0 (0.0)	0.0 (0.0)	0.0 (0.0)	0.0 (0.0)	0.0 (0.0)
Miyagi	0.0 (0.0)	0.0 (0.0)	0.0 (0.0)	0.0 (0.0)	0.0 (0.0)	0.0 (0.0)	0.0 (0.0)	0.0 (0.0)
Akita	0.0 (0.0)	0.0 (0.0)	0.0 (0.0)	0.0 (0.0)	0.0 (0.0)	0.0 (0.0)	0.0 (0.0)	0.0 (0.0)
Yamagata	0.0 (0.0)	0.0 (0.0)	0.0 (0.0)	0.0 (0.0)	0.0 (0.0)	0.0 (0.0)	0.0 (0.0)	0.0 (0.0)
Fukushima	0.0 (0.0)	0.0 (0.0)	0.0 (0.0)	0.0 (0.0)	0.0 (0.0)	0.0 (0.0)	0.0 (0.0)	0.0 (0.0)
Ibaraki	0.0 (0.0)	0.0 (0.0)	0.0 (0.0)	0.0 (0.0)	0.0 (0.0)	0.0 (0.0)	0.0 (0.0)	0.0 (0.0)
Chiba	0.0 (0.0)	0.0 (0.0)	3.2 (18.9)	0.0 (0.0)	0.0 (0.0)	13.7 (81.1)	0.0 (0.0)	16.9 (100.0)
Tokyo	8.5 (1.6)	66.2 (12.6)	91.5 (17.4)	16.3 (3.1)	0.0 (0.0)	344.5 (65.4)	0.0 (0.0)	527.0 (100.0)
Kanagawa	0.0 (0.0)	0.0 (0.0)	0.0 (0.0)	0.0 (0.0)	0.0 (0.0)	0.0 (0.0)	0.0 (0.0)	0.0 (0.0)
Niigata	0.0 (0.0)	0.0 (0.0)	0.0 (0.0)	0.0 (0.0)	0.0 (0.0)	0.0 (0.0)	0.0 (0.0)	0.0 (0.0)
Toyama	0.0 (0.0)	0.0 (0.0)	0.0 (0.0)	0.0 (0.0)	0.0 (0.0)	0.0 (0.0)	0.0 (0.0)	0.0 (0.0)
Ishikawa	0.0 (0.0)	0.0 (0.0)	0.0 (0.0)	0.0 (0.0)	0.0 (0.0)	0.0 (0.0)	0.0 (0.0)	0.0 (0.0)
Fukui	0.0 (0.0)	0.0 (0.0)	0.0 (0.0)	0.0 (0.0)	0.0 (0.0)	0.0 (0.0)	0.0 (0.0)	0.0 (0.0)
Shizuoka	0.5 (100.0)	0.0 (0.0)	0.0 (0.0)	0.0 (0.0)	0.0 (0.0)	0.0 (0.0)	0.0 (0.0)	0.5 (100.0)
Aichi	0.0 (0.0)	0.0 (0.0)	0.0 (0.0)	0.0 (0.0)	0.0 (0.0)	0.0 (0.0)	0.0 (0.0)	0.0 (0.0)
Mie	0.0 (0.0)	0.0 (0.0)	0.0 (0.0)	0.0 (0.0)	0.0 (0.0)	2.8 (100.0)	0.0 (0.0)	2.8 (100.0)
Kyoto	0.0 (0.0)	0.0 (0.0)	0.0 (0.0)	0.0 (0.0)	0.0 (0.0)	0.0 (0.0)	0.0 (0.0)	0.0 (0.0)
Osaka	0.0 (0.0)	0.0 (0.0)	0.0 (0.0)	0.0 (0.0)	0.0 (0.0)	0.0 (0.0)	0.0 (0.0)	0.0 (0.0)
Wakayama	0.4 (0.4)	79.1 (69.4)	0.0 (0.0)	0.0 (0.0)	0.0 (0.0)	34.4 (30.2)	0.0 (0.0)	113.9 (100.0)
Tottori	0.0 (0.0)	0.0 (0.0)	0.0 (0.0)	0.0 (0.0)	0.0 (0.0)	0.0 (0.0)	0.0 (0.0)	0.0 (0.0)
Shimane	0.0 (0.0)	0.0 (0.0)	0.0 (0.0)	0.0 (0.0)	0.0 (0.0)	0.0 (0.0)	0.0 (0.0)	0.0 (0.0)
Okayama	0.0 (0.0)	0.0 (0.0)	0.0 (0.0)	0.0 (0.0)	0.0 (0.0)	0.0 (0.0)	0.0 (0.0)	0.0 (0.0)
Hiroshima	0.0 (0.0)	0.0 (0.0)	0.0 (0.0)	0.0 (0.0)	0.0 (0.0)	0.0 (0.0)	0.0 (0.0)	0.0 (0.0)
Yamaguchi	0.0 (0.0)	0.0 (0.0)	0.0 (0.0)	0.0 (0.0)	0.0 (0.0)	0.0 (0.0)	0.0 (0.0)	0.0 (0.0)
Kagawa	0.0 (0.0)	0.0 (0.0)	0.0 (0.0)	0.0 (0.0)	0.0 (0.0)	0.0 (0.0)	0.0 (0.0)	0.0 (0.0)
Ehime	0.0 (0.0)	116.3 (98.1)	0.0 (0.0)	0.8 (0.7)	0.0 (0.0)	1.4 (1.2)	0.0 (0.0)	118.5 (100.0)
Kochi	0.0 (0.0)	41.3 (100.0)	0.0 (0.0)	0.0 (0.0)	0.0 (0.0)	0.0 (0.0)	0.0 (0.0)	41.3 (100.0)
Fukuoka	0.0 (0.0)	0.0 (0.0)	0.0 (0.0)	0.0 (0.0)	0.0 (0.0)	0.0 (0.0)	0.0 (0.0)	0.0 (0.0)
Saga	0.0 (0.0)	0.0 (0.0)	0.0 (0.0)	0.0 (0.0)	0.0 (0.0)	0.0 (0.0)	0.0 (0.0)	0.0 (0.0)
Nagasaki	0.0 (0.0)	0.0 (0.0)	7.2 (21.5)	3.4 (10.1)	0.0 (0.0)	19.1 (57.0)	3.8 (11.3)	33.5 (100.0)
Kumamoto	0.0 (0.0)	0.0 (0.0)	0.0 (0.0)	0.0 (0.0)	0.0 (0.0)	153.2 (100.0)	0.0 (0.0)	153.2 (100.0)
Oita	0.0 (0.0)	1.2 (0.9)	0.0 (0.0)	0.0 (0.0)	0.0 (0.0)	131.8 (99.1)	0.0 (0.0)	133.0 (100.0)
Miyazaki	21.6 (5.7)	187.3 (49.4)	70.4 (18.6)	0.0 (0.0)	0.0 (0.0)	99.5 (26.3)	0.0 (0.0)	378.8 (100.0)
Kagoshima	595.2 (10.6)	1,459.6 (26.1)	544.6 (9.7)	23.5 (0.4)	1.8 (0.0)	2,915.7 (52.2)	50.5 (0.9)	5,590.9 (100.0)
Okinawa	0.0 (0.0)	0.0 (0.0)	0.0 (0.0)	0.0 (0.0)	0.0 (0.0)	0.0 (0.0)	28,235.0 (100.0)	28,235.0 (100.0)
Total	626.2 (1.8)	1,951.0 (5.5)	716.9 (2.0)	44.0 (0.1)	1.8 (0.0)	3,716.1 (10.5)	28,289.3 (80.0)	35,345.3 (100.0)

Note:

The data are as of March, 1998. The above values are observed in shallow water (ranging from 10m deep of the lower limit and to a high-water line of the upper limit). For Hyogo and Tokushima, the survey was not conducted. In addition, “0.0 ha” shows “0 ha.”

Source: "National Survey on the Natural Environment 5th coastal area survey," Ministry of the Environment

3.29 Designated Ramsar sites in Japan

(As of March 31, 2017)

	Number of sites	Area (ha)
Ramsar sites	50	148,002

Source: Materials by Ministry of the Environment

3.30 Threatened Wildlife Species in Japan (the species listed in the Red List of the Ministry of the Environment)

The number of Species Listed in Red List 2017 by Ministry of the Environment (As of March 31st, 2017)

Taxon			Species Targeted for Evaluation	Extinct	Extinct in the Wild	Threatened Species				Near Threatened	Data Deficient	Total of listed species	Endangered Local Population
						Endangered Class I			Endangered Class II				
						Class IA	Class IB						
				EX	EW	CR	EN		VU	NT	DD		LP
Fauna		Mammals	160 (160)	7 (7)	0 (0)	33(33)			9(9)	18 (18)	5 (5)	63 (63)	23 (23)
						24 (24)							
						12 (12)	12 (12)						
		Birds	approx.700 (approx.700)	13 (14)	1 (1)	97 (97)			43 (43)	21 (21)	19 (17)	151 (150)	2 (2)
						54 (54)							
						23 (23)	31 (31)						
		Reptiles	100 (98)	0 (0)	0 (0)	37(36)			24(23)	17 (17)	4 (3)	58 (56)	5 (5)
						13 (13)							
						4 (4)	9 (9)						
		Amphibians	76 (66)	0 (0)	0 (0)	28(22)			13 (11)	22 (20)	1 (1)	51 (43)	0 (0)
						15(11)							
						3 (1)	12 (10)						
		Brackish water / freshwater fish	approx.400 (approx.400)	3 (3)	1 (1)	169 (167)			44 (44)	34 (34)	35 (33)	242 (238)	15 (15)
						125 (123)							
						71 (69)	54 (54)						
		Insects	approx.32,000 (approx.32,000)	4 (4)	0 (0)	358 (358)			185 (187)	352 (353)	153 (153)	867 (868)	2 (2)
						173 (171)							
						68 (65)	105 (106)						
		Shellfish	approx.3,200 (approx.3,200)	19 (19)	0 (0)	587 (563)			323 (319)	446 (451)	89 (93)	1141 (1126)	13 (13)
						264 (244)							
						13	7						
		Other invertebrates	approx.5,300 (approx.5,300)	0 (0)	1 (1)	63 (61)			42 (41)	42 (42)	42 (42)	148 (146)	0 (0)
						21(20)							
						0	1						
Subtotal				46 (47)	3 (3)	1,372 (1,337)			683 (677)	952 (956)	348 (347)	2721 (2690)	60 (60)
						689 (660)							
Flora	Ⅰ	Vascular Plants	approx.7,000 (approx.7,000)	28 (32)	11 (10)	1782(1779)			741 (741)	297 (297)	37 (37)	2155 (2155)	0 (0)
						1041(1038)							
						522(519)	519(519)						
	Ⅱ	Bryophytes	approx.1,800 (approx.1,800)	0 (0)	0 (0)	241 (241)			103 (103)	21 (21)	21 (21)	283 (283)	0 (0)
						138 (138)							
		Algae	approx.3,000 [1]) (approx.3,000)	4 (4)	1 (1)	116 (116)			21 (21)	41 (41)	40 (40)	202 (202)	0 (0)
						95 (95)							
		Lichens	approx.1,600 (approx.1,600)	4 (4)	0 (0)	61 (61)			20 (20)	42 (42)	46 (46)	153 (153)	0 (0)
						41 (41)							
		Fungi	approx.3,000 [1]) (approx.3,000)	26 (26)	1 (1)	62 (62)			23 (23)	21 (21)	50 (50)	160 (160)	0 (0)
						39 (39)							
Subtotal				62 (66)	13 (12)	2,262 (2,259)			908 (908)	422 (422)	194 (194)	2953 (2953)	0 (0)
						1,354 (1,351)							
Total of the 13 taxonomical groups				108 (113)	16 (15)	3,634 (3,596)			1,591 (1,585)	1374 (1378)	542 (541)	5674 (5643)	60 (60)
						2,043 (2,011)							

Note

・Numerals within parentheses indicate the respective numbers of species (including subspecies, variety (only for flora) and form (only for algae and fungi)) from the Red List 2015.

The numbers in the LP column are the numbers of local population.

・Some species in the categories of shellfish and other invertebrates have been further categorized to subcategories of Class IA (CR) and Class IB (EN) from mere Class I.

・[1]The number of species excluding those that cannot be evaluated by the naked eye

Source: Documents related to "Red List 2017 by Ministry of the Environment" (the list of threatened species of wildlife) released to the public, Ministry of the Environment

Numbers of species listed in Red List of marine species (As of March 21st, 2017)

Taxon	Species Targeted for Evaluation	Extinct	Extinct in the Wild	Threatened Species			Near Threatened	Data Deficient	Total of listed species	Endangered Local Population
				Endangered Class I		Endangered Class II				
				Class IA	Class IB					
		EX	EW	CR	EN	VU	NT	DD		LP
Fishes	approx.3,900	0	0	16			89	112	217	2
				8	6	2				
Hermatypic corals	approx.690	1	0	6			7	1	15	0
				0	1	5				
Crustaceans	approx.3,000	0	0	30			43	98	171	2
				8	11	11				
Cephalopoda	approx.230	0	0	0			3	0	3	0
				0	0	0				
Other invertebrates	approx.2,300	0	0	4			20	13	37	1
				1	2	1				
Subtotal		1	0	56			162	224	443	5
				17	20	19				

Source: Documents related to "Red List of marine species by Ministry of the Environment" (the list of threatened species of wildlife) released to the public, Ministry of the Environment

3.31 Number of Nationally Endangered Species of Wild fauna and flora and protection and recovery program in Japan

(As of May 31, 2017)

Number of nationally endangered species of wild flora and fauna	208
Number of protection and recovery program	50（63 species）

Source: Materials by Ministry of the Environment

3.32 Designation of Natural Habitat Protection Area

(As of March 31, 2017)

	Number of Locations	Area (ha)
Natural habitat protection area	9	885.5
Management Zone (located in the natural habitat protection area)	9	385.4

Source: Materials by Ministry of the Environment

3.33 Designation of Wildlife Protection Areas and Areas for Paid Game Hunting

Current status of wildlife protection area, etc.

(As of December 31, 2016)

	National		Prefectural		Total	
	Number of locations	Area (thousand ha)	Number of locations	Area (thousand ha)	Number of locations	Area (thousand ha)
Wildlife Protection Area	85	586	3,680	2,963	3,765	3,549
Special Protection Zone	70	160	540	142	610	302
Special Protection Designated	2	1	3	6	5	7

Source: Materials by Ministry of the Environment

Designation for Paid Game Hunting

(Unit : ha)

	Number of locations	Area
FY2004	34	143,209
2005	56	138,266
2006	30	132,170
2007	23	121,941
2008	26	128,216
2009	24	116,457
2010	22	103,635
2011	18	84,629
2012	17	92,061
2013	16	71,247
2014	14	122,675

Source: "Statistics on Wildlife," Ministry of the Environment

3.34 Number of Hunting Licenses and Captured Wildlife by Hunting

	The number of issued licenses					The number captured by hunting (in thousands)		
	Net	Trap	I	II	Total	Birds	Animals	Total
FY2004	43,656	-	151,205	3,469	198,330	1,271	344	1,614
2005	47,552	-	152,780	3,290	203,622	865	316	1,180
2006	48,493	-	135,333	2,754	186,580	950	312	1,262
2007	38,717	51,597	135,960	2,631	228,905	842	300	1,141
2008	30,113	53,571	135,352	2,497	221,533	884	345	1,229
2009	8,366	57,818	117,497	2,194	185,875	747	354	1,101
2010	7,268	64,321	116,506	2,119	190,214	761	428	1,188
2011	7,324	72,892	116,122	2,080	198,418	496	377	873
2012	6,510	76,042	96,242	1,875	180,669	610	381	991
2013	6,470	80,630	96,351	1,876	185,327	438	354	792
2014	6,798	87,057	97,981	1,926	193,762	532	386	918

Note: Until 2006, the licenses for "net" hunting was issued under the name of "net and trap".

Source: "Statistics on Wildlife," Ministry of the Environment

3.35 The number of Invasive Alien Species and of Confirmed/Acknowledged Cases of their Mitigation based on Invasive Alien Species Act

	Invasive alien species (# of species)	Announcement on mitigation (# of species)	Local entities (Obtained confirmation)		Private companies (Obtained acknowledgement)	Total Confirmation / Aknowledgement
			Prefectures	Municipalities		
Mammals	25	25	21	753	25	799
Birds	5	5	0	0	1	1
Reptiles	21	9	1	6	8	15
Amphibians	15	7	0	0	12	12
Fishes	24	14	3	3	19	25
Arachnid	7	7	0	0	0	0
Crustacea	5	5	0	10	22	32
Insects	9	9	3	6	1	10
Other animals	5	5	0	0	1	1
Plants	16	13	89	120	52	261
Total	132	99	117	898	141	1,156

Notes:

*1 On mitigation of Invasive Alien Species which is intended by persons other than the government and conforms with matters officially announced, the persons may obtain confirmation from the competent ministers.

*2 The number of confirmed and acknowledged cases of mitigation is that of the ones valid as of November 1, 2016.

*3 In case one application includes multiple groups of species, each of relevant groups included is counted.

Source: Materials by Ministry of the Environment

3.36 Registration Status of the Animal Handling Business Operators (1)

	Prefecture	Number of Type I business sites	Type I (Classified by business registration)									Total
			Sales	Among "Sales", dealing with cats and dogs	Among Sales, dealing with cats and dogs, also breeder	Keeping	Lending	Training	Exhibition	Auction, etc.	Animal shelter, etc.	
Prefectures	Hokkaido	1,177	558	459	367	635	18	71	174	0	2	1,458
	Aomori	345	177	134	108	181	6	39	48	0	3	454
	Iwate	328	163	132	99	182	6	27	37	0	0	415
	Miyagi	311	179	147	122	168	8	29	21	1	1	407
	Akita	324	180	149	31	177	31	28	56	0	1	473
	Yamagata	285	166	141	87	164	10	25	32	0	0	397
	Fukushima	477	214	163	115	272	13	50	42	0	2	593
	Ibaraki	997	585	487	383	477	39	96	81	0	2	1,280
	Tochigi	750	420	338	258	378	20	56	75	1	1	951
	Gunma	805	512	464	415	357	16	46	45	0	1	977
	Saitama	2,028	1,102	846	655	1,127	74	251	100	3	3	2,660
	Chiba	1,870	916	717	581	1,164	71	236	115	0	2	2,504
	Tokyo	4,493	1,704	1,067	665	3,296	189	698	273	2	14	6,176
	Kanagawa	1,359	530	366	289	906	35	178	67	2	1	1,719
	Niigata	373	161	128	91	224	16	39	34	0	0	474
	Toyama	221	129	112	70	134	5	14	16	0	2	300
	Ishikawa	254	128	109	63	159	2	29	19	0	0	337
	Fukui	188	92	78	44	118	2	10	22	0	0	244
	Yamanashi	306	142	118	93	188	13	35	39	0	2	419
	Nagano	689	337	297	219	442	29	84	85	0	3	980
	Gifu	635	384	322	272	326	20	46	50	0	2	828
	Shizuoka	1,075	570	441	386	597	42	108	85	0	1	1,403
	Aichi	1,618	966	746	609	852	35	126	75	2	3	2,059
	Mie	694	410	348	273	356	18	52	42	0	1	879
	Shiga	480	238	200	171	279	6	39	26	0	1	589
	Kyoto	414	212	176	144	225	6	52	26	0	3	524
	Osaka	1,839	932	729	469	1,165	48	225	92	2	2	2,466
	Hyogo	1,338	641	492	403	762	19	152	69	0	5	1,648
	Nara	478	213	165	137	279	5	51	32	0	2	582
	Wakayama	366	184	159	127	216	8	41	29	0	2	480
	Tottori	154	64	48	34	89	3	27	24	0	0	207
	Shimane	330	180	118	79	194	6	28	38	0	0	446
	Okayama	481	307	257	223	206	3	17	37	0	1	571
	Hiroshima	579	328	278	242	338	9	47	33	0	1	756
	Yamaguchi	397	195	168	128	237	2	27	36	0	0	497
	Tokushima	261	149	125	103	130	2	20	9	0	1	311
	Kagawa	423	289	241	221	190	7	24	23	0	1	534
	Ehime	475	236	201	180	263	4	31	27	0	0	561
	Kochi	226	117	93	64	119	4	18	20	0	0	278
	Fukuoka	997	643	564	469	487	3	70	46	1	2	1,252
	Saga	289	193	167	142	98	2	17	16	0	0	326
	Nagasaki	348	178	149	114	185	4	22	30	0	0	419
	Kumamoto	382	238	183	169	181	10	20	35	0	1	485
	Oita	360	197	160	124	199	8	15	38	0	0	457
	Miyazaki	420	237	214	188	211	3	27	19	0	1	498
	Kagoshima	478	241	213	194	264	5	26	34	0	0	570
	Okinawa	459	225	173	145	220	11	25	89	0	1	571
Cities designated by cabinet order	Sapporo	655	330	281	173	378	3	57	40	2	3	813
	Sendai	285	126	112	63	197	6	30	29	0	1	389
	Saitama	383	165	108	77	258	15	46	14	1	0	499
	Chiba	318	131	105	80	211	17	46	20	0	0	425
	Yokohama	1,238	400	243	126	909	41	185	41	0	3	1,579
	Kawasaki	387	129	86	63	274	9	76	13	0	0	501
	Sagamihara	263	124	96	93	168	9	28	15	0	0	344
	Niigata	221	100	94	68	137	13	28	16	0	0	294
	Shizuoka	290	148	111	90	169	13	34	18	0	1	383
	Hamamatsu	412	252	183	145	208	10	43	19	1	1	534
	Nagoya	706	336	235	162	456	23	75	61	0	3	954
	Kyoto	430	176	133	104	285	16	64	27	0	3	571
	Osaka	816	331	235	129	580	15	66	77	1	1	1,071
	Sakai	292	159	125	91	174	9	26	9	2	0	379
	Kobe	519	237	155	99	308	6	65	38	0	1	655
	Okayama	274	170	130	107	152	4	20	16	1	1	364
	Hiroshima	336	165	134	94	218	5	24	21	0	1	434
	Kitakyushu	296	152	123	94	185	6	19	24	0	1	387
	Fukuoka	408	169	125	84	264	8	37	33	0	0	511
	Kumamoto	262	142	114	96	155	3	14	7	0	0	321
	Total	42,367	21,104	16,510	12,603	25,103	1,127	4,377	2,999	22	91	54,823

Note: The figures for major urban areas are included in the "Prefectures".

3.36 Registration Status of the Animal Handling Business Operators(2)

(As of April 1, 2016)

	Prefecture	Number of Type II Operators	Type II (Classified by business registration)					Total
			Sales	Keeping	Lending	Training	Exhibition	
Prefectures	Hokkaido	14	6	0	0	0	8	14
	Aomori	8	1	1	0	0	8	10
	Iwate	8	3	0	0	0	6	9
	Miyagi	7	5	0	1	0	2	8
	Akita	2	1	0	0	0	1	2
	Yamagata	4	1	0	1	0	3	5
	Fukushima	18	14	7	0	0	6	27
	Ibaraki	18	15	4	0	0	3	22
	Tochigi	5	4	0	1	0	2	7
	Gunma	5	1	0	0	0	4	5
	Saitama	38	33	7	2	4	9	55
	Chiba	26	16	4	0	1	9	30
	Tokyo	62	58	15	3	1	9	86
	Kanagawa	19	14	1	0	1	6	22
	Niigata	2	0	0	0	0	2	2
	Toyama	6	2	1	0	0	6	9
	Ishikawa	4	1	1	0	0	2	4
	Fukui	8	2	1	1	0	5	9
	Yamanashi	14	12	0	0	0	2	14
	Nagano	19	9	4	1	1	10	25
	Gifu	8	5	1	0	0	4	10
	Shizuoka	8	6	3	2	0	1	12
	Aichi	11	5	0	1	1	7	14
	Mie	17	13	3	0	0	4	20
	Shiga	14	10	6	0	0	4	20
	Kyoto	7	5	1	0	1	1	8
	Osaka	14	12	2	1	0	3	18
	Hyogo	41	28	1	6	5	20	60
	Nara	4	2	1	2	0	2	7
	Wakayama	6	3	2	1	0	2	8
	Tottori	3	1	1	0	1	2	5
	Shimane	16	4	3	3	0	11	21
	Okayama	4	2	0	1	0	3	6
	Hiroshima	8	7	0	0	0	1	8
	Yamaguchi	9	5	1	1	0	3	10
	Tokushima	2	2	0	0	0	0	2
	Kagawa	9	8	1	0	0	1	10
	Ehime	10	2	0	0	0	8	10
	Kochi	4	4	3	0	0	0	7
	Fukuoka	13	12	0	1	1	1	15
	Saga	11	10	5	1	1	2	19
	Nagasaki	8	3	0	0	0	5	8
	Kumamoto	6	1	2	0	0	3	6
	Oita	3	1	0	0	0	2	3
	Miyazaki	6	5	2	1	1	2	11
	Kagoshima	3	1	0	0	0	2	3
	Okinawa	3	3	0	0	0	0	3
Cities designated by cabinet order	Sapporo	11	11	1	2	1	3	18
	Sendai	10	10	3	1	0	0	14
	Saitama	9	6	2	0	0	4	12
	Chiba	1	1	0	0	0	0	1
	Yokohama	18	14	6	3	1	4	28
	Kawasaki	8	7	2	2	0	2	13
	Sagamihara	9	8	0	0	0	1	9
	Niigata	5	2	1	0	0	4	7
	Shizuoka	1	1	1	0	0	0	2
	Hamamatsu	3	3	1	0	0	0	4
	Nagoya	13	12	5	1	1	1	20
	Kyoto	6	5	0	0	0	1	6
	Osaka	15	15	1	0	0	0	16
	Sakai	4	2	0	0	0	2	4
	Kobe	14	11	0	2	0	2	15
	Okayama	6	5	2	0	0	2	9
	Hiroshima	5	5	0	0	0	0	5
	Kitakyushu	1	0	0	0	0	1	1
	Fukuoka	6	6	3	0	1	1	11
	Kumamoto	3	3	0	0	0	0	3
	Total	683	485	112	42	23	225	887

Note: The figures for major urban areas are included in the "Prefectures".

Source: "Summary of Civil Service of Animal protection and management," Ministry of the Environment (FY 2016)

3.37 Change in the Number of Dogs and Cats Adopted, Reunited with Owners, and Put to Sleep

(Unit: Thousands)

	Brought in prefectural facilities			Adopted / Reunited			Put to sleep		
	Dogs	Cats	Total	Dogs	Cats	Total	Dogs	Cats	Total
FY1974	1,187	63	1,250	28.5	0.03	28.6	1,159	63	1,221
1979	993	122	1,115	17.8	0.1	17.9	975	118	1,093
1984	890	260	1,150	20.5	0.7	21.3	869	244	1,114
1989	707	341	1,048	20.1	1.1	21.1	687	328	1,015
1994	493	301	795	23.9	1.5	25.5	469	297	765
1995	458	304	761	24.8	1.5	26.3	433	299	732
1996	425	307	732	25.8	1.8	27.6	399	303	702
1997	398	292	690	25.7	1.7	27.3	372	288	661
1998	362	298	659	26.9	1.5	28.4	335	295	630
1999	312	276	588	24.6	1.5	26.1	287	275	562
2000	281	276	557	25.2	1.8	27.1	256	274	530
2001	244	273	517	26.6	2.2	28.8	217	273	490
2002	219	268	486	25.7	2.9	28.7	193	267	460
2003	199	266	466	26.9	3.5	29.4	174	267	441
2004	181	237	418	25.3	4.0	29.3	156	239	395
2005	164	229	392	25.0	3.9	28.9	139	227	365
2006	142	232	374	28.9	4.4	33.4	113	228	341
2007	130	206	336	29.9	6.2	36.1	99	201	299
2008	113	202	315	32.8	8.3	41.1	82	194	276
2009	94	178	272	32.9	10.6	43.6	64	166	230
2010	85	164	250	33.5	11.9	45.3	52	153	205
2011	78	143	221	34.3	12.7	47.0	44	131	175
2012	72	138	209	33.3	14.9	48.1	38	123	162
2013	61	115	176	32.1	16.3	48.4	29	100	128
2014	53	98	151	31.6	18.6	50.2	22	80	101
2015	47	90	137	29.7	23.0	52.7	16	67	83

Notes:

・Before 2000 the data were reported by General Administrative Agency of the Cabinet. After 2001, they were reported by Animal Welfare and Management Office, Nature Conservation Bureau, Ministry of the Environment.

・Total number may not foot because of rounding.

Sources: Materials by Ministry of the Environment

4.01 Material Flow in Japan

(Unit: million t)

	Entrance				Exit								Recycling
	Import volume		Domestic resource amount	Hydrate, etc. (※)	Export volume	Amount of net addition to stocks	Emission of energy consumption and industrial process	Amount food consumption	Amount of fertilizer	Generated amount of waste			Recycled and reused amount
	Products	Resources								To utilize for farming	To reduce volume to dispose	Final disposal	
1990	0.41	6.61	14.79	3.01	0.77	14.16	4.55	1.04	0.17	0.96	2.07	1.09	1.75
1991	0.44	6.67	14.29	2.99	0.85	13.51	4.68	1.02	0.17	0.95	2.13	1.09	1.71
1992	0.37	6.62	13.36	3.05	0.95	12.41	4.66	1.05	0.17	0.95	2.14	1.07	1.77
1993	0.39	6.63	12.90	3.05	1.05	12.00	4.61	0.98	0.17	0.95	2.19	1.02	1.70
1994	0.43	6.96	12.79	3.13	1.09	11.98	4.81	1.07	0.17	0.95	2.28	0.96	1.80
1995	0.49	7.09	12.53	3.10	1.10	12.00	4.88	1.03	0.17	0.92	2.30	0.82	1.93
1996	0.47	7.12	12.65	3.16	1.06	12.14	4.93	1.00	0.16	0.91	2.39	0.81	1.96
1997	0.48	7.29	11.90	3.13	1.17	11.37	4.93	1.02	0.16	0.88	2.44	0.81	1.92
1998	0.42	6.91	10.89	3.04	1.18	10.26	4.73	0.96	0.16	0.86	2.40	0.70	1.88
1999	0.43	7.08	10.78	2.99	1.22	10.25	4.80	0.97	0.15	0.86	2.40	0.62	1.95
2000	0.48	7.52	11.25	2.99	1.20	11.10	5.00	0.97	0.16	0.85	2.41	0.56	2.13
2001	0.46	7.22	11.71	2.96	1.24	11.33	4.94	0.94	0.15	0.85	2.39	0.52	2.07
2002	0.46	7.34	10.90	2.92	1.38	10.53	4.90	0.93	0.15	0.86	2.37	0.48	2.12
2003	0.49	7.48	9.67	2.92	1.39	9.52	4.96	0.93	0.15	0.80	2.42	0.38	2.23
2004	0.53	7.65	8.91	2.91	1.50	8.77	5.04	0.94	0.15	0.82	2.43	0.34	2.28
2005	0.56	7.59	8.31	2.89	1.59	8.15	4.98	0.95	0.16	0.83	2.38	0.31	2.29
2006	0.57	7.56	7.78	2.90	1.70	7.57	4.94	0.92	0.17	0.83	2.41	0.28	2.33
2007	0.57	7.68	7.33	2.89	1.78	7.06	5.10	0.91	0.18	0.83	2.37	0.27	2.44
2008	0.57	7.52	6.83	2.77	1.81	6.59	4.87	0.91	0.18	0.86	2.25	0.22	2.45
2009	0.45	6.58	6.04	2.73	1.67	5.37	4.43	0.87	0.15	0.89	2.23	0.19	2.29
2010	0.55	7.27	5.82	2.67	1.84	5.43	4.80	0.88	0.14	0.83	2.19	0.19	2.46
2011	0.60	7.21	5.52	2.62	1.75	5.11	4.86	0.88	0.14	0.82	2.20	0.17	2.38
2012	0.60	7.41	5.61	2.60	1.79	5.29	5.04	0.86	0.14	0.82	2.09	0.18	2.44
2013	0.59	7.57	5.88	2.58	1.82	5.15	5.53	0.85	0.13	0.81	2.18	0.16	2.69
2015	0.63	7.35	5.91	2.58	1.76	5.26	5.33	0.86	0.14	0.78	2.22	0.15	2.61

Note : It is the collective input (mining, construction, sludge from a water supply industry and mining slag) with waste and hydrous (sludge, livestock manure, sewage, waste acid, waste alkali) and sand due to economic activity.

Source: Compiled from materials by Ministry of the Environment

4.02 Changes in Material Flow Indicators in Japan

Indicators	Positioning of indicators under The Basic Environment Plan																															
	Main indicators for setting goals			Sub-indicators for setting goals		Various indicators for a monitoring purpose																										
	Resource productivity	Recycling rate	Final disposal volume	Resource productivity without non-metallic mineral waste input	Greenhouse gas emissions from the waste sector	Resource productivity that underwent temporary equivalent transformation	Resource productivity of fossil resources	Biomass resource input rate	Resource productivity of manufacturing	Resource productivity by industrial sector (※)	Agriculture, forestry and fisheries	Mining	Food, beverage, feed, fertilizer, and tobacco	Textile products	Timber and furniture	Paper, printing and publishing	Chemical products	Petroleum and coal products	Ceramic, stone and clay	Metal	Machinery	Other manufacturing	Public construction	Other construction	Electricity, gas and water supply	Transportation	Medical service, health, social security and nursing care	Other	Export volume of recyclable resources	Import volume of recyclable resources	Total Material Requirements (TMR) related to the import volume of metallic resources	Greenhouse gas emissions from the waste sector
Unit	10,000 JPY / t	%	million (t)	10,000 JPY / t	%	10,000 JPY / t	10,000 JPY / t	%	10,000 JPY / t		10,000 JPY / t	10,000 JPY / t	10,000 JPY / t	10,000 JPY / t	10,000 JPY / t	10,000 JPY / t	10,000 JPY / t	10,000 JPY / t	10,000 JPY / t	10,000 JPY / t	10,000 JPY / t	10,000 JPY / t	10,000 JPY / t	10,000 JPY / t	10,000 JPY / t	10,000 JPY / t	10,000 JPY / t	10,000 JPY / t	million (t)	million (t)	%	million t-CO2)
1990		7.4	109.0		29.9		-	5.8	-		-	-	-	-	-	-	-	-	-	-	-	-	-	-	-	-	-	-	2.0	5.5	-	39.5
～																																
1995	22.8	8.7	82.0	54.3	32.3	-	97.7	5.6	-		-	-	-	-	-	-	-	-	-	-	-	-	-	-	-	-	-	-	2.7	6.1	-	44.3
1996	23.3	8.8	81.0	55.9	32.3	-	99.0	5.4	-		-	-	-	-	-	-	-	-	-	-	-	-	-	-	-	-	-	-	4.3	4.9	-	44.7
1997	24.0	8.9	81.0	54.9	31.7	-	98.0	5.6	-		-	-	-	-	-	-	-	-	-	-	-	-	-	-	-	-	-	-	5.4	4.9	-	46.1
1998	25.5	9.4	70.0	57.1	32.1	-	100.8	5.8	-		-	-	-	-	-	-	-	-	-	-	-	-	-	-	-	-	-	-	7.6	4.5	-	45.9
1999	25.6	9.6	62.0	56.4	33.5		98.8	5.7	-		-	-	-	-	-	-	-	-	-	-	-	-	-	-	-	-	-	-	8.0	4.4	-	45.6
2000	24.8	10.0	56.0	54.9	35.8	19.4	97.3	5.4	50.2		11.6	-0.4	28.2	86.5	36.7	28.1	23.7	10.5	3.2	14.5	36.5	25.5	4.2	11.9	15.9	65.5	85.1	122.4	7.4	4.3	-	46.7
2001	24.5	9.6	52.0	56.5	35.5	-	99.6	5.2	-		-	-	-	-	-	-	-	-	-	-	-	-	-	-	-	-	-	-	12.4	4.1	-	45.8
2002	25.7	10.2	48.0	56.5	36.4		98.7	5.3	-		-	-	-	-	-	-	-	-	-	-	-	-	-	-	-	-	-	-	15.1	4.1	-	45.5
2003	27.8	11.2	38.0	57.0	38.3		98.9	5.4	-		-	-	-	-	-	-	-	-	-	-	-	-	-	-	-	-	-	-	15.2	3.8	-	46.0
2004	29.1	11.8	34.0	56.3	38.8	-	97.5	5.7	-		-	-	-	-	-	-	-	-	-	-	-	-	-	-	-	-	-	-	19.3	3.9	-	44.8
2005	30.8	12.2	31.0	57.6	39.5	22.4	98.7	5.9	49.9		11.5	-0.5	28.1	112.5	40.2	37.2	27.0	10.2	3.2	13.2	41.4	43.3	4.7	13.7	13.5	70.5	96.4	130.1	21.8	4.5	35.0	43.5
2006	32.4	12.8	28.0	58.9	39.8	-	101.0	6.0	-		-	-	-	-	-	-	-	-	-	-	-	-	-	-	-	-	-	-	24.1	4.6	36.6	41.3
2007	33.7	13.5	27.0	58.8	41.4	-	100.4	6.2	-		-	-	-	-	-	-	-	-	-	-	-	-	-	-	-	-	-	-	23.4	5.0	36.1	41.3
2008	33.9	14.1	22.0	57.6	42.4	-	99.2	6.5	-		-	-	-	-	-	-	-	-	-	-	-	-	-	-	-	-	-	-	22.8	5.4	36.9	42.2
2009	37.9	14.9	18.8	64.0	40.9	-	106.8	7.1	-		-	-	-	-	-	-	-	-	-	-	-	-	-	-	-	-	-	-	25.5	5.0	36.2	38.0
2010	37.6	15.3	19.2	60.4	43.4	-	102.9	6.6	-		-	-	-	-	-	-	-	-	-	-	-	-	-	-	-	-	-	-	25.2	5.6	35.4	37.9
2011	38.6	15.2	17.4	60.8	42.7	26.0	102.8	6.7	51.9		11.4	-0.2	27.6	128.7	39.8	38.9	30.4	11.0	3.5	12.3	42.2	47.3	5.9	14.8	11.3	80.8	104.9	128.1	25.4	5.7	36.1	37.2
2012	38.2	15.2	17.9	60.2	44.1	25.3	100.7	6.5	50.4		11.6	0.3	28.0	133.5	40.8	35.2	32.8	11.3	3.2	12.3	41.5	52.5	6.2	15.1	10.1	74.8	109.1	122.1	30.1	5.4	37.0	38.6
2013	37.8	16.1	16.3	60.4	46.1	24.6	100.7	6.3	50.1		11.6	0.2	27.6	135.9	40.8	37.1	32.1	11.2	3.3	12.3	42.4	53.0	6.3	15.6	9.6	79.3	107.3	122.5	29.6	5.4	37.3	37.7
2014	37.8	15.8	14.8	61.0	45.4	-	103.5	6.5	-																				28.5	5.9	36.6	37.4

Notes:

・Indicators are the same as the material flow indicators in the Third Fundamental Plan for Establishing a Sound Material-Cycle Society .

・To estimate resource productivity by industrial sector, 1995-2000-2005 linked input-output table compiled by Ministry of Internal Affairs and Communications and extended input-output table and simple extended input-output table compiled by Ministry of Economy, Trade and Industry were used. Each table adopts the 2005 standard. Also, note that the estimation gives an effective overview of trends, but cannot do so for inter-sectorial comparison.

・1990 data and 2000 data remain as those years were used for comparison when indicators in the First Fundamental Plan for establishing a sound material-recycle society were set.

Source: Article by Ministry of the Environment

4.03 Waste Disposal Flow Sheet

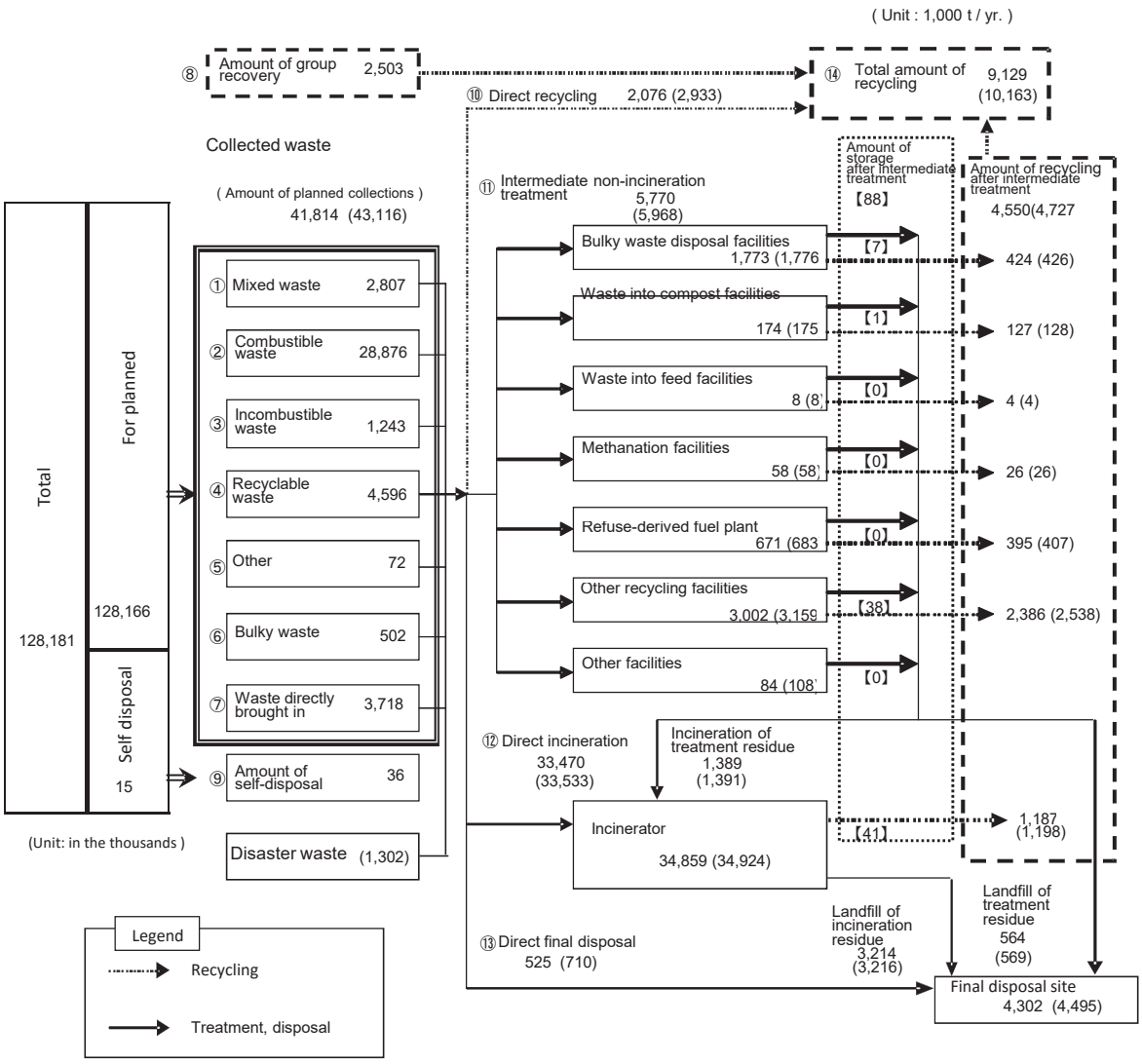

※ Figures in ( ) indicate actual in the previous year.

・Collected waste ＝①＋②＋③＋④＋⑤＋⑥＝38,095 thousand tons
・Collected waste + Waste directly brought in ＝①＋②＋③＋④＋⑤＋⑥＋⑦＝41,814 thousand tons
・Total emissions of waste ＝①＋②＋③＋④＋⑤＋⑥＋⑦＋⑧＝44,317 thousand tons
・Generation per person per day ＝(①＋②＋③＋④＋⑤＋⑥＋⑦＋⑧)／total population／365＝947 g/person/day
・Total amount of waste disposal ＝⑩＋⑪＋⑫＋⑬＝41,841 thousand tons
・Total amount of recycling ＝⑭＝9,129 thousand tons
・Recycling rate ＝⑭／(⑧＋⑩＋⑪＋⑫＋⑬)＝20.6%
・Reduction amount of intermediate treatment = (⑪＋⑫) - amount of recycling after intermediate treatment - Landfill residue ＝30,912 thousand tons

Source : Compiled from “Disposal of Waste in Japan” (FY2014 version） by Ministry of the Environment

4.04 Trends in total amount of waste generated

(Unit : 1,000 t / year)

	Household waste	Business-related waste	Total amount of waste generated	Scheduled pickup	Carried-in by individual	Collected in groups	Total amount of waste generated
1971	—	—	—	24,569	8,333	(5,929)	38,831
1972	—	—	—	27,574	9,098	(5,918)	42,590
1973	—	—	—	28,852	9,923	(5,842)	44,617
1974	—	—	—	26,526	9,330	(4,209)	40,065
1975	—	—	—	27,916	10,262	(3,987)	42,165
1976	—	—	—	28,347	8,728	(3,556)	40,631
1977	—	—	—	30,077	8,574	(2,877)	41,528
1978	—	—	—	31,322	9,207	(2,663)	43,192
1979	—	—	—	32,574	9,574	(2,469)	44,617
1980	—	—	—	32,015	9,496	(2,425)	43,936
1981	—	—	—	33,145	7,081	(2,412)	42,638
1982	—	—	—	34,029	8,039	(2,409)	44,477
1983	—	—	—	33,866	6,752	(2,155)	42,773
1984	—	—	—	34,580	6,515	(1,944)	43,039
1985	—	—	—	35,383	6,147	564	42,094
1986	—	—	—	36,288	6,670	438	43,396
1987	—	—	—	38,164	6,767	568	45,499
1988	—	—	—	39,723	7,221	552	47,496
1989	—	—	—	41,602	7,054	693	49,348
1990	—	—	—	42,495	6,776	986	50,257
1991	—	—	—	42,074	7,646	1,412	51,132
1992	—	—	—	42,134	6,973	1,796	50,903
1993	—	—	—	42,997	6,350	1,920	51,267
1994	36,560	15,239	51,800	43,816	5,849	2,135	51,800
1995	36,984	15,240	52,224	44,100	5,806	2,318	52,224
1996	37,153	15,756	52,908	44,516	5,922	2,470	52,908
1997	37,126	15,972	53,098	44,872	5,711	2,515	53,098
1998	35,994	17,612	53,606	44,771	6,313	2,521	53,606
1999	36,220	17,478	53,698	45,736	5,359	2,604	53,698
2000	36,844	17,990	54,834	46,695	5,373	2,765	54,834
2001	37,381	17,300	54,681	46,528	5,316	2,837	54,681
2002	37,118	17,081	54,199	46,202	5,190	2,807	54,199
2003	37,321	16,950	54,271	46,044	5,398	2,829	54,271
2004	36,838	16,538	53,376	45,114	5,343	2,919	53,376
2005	36,471	16,249	52,720	44,633	5,090	2,996	52,720
2006	36,220	15,804	52,024	44,155	4,810	3,058	52,024
2007	35,724	15,092	50,816	42,629	5,138	3,049	50,816
2008	34,104	14,003	48,106	40,946	4,234	2,926	48,106
2009	32,974	13,278	46,252	39,616	3,845	2,792	46,252
2010	32,385	12,974	45,359	38,327	3,803	2,729	45,359
2011	32,385	13,045	45,430	39,025	3,724	2,682	45,430
2012	32,137	13,097	45,234	38,890	3,697	2,646	45,234
2013	31,757	13,117	44,874	38,546	3,745	2,583	44,874
2014	31,242	13,075	44,317	38,095	3,718	2,503	44,317

Notes:

・"Total waste generated " = "Scheduled pickup" + "Carried-in by individual" + "Collected in groups"

・A generated amount of general waste has been defined “Scheduled pickup” + "Carried-in by individuals” + " Collected in groups” under "The basic strategy of comprehensive and deliberate promotion on reduction of waste and other appropriate measures" based on "Waste Disposal Law".

・"Household Waste" includes "Waste collected in groups."

・The figures in parentheses in "Waste collected in groups" column show "self-treated waste ."

・The amount of "self-treated waste" is the estimates by municipalities.

Source: Compiled from “Waste Treatment in Japan” (an annual report) by Ministry of the Environment

4.05 Changes in generation of waste per person per day

(Unit: g per person / day)

	Total population (Unit: 1,000)	Household waste	Business-related waste	Total amount of waste generated	Scheduled pickup	Carried-in by individuals	Collected in groups	Total amount of waste generated
FY1971	10,454	—	—	—	644	218	155	1,018
1972	10,585	—	—	—	714	236	153	1,102
1973	10,820	—	—	—	731	251	148	1,130
1974	11,057	—	—	—	657	231	104	993
1975	11,238	—	—	—	681	250	97	1,028
1976	11,379	—	—	—	683	210	86	978
1977	11,428	—	—	—	721	206	69	996
1978	11,529	—	—	—	744	219	63	1,026
1979	11,664	—	—	—	765	225	58	1,048
1980	11,743	—	—	—	747	222	57	1,025
1981	11,814	—	—	—	769	164	56	989
1982	11,896	—	—	—	784	185	56	1,024
1983	11,973	—	—	—	775	155	49	979
1984	12,044	—	—	—	787	148	44	979
1985	12,127	—	—	—	799	139	13	951
1986	12,200	—	—	—	815	150	10	975
1987	12,219	—	—	—	853	151	13	1,017
1988	12,265	—	—	—	887	161	12	1,061
1989	12,314	—	—	—	926	157	15	1,098
1990	12,353	—	—	—	943	150	22	1,115
1991	12,415	—	—	—	926	168	31	1,125
1992	12,459	—	—	—	927	153	40	1,119
1993	12,496	—	—	—	943	139	42	1,124
1994	12,519	800	334	1,134	959	128	47	1,134
1995	12,535	806	332	1,138	961	127	51	1,138
1996	12,580	809	343	1,152	970	129	54	1,152
1997	12,614	806	347	1,153	975	124	55	1,153
1998	12,643	780	382	1,162	970	137	55	1,162
1999	12,654	782	377	1,159	988	116	56	1,159
2000	12,673	797	389	1,185	1,010	116	60	1,185
2001	12,701	806	373	1,180	1,004	115	61	1,180
2002	12,730	799	368	1,167	994	112	60	1,167
2003	12,751	800	363	1,163	987	116	61	1,163
2004	12,761	791	355	1,146	969	115	63	1,146
2005	12,771	782	349	1,131	958	109	64	1,131
2006	12,778	777	339	1,115	947	103	66	1,115
2007	12,749	766	323	1,089	914	110	65	1,089
2008	12,753	733	301	1,033	880	91	63	1,033
2009	12,743	709	285	994	852	83	60	994
2010	12,730	697	279	976	836	82	59	976
2011	12,715	696	280	976	839	80	58	977
2012	12,862	685	279	964	828	79	56	964
2013	12,839	678	280	958	823	80	55	958
2014	12,818	668	279	947	814	79	54	947

Notes:
- As for the population, the data are based on Basic Resident Register as of October 1st of each year, while some of them are the ones as of March 31.
- "Collected waste in groups" refers to "Self-treated Waste" until 1984.
- Waste generation per person per day = (Scheduled pickup + Carried-in by individuals + Collected in groups) / total population /365 (or 366)
- Waste generation per person per day = (Waste from life activities + Waste from business activities) /total population /365 (or 366)

Source: Compiled from “Waste Treatment in Japan” (an annual report) by Ministry of the Environment

4.06 Waste Treatment by Prefecture (1)

(Actual 2014)

	Total population (thousand people)	Population covered with scheduled waste pickup (thousand people)	Total waste generation						Waste generation per person / day (g/person/day)	Self-treatment (thousand tons)
			Scheduled pickup (thousand tons)	Carried-in by individuals (thousand tons)	Collected in groups (thousand tons)	Total (thousand tons)	Household waste (A) (thousand tons)	Business-related waste (B) (thousand tons)		
Hokkaido	5,432	5,426	1,576	243	145	1,963	1,359	604	990	1
Aomori	1,356	1,356	459	45	13	517	353	165	1,046	0
Iwate	1,303	1,303	387	40	23	450	308	142	945	0
Miyagi	2,328	2,328	757	63	37	856	596	261	1,008	0
Akita	1,058	1,058	348	33	5	386	260	126	1,000	0
Yamagata	1,140	1,140	322	32	31	385	274	111	925	1
Fukushima	1,951	1,951	653	87	30	770	558	212	1,081	0
Ibaraki	2,974	2,974	956	94	41	1,092	782	310	1,006	0
Tochigi	2,006	2,006	591	61	27	680	501	179	929	1
Gunma	2,014	2,014	635	95	42	773	576	196	1,051	0
Saitama	7,303	7,303	2,121	141	130	2,392	1,846	546	897	0
Chiba	6,253	6,253	1,875	128	134	2,136	1,545	592	936	0
Tokyo	13,287	13,286	4,085	145	284	4,514	3,398	1,115	931	0
Kanagawa	9,117	9,117	2,538	135	299	2,972	2,264	708	893	0
Niigata	2,339	2,339	768	77	37	882	608	274	1,033	0
Toyama	1,086	1,086	337	45	32	413	280	133	1,042	0
Ishikawa	1,160	1,160	367	42	9	418	266	151	986	0
Fukui	804	804	226	37	18	280	207	73	954	0
Yamanashi	856	856	270	30	11	311	224	87	995	0
Nagano	2,149	2,149	581	52	24	657	464	193	838	6
Gifu	2,046	2,046	563	67	51	681	494	187	911	2
Shizuoka	3,789	3,789	1,075	113	60	1,248	903	345	902	0
Aichi	7,487	7,487	2,156	215	180	2,551	1,912	639	934	0
Mie	1,828	1,828	571	56	23	650	475	175	975	0
Shiga	1,421	1,421	388	31	23	441	323	119	851	0
Kyoto	2,629	2,625	704	104	57	864	529	336	901	1
Osaka	8,871	8,871	2,803	155	226	3,185	1,895	1,290	983	0
Hyogo	5,635	5,635	1,648	169	170	1,987	1,344	643	966	0
Nara	1,396	1,396	397	49	36	483	338	144	947	0
Wakayama	1,005	1,005	286	67	11	364	265	99	992	18
Tottori	584	584	191	16	6	214	127	86	1,002	0
Shimane	707	706	214	32	2	248	172	76	960	0
Okayama	1,940	1,940	564	84	60	708	472	237	1,000	0
Hiroshima	2,870	2,870	851	67	24	942	599	343	899	0
Yamaguchi	1,433	1,433	431	91	14	536	368	168	1,025	0
Tokushima	778	778	253	13	9	275	207	67	968	1
Kagawa	1,006	1,006	313	11	4	328	230	98	893	0
Ehime	1,428	1,428	392	72	11	475	356	119	910	0
Kochi	748	747	231	28	1	261	189	72	958	0
Fukuoka	5,117	5,115	1,418	335	103	1,857	1,204	653	994	1
Saga	848	848	240	28	6	274	193	81	886	0
Nagasaki	1,415	1,415	401	73	20	493	336	157	955	0
Kumamoto	1,819	1,818	499	42	21	561	391	171	846	1
Oita	1,191	1,191	370	39	7	416	286	130	957	1
Miyazaki	1,136	1,136	348	53	2	404	268	136	973	0
Kagoshima	1,687	1,687	512	62	4	578	406	173	939	0
Okinawa	1,449	1,449	425	21	0	446	292	154	844	0
Total	128,181	128,166	38,095	3,718	2,503	44,317	31,242	13,075	947	36

Notes:

・Processing rate of reduction = (direct incineration+ bulk-waste treatment facilities+ waste composting facilities+feedstuff-production facilities + methanation facilities + fuel-production plant + other recycling facilities + other facilities + direct recycling) ÷ amount of waste treatment × 100

・Household waste includes the amount of group recovery.

4.06 Waste Treatment by Prefecture (2)

(Actual 2014)

	Amount of Waste disposal															Amount of Final disposal			
			Intermediate non-incineration reprocesses																
	Direct incineration (thousand tons)	Direct final disposal (thousand tons)	(thousand tons)	Bulkwaste disposal facility (thousand tons)	composting facilities (thousand tons)	Feedstuff-production facilities (thousand tons)	Methanation facilities (thousand tons)	Fuel-production plants (thousand tons)	Recycling facilities (thousand tons)	Other facilities (thousand tons)	Direct recycling (thousand tons)	Total (thousand tons)	Ate of weight-reduction treatment (%)	Amount recycled after intermediate reprocesses (thousand tons)	Recycling rate (%)	Direct final disposal (thousand tons)	Incineration residue (thousand tons)	Non-incineration reprocesses residue (thousand tons)	Total (thousand tons)
Hokkaido	1,124	175	459	119	34	1	17	23	259	6	31	1,789	90.2	301	24.6	175	125	58	358
Aomori	409	25	60	21	0	0	0	0	39	0	10	504	95.0	46	13.5	25	45	8	78
Iwate	356	2	51	18	4	0	0	0	28	0	18	427	99.5	38	17.4	2	40	8	50
Miyagi	658	6	148	55	1	0	0	0	92	0	6	819	99.2	98	16.4	6	93	9	108
Akita	316	4	42	15	2	0	0	0	24	0	19	381	98.9	39	16.2	4	27	6	37
Yamagata	305	3	39	14	3	0	0	0	21	1	8	354	99.2	22	15.8	3	34	9	45
Fukushima	634	4	67	37	0	0	0	0	29	0	31	735	99.5	46	13.9	4	60	14	78
Ibaraki	747	0	158	65	2	0	0	39	52	0	95	1,000	100.0	102	22.8	0	78	9	88
Tochigi	540	0	82	29	2	0	0	0	51	0	31	652	100.0	56	16.8	0	47	14	61
Gunma	621	3	77	48	1	0	0	7	21	0	29	731	99.6	50	15.6	3	69	13	86
Saitama	1,825	1	285	93	2	0	0	2	184	5	155	2,266	99.9	304	24.6	1	101	22	124
Chiba	1,613	4	265	110	7	0	0	0	139	8	132	2,015	99.8	225	22.8	4	133	25	161
Tokyo	3,408	5	400	180	3	0	0	0	215	2	437	4,249	99.9	314	22.8	5	278	72	355
Kanagawa	2,170	10	366	80	18	0	0	4	259	6	126	2,672	99.6	339	25.7	10	218	9	237
Niigata	631	10	130	29	8	0	19	0	74	0	74	845	98.8	94	23.3	10	56	14	80
Toyama	302	3	65	22	6	3	5	19	10	0	12	382	99.3	55	24.0	3	27	4	34
Ishikawa	251	12	126	2	1	0	0	72	46	4	20	409	97.1	28	13.8	12	34	8	54
Fukui	210	1	45	29	0	0	0	0	16	0	7	263	99.6	22	16.6	1	24	3	28
Yamanashi	248	0	42	20	1	0	0	0	21	1	9	299	100.0	32	16.7	0	31	6	38
Nagano	485	7	64	15	3	0	0	0	43	2	77	633	98.9	51	23.1	7	48	9	64
Gifu	517	11	78	23	0	0	0	17	36	1	24	630	98.3	61	19.9	11	42	7	60
Shizuoka	994	9	129	35	2	0	0	21	68	3	49	1,181	99.3	145	20.5	9	55	8	71
Aichi	1,930	19	303	110	12	0	0	0	180	1	120	2,371	99.2	268	22.3	19	183	11	213
Mie	421	20	149	20	1	0	0	86	41	1	36	627	96.8	134	29.7	20	6	12	38
Shiga	320	7	58	24	2	0	0	11	21	0	25	410	98.3	43	21.0	7	36	5	48
Kyoto	666	14	123	40	0	4	0	10	52	17	19	822	98.3	48	14.1	14	93	12	119
Osaka	2,672	1	252	107	0	0	0	0	145	0	38	2,964	100.0	174	13.7	1	383	7	391
Hyogo	1,544	27	199	90	11	0	6	5	84	2	51	1,820	98.5	115	16.8	27	195	24	247
Nara	383	2	46	23	0	0	0	0	22	1	17	448	99.6	22	15.6	2	53	6	61
Wakayama	299	10	41	8	0	0	0	1	31	1	6	355	97.3	33	13.5	10	34	6	49
Tottori	151	0	31	1	6	0	0	1	23	0	24	207	99.8	25	26.0	0	13	4	18
Shimane	178	5	53	12	4	0	0	11	26	0	9	245	97.9	49	24.2	5	9	6	21
Okayama	568	8	49	17	1	0	0	0	29	3	24	648	98.8	126	29.5	8	22	7	37
Hiroshima	614	29	265	44	1	0	0	133	87	1	12	920	96.9	170	21.8	29	63	14	106
Yamaguchi	394	8	87	20	0	0	4	15	47	0	31	521	98.4	119	30.7	8	14	9	32
Tokushima	213	1	38	20	0	0	0	1	16	0	15	266	99.8	23	16.9	1	22	9	32
Kagawa	246	8	56	12	0	0	0	2	42	0	14	324	97.5	45	19.3	8	22	5	35
Ehime	355	10	81	26	2	0	0	7	43	3	17	464	97.8	60	18.6	10	27	10	47
Kochi	213	5	35	3	0	0	0	10	22	0	8	261	98.2	49	22.2	5	6	2	13
Fukuoka	1,428	16	280	67	4	0	1	126	81	0	96	1,820	99.1	208	21.1	16	155	25	196
Saga	224	0	38	7	2	0	0	1	27	0	6	268	100.0	39	18.7	0	13	3	17
Nagasaki	406	14	47	5	1	0	0	1	39	1	6	474	97.0	52	15.8	14	30	4	49
Kumamoto	420	3	104	12	4	0	0	40	48	0	13	540	99.4	73	19.1	3	46	8	57
Oita	331	3	65	9	1	0	5	4	47	0	10	410	99.4	66	20.1	3	20	9	31
Miyazaki	293	2	68	3	5	0	0	1	49	11	38	402	99.4	34	18.3	2	35	15	52
Kagoshima	456	15	71	20	13	0	0	0	35	2	33	574	97.4	53	15.6	15	44	9	68
Okinawa	383	2	51	11	4	0	0	0	36	1	8	444	99.5	57	14.7	2	24	2	28
Total	33,470	525	5,770	1,773	174	8	58	671	3,002	84	2,076	41,841	98.7	4,550	20.6	525	3,214	564	4,302

Source: Compiled from “Waste Treatment in Japan” (an annual report) by Ministry of the Environment

4.07 Development of Waste Incineration Plants

Changes in the number of waste incineration plants by furnace type and the operating capacities

Type	Full continuous		Semi-continuous		Mechanized batch		Fixed batch		Total	
	# of Facilities	Operating capacity (t / day)	# of Facilities	Operating capacity (t / day)	# of Facilities	Operating capacity (t / day)	# of Facilities	Operating capacity (t / day)	# of Facilities	Operating capacity (t / day)
FY1977	326	85,354	51	4,270	1,088	31,636	537	7,916	2,002	129,176
1978	344	94,964	79	5,700	1,086	31,050	516	7,053	2,025	138,767
1979	341	96,396	113	8,862	1,063	32,504	497	6,811	1,984	144,573
1980	357	98,914	142	10,492	1,085	31,379	415	6,109	1,999	146,894
1981	370	101,399	157	11,423	1,059	30,048	397	5,510	1,983	148,380
1982	360	103,479	171	13,538	1,043	29,579	368	4,757	1,942	151,353
1983	361	105,152	183	14,346	1,035	29,601	336	4,204	1,915	153,303
1984	388	110,073	198	15,448	1,014	28,716	288	3,236	1,888	157,473
1985	403	113,453	207	15,747	1,000	28,260	290	3,393	1,900	160,853
1986	406	114,346	220	16,937	978	27,041	295	3,075	1,899	161,399
1987	409	116,201	230	17,577	970	27,133	284	2,737	1,893	163,648
1988	397	115,756	246	19,102	959	27,251	268	2,630	1,870	164,739
1989	425	120,130	281	21,010	963	24,804	272	2,540	1,941	168,484
1990	426	123,616	293	22,680	905	24,330	249	2,281	1,873	172,907
1991	435	127,512	324	25,188	875	22,748	207	2,129	1,841	177,577
1992	438	133,294	335	26,329	877	22,889	214	1,549	1,864	184,061
1993	433	128,911	324	25,344	866	22,418	231	1,434	1,854	178,106
1994	440	134,402	365	28,674	844	21,503	238	1,538	1,887	186,117
1995	445	137,072	379	30,438	813	20,009	243	1,326	1,880	188,844
1996	449	140,134	383	30,664	783	19,172	257	1,269	1,872	191,239
1997	460	142,011	377	30,630	759	18,423	247	1,180	1,843	192,243
1998	474	144,184	378	30,297	753	16,935	164	1,202	1,769	192,618
1999	498	149,327	365	28,794	705	15,799	149	1,204	1,717	195,125
2000	534	156,934	362	28,337	672	15,006	147	1,280	1,715	201,557
2001	549	159,252	359	28,167	629	14,137	143	1,177	1,680	202,733
2002	579	160,591	321	25,262	513	11,731	77	1,291	1,490	198,874
2003	588	159,537	300	23,573	447	10,289	61	458	1,396	193,856
2004	612	163,615	286	22,123	422	9,806	54	408	1,374	195,952
2005	618	160,186	269	19,961	380	8,899	51	412	1,318	189,458
2006	627	162,149	256	18,849	370	8,606	48	412	1,301	190,015
2007	642	162,733	245	17,931	353	8,151	45	329	1,285	189,144
2008	642	161,305	245	17,533	337	8,145	45	320	1,269	187,303
2009	644	162,024	235	16,824	317	7,035	47	323	1,243	186,205
2010	648	161,832	228	16,501	305	6,728	40	312	1,221	185,372
2011	658	163,574	221	15,889	296	6,574	36	219	1,211	186,255
2012	655	162,334	218	15,556	281	6,316	35	220	1,189	184,426
2013	652	161,044	220	15,518	267	5,919	33	202	1,172	182,683
2014	662	162,480	207	14,775	258	5,640	34	217	1,161	183,111

Notes:
・The figures in the table above include facilities of which construction started in the indicated fiscal year and of which operations are suspended temporarily, but abolished facilities
・Figures for mechanized batch is calculated by an equation ("Batch" - "Fixed batch").

Source: Compiled from "Waste Treatment in Japan" (an annual report) by Ministry of the Environment

Power generation by waste incineration plants

Classification	# of Generation plants	Total Generation capacity (MW)	Generation efficiency (%)	Total generation amount (GWh)
FY2001	236	1,246	10.43	5,538
2002	263	1,365	10.06	6,366
2003	271	1,441	10.23	7,100
2004	281	1,491	10.50	7,129
2005	286	1,512	10.70	7,090
2006	293	1,590	10.93	7,190
2007	298	1,604	11.14	7,132
2008	300	1,615	11.19	6,935
2009	304	1,673	11.29	6,876
2010	306	1,700	11.61	7,210
2011	314	1,740	11.73	7,487
2012	318	1,754	11.92	7,747
2013	328	1,770	12.03	7,966
2014	338	1,907	12.42	7,958

Notes:
・The figures in the table above include facilities of which construction started in the indicated fiscal year and of which operations are suspended temporarily, but abolished facilities are excluded.
・Generation efficiency is calculated by the following equation.
Generation efficiency [%] = 860[kcal/kWh] × total generation amount [kWh/year] / 1,000[kg/t]× amount of Waste incineration [t / year] × amount of Waste heat generation [kcal / kg]
・In this survey, the specifications and the publicized values for the standard quality of waste have been inquired about. However, it is calculated by actual values in the case there are no specifications, etc.

Source: Compiled from "Waste Treatment in Japan" (an annual report) by Ministry of the Environment

4.08 Development of Waste Incineration Plants by Prefecture

(Actual 2014)

Type	Full continuous		Semi-continuous		Mechanized batch		Fixed batch		Total	
	# of Facilities	Operating capacity (t / day)	# of Facilities	Operating capacity (t / day)	# of Facilities	Operating capacity (t / day)	# of Facilities	Operating capacity (t / day)	# of Facilities	Operating capacity (t / day)
Hokkaido	24	5,372	11	433	24	319	7	57	66	6,181
Aomori	11	1,773	5	254	0	0	0	0	16	2,027
Iwate	13	2,136	1	40	4	113	1	15	19	2,304
Miyagi	11	2,897	6	481	2	60	0	0	19	3,438
Akita	8	1,218	7	411	1	20	0	0	16	1,649
Yamagata	9	1,391	0	0	0	0	0	0	9	1,391
Fukushima	12	2,249	9	700	3	95	1	8	25	3,052
Ibaraki	15	3,201	11	1,180	4	140	0	0	30	4,521
Tochigi	13	2,283	4	342	0	0	0	0	17	2,625
Gunma	15	2,960	2	120	7	230	0	0	24	3,310
Saitama	43	8,980	7	754	2	70	0	0	52	9,804
Chiba	35	7,781	11	912	1	48	0	0	47	8,740
Tokyo	42	17,961	0	0	10	107	2	7	54	18,075
Kanagawa	27	12,792	6	434	2	50	0	0	35	13,276
Niigata	16	2,433	16	1,238	2	41	0	0	34	3,712
Toyama	4	1,276	2	224	0	0	0	0	6	1,500
Ishikawa	5	1,150	2	200	3	89	0	0	10	1,439
Fukui	5	823	4	306	2	44	0	0	11	1,173
Yamanashi	6	1,433	0	0	6	215	0	0	12	1,648
Nagano	10	1,737	6	560	9	278	1	2	26	2,577
Gifu	17	2,487	3	110	8	119	1	3	29	2,718
Shizuoka	24	5,201	7	347	5	124	2	21	38	5,693
Aichi	37	10,275	2	150	2	25	0	0	41	10,450
Mie	10	1,865	0	0	14	343	1	16	25	2,224
Shiga	9	1,105	3	400	2	118	0	0	14	1,623
Kyoto	13	3,331	5	291	4	105	0	0	22	3,727
Osaka	47	15,465	0	0	1	46	0	0	48	15,511
Hyogo	31	9,095	6	450	6	157	0	0	43	9,702
Nara	9	1,925	6	308	11	233	0	0	26	2,466
Wakayama	8	1,413	4	254	9	165	0	0	21	1,832
Tottori	4	774	1	60	9	103	0	0	14	937
Shimane	5	731	1	52	5	66	1	10	12	858
Okayama	9	2,190	5	433	13	317	0	0	27	2,940
Hiroshima	12	2,655	7	544	7	164	0	0	26	3,363
Yamaguchi	10	1,947	2	110	1	22	1	3	14	2,082
Tokushima	6	776	4	222	6	178	3	21	19	1,197
Kagawa	5	1,200	2	140	1	6	0	0	8	1,346
Ehime	9	1,765	3	139	10	171	3	3	25	2,078
Kochi	5	1,100	0	0	4	89	2	34	11	1,223
Fukuoka	16	6,340	5	374	2	84	2	2	25	6,800
Saga	6	988	2	168	2	26	1	1	11	1,183
Nagasaki	11	1,735	6	421	10	140	0	0	27	2,296
Kumamoto	7	1,481	4	306	8	293	1	2	20	2,082
Oita	4	1,170	5	348	5	102	0	0	14	1,620
Miyazaki	4	728	1	40	5	140	1	8	11	916
Kagoshima	13	1,603	8	303	12	221	3	3	36	2,129
Okinawa	7	1,293	5	216	14	166	0	0	26	1,675
Total	662	162,480	207	14,775	258	5,640	34	217	1,161	183,111

Notes:
- ・There excludes the shutdown facilities but includes the ones whose construction started in 2013 and the ones temporarily closed just for the current year.
- ・Figures for mechanized batch is calculated by an equation ("batch" - "Fixed batch").
- ・There excludes the melting facilities of the furnace type which are not described the above classification.

Source : Compiled from "Waste Treatment in Japan (an annual report 2014)" by Ministry of the Environment

4.09 Development of Recycling Facilities (1)

Changes in the number of recycling facilities and reprocessing capacities

Type	Recycling facilities														Refuse-derived fuel plants		Other facilities		Total	
	Separation		Compress & Pack		Into compost		Into feed		Methanation		Others		Total							
	# of Facilities	Reprocessing capacity (t / day)	# of Facilities	Reprocessing capacity (t / day)	# of Facilities	Reprocessing capacity (t / day)	# of Facilities	Reprocessing capacity (t / day)	# of Facilities	Reprocessing capacity (t / day)	# of Facilities	Reprocessing capacity (t / day)	# of Facilities	Reprocessing capacity (t / day)	# of Facilities	Reprocessing capacity (t / day)	# of Facilities	Reprocessing capacity (t / day)	# of Facilities	Reprocessing capacity (t / day)
FY1981	–	–	–	–	(15)	(412)	–	–	–	–	–	–	15	412	–	–	–	–	15	412
1982	–	–	–	–	(20)	(424)	–	–	–	–	–	–	20	424	–	–	–	–	20	424
1983	–	–	–	–	(23)	(389)	–	–	–	–	–	–	23	389	–	–	–	–	23	389
1984	–	–	–	–	(28)	(598)	–	–	–	–	–	–	28	598	–	–	–	–	28	598
1985	–	–	–	–	(36)	(868)	–	–	–	–	–	–	36	868	–	–	–	–	36	868
1986	–	–	–	–	(39)	(866)	–	–	–	–	–	–	39	866	–	–	–	–	39	866
1987	–	–	–	–	(29)	(632)	–	–	–	–	–	–	29	632	–	–	–	–	29	632
1988	–	–	–	–	(29)	(583)	–	–	–	–	–	–	29	583	–	–	–	–	29	583
1989	–	–	–	–	(29)	(599)	–	–	–	–	–	–	29	599	–	–	–	–	29	599
1990	–	–	–	–	(26)	(549)	–	–	–	–	–	–	26	549	–	–	–	–	26	549
1991	–	–	–	–	(29)	(566)	–	–	–	–	–	–	29	566	–	–	–	–	29	566
1992	–	–	–	–	(28)	(531)	–	–	–	–	–	–	28	531	–	–	–	–	28	531
1993	–	–	–	–	(32)	(597)	–	–	–	–	–	–	490	597	5	246	27	327	554	9,741
1994	–	–	–	–	(31)	(568)	–	–	–	–	–	–	553	568	5	246	30	515	619	10,825
1995	–	–	–	–	(32)	(573)	–	–	–	–	–	–	565	573	8	307	49	697	654	11,502
1996	–	–	–	–	(34)	(596)	–	–	–	–	–	–	544	596	11	363	73	1,711	662	13,355
1997	–	–	–	–	(32)	(615)	–	–	–	–	–	–	592	11,439	14	576	94	2,164	700	14,179
1998	–	–	–	–	(33)	(599)	–	–	–	–	–	–	753	14,526	23	936	17	293	793	15,755
1999	–	–	–	–	(38)	(603)	–	–	–	–	–	–	813	15,379	30	1,310	29	558	872	17,248
2000	–	–	–	–	(40)	(628)	–	–	–	–	–	–	882	16,488	32	1,513	35	685	949	18,686
2001	–	–	–	–	(45)	(682)	–	–	–	–	–	–	938	17,139	38	1,768	46	1,036	1,022	19,943
2002	–	–	–	–	(56)	(744)	–	–	–	–	–	–	1,005	18,209	47	2,764	60	1,591	1,112	22,564
2003	–	–	–	–	(59)	(759)	–	–	–	–	–	–	1,044	19,603	54	3,058	61	1,716	1,159	24,377
2004	–	–	–	–	(65)	(763)	–	–	–	–	–	–	1,081	19,646	57	3,532	67	1,714	1,205	24,892
2005	804	17,650	799	17,040	86	1,347	4	83	6	184	126	2,771	1,044	21,266	60	3,424	63	2,111	1,167	26,801
2006	841	20,226	828	17,214	94	1,335	2	37	8	233	135	3,038	1,085	23,652	65	3,466	68	2,258	1,218	29,375
2007	859	18,689	850	17,869	92	3,359	3	62	–	–	138	3,618	1,088	24,155	67	3,577	56	2,236	1,211	29,969
2008	873	19,097	862	18,252	98	3,447	3	214	–	–	140	3,463	1,106	24,699	67	3,425	57	2,313	1,230	30,437
2009	880	18,521	860	17,461	101	3,440	1	33	–	–	145	3,675	1,100	23,866	70	3,662	56	2,311	1,226	29,839
2010	877	18,463	855	17,338	102	3,511	1	33	–	–	140	3,477	1,088	23,613	69	3,617	56	2,434	1,213	29,664
2011	895	18,878	872	17,753	102	3,487	1	33	–	–	144	3,582	1,111	24,095	71	3,578	56	1,911	1,238	29,584
2012	865	18,557	847	17,562	97	3,455	1	33	–	–	138	3,477	1,077	23,804	72	3,668	54	1,823	1,203	29,295
2013	863	18,584	844	17,607	96	3,428	1	33	–	–	141	3,686	1,070	23,837	71	3,731	54	1,811	1,195	29,379
2014	840	18,806	827	17,918	96	3,469	1	33	–	–	139	3,258	1,048	23,764	73	3,826	49	1,728	1,170	29,318

Notes:

・The facilities in this chart are the ones that were built by the municipalities and the consortiums. It excludes the shutdown facilities but include the ones whose constructions started in indicated each fiscal years and the ones temporarily closed just for the indicated current year.

・"Recycling facilities" are facilities for sorting non-combustible waste, for compressing and packing waste (including the preconditioning facilities and the facilities located in the final disposal sites), for turning combustible waste and garbage into compost, and for processing into feedstuff, and the methanation facilities. "Bulk waste disposal facilities" and "Refuse-derived fuel plants" are not included in them.

・Before 1997, ①the facilities other than for sorting or recycling recyclable waste, ②the facilities not categorized as "Refuse-derived fuel plants" and the facilities categorized as both ① and ② were classified as "Others", but from the field survey in FY1998, the facilities to crush and reduce volume for landfill have been classified as "Others" regardless of the purpose whether or not to recycle waste.

・From FY2005, "Recycling facilities" have been classified as "Separation", "Compression & Packing", "Into compost", "Into feed", "Methanation" and "Others", and the "High speed composting facilities" is included in "Recycling facilities". The number in the parentheses under "Waste into compost" is solely the number of "High-speed composting facilities" and is included in the total facilities.

・The methanation facilities have been included in "Refuse-derived fuel plants" since FY2007.

4.09 Development of Recycling Facilities (2)

Changes in number of bulky waste facility and operating capacities

Type	Combination		Crushing		Compression		Total	
	# of Facilities	Operating capacities (t / day)	# of Facilities	Operating capacities (t / day)	# of Facilities	Operating capacities (t / day)	# of Facilities	Operating capacities (t / day)
FY1981							417	17,385
1982							440	17,279
1983							471	19,472
1984							494	20,291
1985							538	21,162
1986							541	22,693
1987							556	23,279
1988							594	24,041
1989							612	24,814
1990							638	25,724
1991							588	23,674
1992							610	24,462
1993							597	23,445
1994							632	25,050
1995							654	25,717
1996							670	26,281
1997	412	16,839	210	8,339	58	1,276	680	26,454
1998	429	17,201	203	8,728	54	1,071	686	27,000
1999	429	16,928	200	8,375	51	1,149	680	26,452
2000	441	17,181	201	8,201	53	1,226	695	26,608
2001	439	17,038	202	8,702	57	1,611	698	27,350
2002	436	16,695	210	8,804	50	1,331	696	26,830
2003	434	16,644	210	8,413	44	1,388	688	26,445
2004	426	16,435	225	9,023	42	1,045	693	26,503
2005	413	16,247	226	8,885	41	954	680	26,087
2006	391	15,410	251	9,303	39	1,076	681	25,789
2007	390	14,852	247	9,294	39	1,074	676	25,219
2008	376	13,918	245	9,746	41	1,118	662	24,782
2009	368	13,261	250	10,217	43	1,170	661	24,648
2010	368	13,694	247	9,781	38	1,025	653	24,500
2011	365	13,365	253	9,958	38	929	656	24,252
2012	354	12,985	270	10,543	36	867	660	24,395
2013	347	12,725	265	10,195	37	865	649	23,785
2014	337	12,355	261	10,050	37	763	635	23,168

Notes:

・"Bulky waste disposal facilities" are the ones to crush and compress into small pieces and also to look for the valuables out of the bulky waste.

・The facilities in this chart are the ones that were built by the municipalities and the consortiums. It excludes the shutdown facilities but include the ones whose constructions started in the indicated fiscal years and the ones temporarily closed just for the indicated year.

・"Crushing": The facilities to crush combustible bulky waste into small pieces for incineration.

・"Compression": The facilities to crush and compress incombustible bulk waste into small pieces.

・"Combination": The facilities to crush both combustible and non-combustible bulky waste.

Source: "Waste Treatment in Japan (an annual report)," Ministry of the Environment

4.10 Development of Recycling Facilities by Prefecture

(Actual FY2014)

	Recycling facilities		Refuse-derived fuel plants		Other facilities		Total		Storage facilities	
	# of Facilities	Reprocessing capacity (t / day)	# of Facilities	Reprocessing capacity (t / day)	# of Facilities	Reprocessing capacity (t / day)	# of Facilities	Reprocessing capacity (t / day)	# of Facilities	Area (m^2)
Hokkaido	111	1,264	8	355	11	314	130	1,933	100	62,295
Aomori	8	365	0	0	0	0	8	365	18	9,525
Iwate	21	260	0	0	1	42	22	302	24	7,193
Miyagi	19	334	0	0	0	0	19	334	19	5,367
Akita	16	265	0	0	0	0	16	265	10	6,784
Yamagata	11	2,345	1	0	1	52	12	2,397	9	3,932
Fukushima	29	358	1	6	0	0	30	365	24	16,045
Ibaraki	25	518	2	277	1	3	28	798	37	17,587
Tochigi	17	429	0	0	1	58	18	487	8	4,379
Gunma	16	222	4	81	0	0	20	303	17	5,015
Saitama	42	1,032	0	0	1	4	43	1,036	41	13,125
Chiba	19	700	0	0	2	40	21	740	30	33,718
Tokyo	23	3,436	0	0	0	0	23	3,436	16	10,713
Kanagawa	25	1,010	0	0	1	150	26	1,160	20	17,736
Niigata	11	398	1	65	0	0	12	463	13	3,914
Toyama	3	33	1	28	0	0	4	61	9	3,506
Ishikawa	11	279	5	367	2	10	18	656	12	19,082
Fukui	9	168	0	0	0	0	9	168	14	6,915
Yamanashi	7	91	0	0	0	0	7	91	3	1,759
Nagano	30	610	0	0	1	20	31	630	33	43,035
Gifu	26	299	1	90	1	4	28	392	26	43,760
Shizuoka	26	295	1	150	0	0	27	445	31	28,184
Aichi	39	747	3	21	1	68	43	836	32	27,986
Mie	37	661	7	485	4	46	48	1,192	32	45,315
Shiga	21	179	1	22	1	8	23	209	17	7,075
Kyoto	15	412	2	55	2	23	19	490	21	5,276
Osaka	21	447	0	0	0	0	21	447	28	13,185
Hyogo	36	454	2	63	1	10	39	527	30	11,619
Nara	17	115	1	35	1	2	19	152	22	9,601
Wakayama	14	174	3	41	0	0	17	215	11	6,199
Tottori	4	135	0	0	0	0	4	135	4	1,663
Shimane	18	229	1	30	2	60	21	319	16	3,081
Okayama	27	251	0	0	0	0	27	251	29	6,347
Hiroshima	30	685	7	550	1	30	38	1,265	41	19,795
Yamaguchi	31	506	5	128	1	3	37	637	29	24,472
Tokushima	12	87	0	0	1	30	13	117	22	8,415
Kagawa	15	217	0	0	0	0	15	217	8	7,297
Ehime	33	1,001	2	34	1	8	36	1,043	16	7,223
Kochi	18	166	2	59	0	0	20	225	29	14,027
Fukuoka	29	669	6	608	4	576	39	1,853	12	4,636
Saga	15	115	1	1	0	0	16	116	14	10,377
Nagasaki	16	209	1	30	2	27	19	266	19	6,033
Kumamoto	27	359	2	133	0	0	29	492	18	10,535
Oita	13	340	2	112	1	32	16	484	13	5,919
Miyazaki	12	261	0	0	2	103	14	364	14	6,245
Kagoshima	27	304	0	0	1	5	28	309	21	10,318
Okinawa	16	297	0	0	0	0	16	297	20	10,914
Total	1,048	23,729	73	3,826	49	1,728	1,169	29,283	1,032	647,121

Note:
・The data in the above table includes the facilities that have started construction and the ones temporarily closed for FY2014, excluding the shutdowns.

Source: Compiled from “Waste Treatment in Japan” (an annual report, FY2014) by Ministry of the Environment

4.11 Development of Bulky Waste Disposal Facilities

(t / day)

	Combination		Crushing		Compression		Total	
	# of Facilities	Capacity (t/day)	# of Facilities	Capacity (t/day)	# of Facilities	Capacity (t/day)	# of Facilities	Capacity (t/day)
FY1978	127	6,386	142	6,948	82	1,892	351	15,226
1979	106	5,885	165	8,468	52	1,836	323	16,189
1980	141	7,529	206	7,716	57	1,540	404	16,785
1981	149	7,827	211	8,159	57	1,399	417	17,385
1982	165	8,011	222	8,247	53	1,021	440	17,279
1983	175	8,413	239	9,907	57	1,152	471	19,472
1984	170	8,125	258	10,833	66	1,333	494	20,291
1985	187	8,712	285	11,107	66	1,343	538	21,162
1986	230	10,865	241	10,372	70	1,456	541	22,693
1987	259	11,953	227	9,853	70	1,473	556	23,279
1988	282	12,485	233	9,875	79	1,681	594	24,041
1989	292	12,952	247	10,167	73	1,695	612	24,814
1990	333	14,413	241	9,802	64	1,509	638	25,724
1991	295	12,653	240	9,778	53	1,243	588	23,674
1992	337	14,529	217	8,674	56	1,259	610	24,462
1993	314	12,977	233	9,355	50	1,113	597	23,445
1994	354	14,518	228	9,436	50	1,096	632	25,050
1995	372	15,541	228	9,020	54	1,156	654	25,717
1996	397	16,350	218	8,773	55	1,159	670	26,281
1997	412	16,839	210	8,339	58	1,276	680	26,454
1998	429	17,201	203	8,728	54	1,071	686	27,000
1999	429	16,928	200	8,375	51	1,149	680	26,452
2000	441	17,181	201	8,201	53	1,226	695	26,608
2001	439	17,038	202	8,702	57	1,611	698	27,350
2002	436	16,695	210	8,804	50	1,331	696	26,830
2003	434	16,644	210	8,413	44	1,388	688	26,445
2004	426	16,435	225	9,023	42	1,045	693	26,503
2005	413	16,247	228	8,900	41	954	682	26,101
2006	391	15,410	251	9,303	39	1,076	681	25,789
2007	390	14,852	247	9,294	39	1,074	676	25,219
2008	376	13,918	245	9,746	41	1,118	662	24,782
2009	368	13,261	250	10,217	43	1,170	661	24,648
2010	368	13,694	247	9,781	38	1,025	653	24,500
2011	365	13,365	253	9,958	38	929	656	24,252
2012	354	12,985	270	10,543	36	867	660	24,395
2013	347	12,725	265	10,195	37	865	649	23,785
2014	337	12,355	261	10,050	37	763	635	23,168

Notes:
・"Bulky waste disposal facility" is defined as a facility to crush and compress into small pieces and also to look for the valuables out of the bulky waste.
・The facilities in the above table are the ones built by the municipalities and the consortiums. There includes the ones whose constructions have started and the ones temporarily closed just for the current year.
・"Crushing": The facilities to crush combustible bulky waste into small pieces for incineration.
"Compression": The facilities to crush and compress incombustible bulk waste into small pieces.
"Combination": The facilities to crush both combustible and non-combustible bulky waste.

Source: "Waste Treatment in Japan (an annual report)," Ministry of the Environment

4.12 Development of Bulky Waste Facilities by Prefecture

(Actual FY2014)

	Combination		Crushing		Compression		Total	
	Number of Facilities	Operating capacities (t / day)	Number of Facilities	Operating capacities (t / day)	Number of Facilities	Operating capacities (t / day)	Number of Facilities	Operating capacities (t / day)
Hokkaido	26	1,079	24	391	2	19	52	1,489
Aomori	3	120	2	60	0	0	5	180
Iwate	8	223	5	80	1	50	14	353
Miyagi	10	438	3	200	0	0	13	638
Akita	7	167	5	108	0	0	12	275
Yamagata	4	177	2	25	0	0	6	202
Fukushima	10	346	5	150	0	0	15	496
Ibaraki	17	588	4	112	3	95	24	795
Tochigi	7	235	2	50	0	0	9	285
Gunma	13	535	0	0	1	20	14	555
Saitama	16	643	15	576	2	60	33	1,279
Chiba	18	1,102	6	279	2	95	26	1,476
Tokyo	13	547	6	688	2	42	21	1,277
Kanagawa	14	578	15	643	3	32	32	1,252
Niigata	13	346	6	116	1	30	20	492
Toyama	1	9	3	90	1	80	5	179
Ishikawa	2	14	1	5	0	0	3	19
Fukui	2	55	4	160	0	0	6	215
Yamanashi	4	135	2	76	0	0	6	211
Nagano	6	163	1	3	0	0	7	166
Gifu	5	200	3	139	1	3	9	342
Shizuoka	8	488	11	338	1	8	20	835
Aichi	11	521	9	634	1	20	21	1,175
Mie	3	44	10	409	0	0	13	453
Shiga	5	182	8	189	1	8	14	379
Kyoto	4	185	5	580	0	0	9	765
Osaka	12	605	16	841	1	22	29	1,468
Hyogo	13	560	12	853	0	0	25	1,413
Nara	8	220	4	123	2	20	14	363
Wakayama	0	0	2	105	2	11	4	116
Tottori	0	0	1	45	0	0	1	45
Shimane	4	91	5	122	4	36	13	249
Okayama	6	182	7	184	0	0	13	366
Hiroshima	7	230	7	169	1	50	15	449
Yamaguchi	3	60	9	284	0	0	12	344
Tokushima	4	51	3	46	0	0	7	97
Kagawa	1	100	0	0	0	0	1	100
Ehime	5	212	5	70	0	0	10	282
Kochi	4	36	1	5	1	3	6	44
Fukuoka	7	189	12	830	2	53	21	1,072
Saga	5	153	0	0	0	0	5	153
Nagasaki	3	180	0	0	0	0	3	180
Kumamoto	5	78	7	73	0	0	12	151
Oita	3	49	1	15	0	0	4	64
Miyazaki	2	45	1	10	0	0	3	55
Kagoshima	12	170	5	62	0	0	17	232
Okinawa	3	24	6	112	2	6	11	142
Total	337	12,355	261	10,050	37	763	635	23,168

Note:

・The facilities in the above table include the ones whose construction started in 2014 and the ones temporarily closed just for the current year, but exclude the shutdowns.

Source: "Waste Treatment in Japan (FY2014)," Ministry of the Environment

4.13 Changes in Total Volume of Final Disposal

	Mountains		Sea surface		Water surface		Flatlands		Total		Final disposal amount (1,000 t/yr.)	Final disposal site remaining volume (billion m³)	Number of remaining years (yr.)
	# of Facilities	Total capacities (1,000 m³)	# of Facilities	Total capacities (1,000 m³)	# of Facilities	Total capacities (1,000 m³)	# of Facilities	Total capacities (1,000 m³)	# of Facilities	Total capacities (1,000 m³)			
FY1978	1,707		39		59		872		2,677	392,565	19,900	2.39	9.8
1979	1,583		39		54		799		2,475	425,761	20,352	2.14	8.6
1980	1,600		36		50		796		2,482	356,109	19,715	1.92	7.9
1981	1,619		40		48		779		2,486	403,156	17,250	1.82	8.6
1982	1,612		36		46		778		2,472	377,583	18,188	1.76	7.9
1983	1,638		34		41		766		2,479	382,728	16,763	1.71	8.3
1984	1,633		37		38		731		2,439	403,062	16,196	1.74	8.8
1985	1,630		38		42		721		2,431	410,096	16,048	1.96	10.0
1986	1,629		36		39		707		2,411	429,895	16,020	2.07	10.6
1987	1,637		31		35		692		2,395	423,858	16,486	1.95	9.7
1988	1,628		35		34		676		2,373	414,278	16,897	1.71	8.3
1989	1,601		34		31		668		2,334	424,535	17,008	1.67	8.0
1990	1,617		33		33		653		2,336	415,622	16,809	1.57	7.6
1991	1,567		31		29		623		2,250	420,219	16,379	1.57	7.8
1992	1,639	269,679	33	101,103	29	2,880	662	62,044	2,363	435,705	15,296	1.54	8.2
1993	1,621	273,033	32	101,818	26	2,560	642	59,862	2,321	437,273	14,959	1.49	8.1
1994	1,675	289,180	31	101,808	26	3,672	660	63,372	2,392	458,032	14,142	1.51	8.7
1995	1,683	293,194	30	100,956	22	3,573	626	64,913	2,361	462,636	13,602	1.42	8.5
1996	1,692	301,166	31	99,679	24	3,548	641	72,624	2,388	477,017	13,093	1.59	9.9
1997	1,620	297,908	33	119,069	24	3,548	589	71,816	2,266	492,341	12,008	1.72	11.7
1998	1,546	300,340	32	119,094	21	3,460	529	70,607	2,128	493,501	11,350	1.78	12.8
1999	1,503	293,985	30	138,303	19	3,438	513	65,442	2,065	501,168	10,869	1.72	12.9
2000	1,520	289,326	30	108,903	18	3,048	509	70,442	2,077	471,719	10,514	1.65	12.8
2001	1,504	287,137	29	110,668	17	2,844	509	68,054	2,059	468,702	9,949	1.60	13.2
2002	1,499	287,712	28	110,637	19	2,924	501	68,127	2,047	469,400	9,030	1.53	13.8
2003	1,491	290,460	27	109,820	17	2,848	504	68,815	2,039	471,943	8,452	1.45	14.0
2004	1,464	286,843	25	92,076	16	2,937	504	67,638	2,009	449,493	8,093	1.38	14.0
2005	1,343	271,340	24	110,787	15	3,061	465	64,423	1,847	449,611	7,328	1.33	14.8
2006	1,346	273,094	25	117,340	13	3,016	469	63,766	1,853	457,217	6,809	1.30	15.6
2007	1,333	272,375	23	100,008	14	13,308	462	63,815	1,832	449,507	6,349	1.22	15.7
2008	1,321	278,832	26	100,264	11	11,177	465	65,515	1,823	455,788	5,531	1.22	18.0
2009	1,298	275,148	28	117,743	9	873	465	67,330	1,800	461,095	5,072	1.16	18.7
2010	1,281	274,539	26	117,479	10	1,119	458	67,473	1,775	460,610	4,837	1.14	19.3
2011	1,274	274,253	26	117,479	9	1,104	463	68,249	1,772	461,086	4,821	1.11	18.9
2012	1,262	272,313	26	117,479	9	1,106	445	68,098	1,742	458,996	4,648	1.12	19.7
2013	1,243	268,486	25	127,112	9	1,106	446	68,124	1,723	464,829	4,538	1.07	19.3
2014	1,223	271,441	26	127,113	9	1,106	440	67,514	1,698	467,174	4,302	1.06	20.1

Notes:

・Facility is defined as final disposal site built by a municipality or a consortium including a one established by Tokyo Metropolitan government, and also including a one of which construction started in an indicated year.

・The number of remaining years represents the period (yrs.) of the site capacity available until it gets filled with landfill waste, without newly developing final disposal sites. It is calculated by the equation of (the residual volume at the end of the fiscal year) ÷ (the final disposal volume of the fiscal year ÷ weight of landfill waste). (Landfill waste density: 0.8163)

・In FY2005, residual volume and remaining years were recalculated retro-respectively; an incremental residual volume in the amount of 7,737,000 m^3 reflecting aerial survey results, and so forth, was added up to that in each year prior to 2005. Accordingly, remaining years for each year were recalculated.

・The facilities in the above table include the ones whose construction started in an indicated fiscal year and the ones temporarily closed just for that year, but exclude the shutdowns.

Source: "Waste Treatment in Japan (an annual report)," Ministry of the Environment

4.14 Development of Final Disposal Sites by Prefecture (1)

(Actual FY2014)

	Mountains				Sea surface				Water surface			
	# of Sites	Landfill area (1,000 ㎥)	Total capacity (1,000 ㎥)	Remaining capacity (1,000 ㎥)	# of Sites	Landfill area (1,000 ㎥)	Total capacity (1,000 ㎥)	Remaining capacity (1,000 ㎥)	# of Sites	Landfill area (1,000 ㎥)	Total capacity (1,000 ㎥)	Remaining capacity (1,000 ㎥)
Hokkaido	128	4,608	40,316	4,910	0	0	0	0	0	0	0	0
Aomori	43	1,174	9,776	1,622	0	0	0	0	0	0	0	0
Iwate	32	608	4,125	935	0	0	0	0	0	0	0	0
Miyagi	33	881	10,039	5,347	0	0	0	0	0	0	0	0
Akita	47	915	7,088	1,146	0	0	0	0	0	0	0	0
Yamagata	8	392	1,948	414	0	0	0	0	0	0	0	0
Fukushima	39	708	6,253	572	0	0	0	0	0	0	0	0
Ibaraki	10	247	1,709	122	0	0	0	0	0	0	0	0
Tochigi	6	156	1,477	366	0	0	0	0	0	0	0	0
Gunma	21	407	3,504	904	0	0	0	0	0	0	0	0
Saitama	8	117	965	238	0	0	0	0	0	0	0	0
Chiba	34	802	6,529	1,272	2	194	1,660	4	0	0	0	0
Tokyo	17	544	8,810	1,555	2	3,600	93,150	21,944	0	0	0	0
Kanagawa	20	255	2,664	478	3	632	9,857	1,834	0	0	0	0
Niigata	27	501	5,840	418	0	0	0	0	0	0	0	0
Toyama	13	211	2,276	611	0	0	0	0	0	0	0	0
Ishikawa	21	636	7,351	1,903	0	0	0	0	0	0	0	0
Fukui	15	176	1,108	450	1	10	56	22	0	0	0	0
Yamanashi	2	41	350	0	0	0	0	0	0	0	0	0
Nagano	47	511	3,356	782	0	0	0	0	0	0	0	0
Gifu	43	751	7,664	1,597	0	0	0	0	2	23	78	43
Shizuoka	50	691	5,908	1,129	0	0	0	0	1	20	246	25
Aichi	39	1,021	10,882	1,850	2	14	116	96	0	0	0	0
Mie	34	727	7,385	1,550	0	0	0	0	0	0	0	0
Shiga	17	254	2,033	213	0	0	0	0	3	132	443	6
Kyoto	32	760	8,935	4,014	0	0	0	0	0	0	0	0
Osaka	6	223	2,088	328	1	731	11,690	2,192	0	0	0	0
Hyogo	33	1,886	34,146	11,670	1	14	43	14	0	0	0	0
Nara	9	195	1,790	835	0	0	0	0	0	0	0	0
Wakayama	17	268	1,599	357	0	0	0	0	0	0	0	0
Tottori	2	78	937	207	0	0	0	0	0	0	0	0
Shimane	29	302	2,266	665	0	0	0	0	0	0	0	0
Okayama	36	610	4,693	856	0	0	0	0	0	0	0	0
Hiroshima	24	507	5,973	1,376	1	184	1,003	0	0	0	0	0
Yamaguchi	33	295	2,495	462	6	257	1,785	941	3	74	340	74
Tokushima	10	57	298	84	1	20	87	13	0	0	0	0
Kagawa	19	386	3,281	604	0	0	0	0	0	0	0	0
Ehime	28	473	3,785	978	2	24	363	355	0	0	0	0
Kochi	22	204	1,629	595	0	0	0	0	0	0	0	0
Fukuoka	24	747	9,380	3,618	1	573	7,150	1,649	0	0	0	0
Saga	12	126	674	240	0	0	0	0	0	0	0	0
Nagasaki	26	429	4,744	1,944	1	17	40	8	0	0	0	0
Kumamoto	15	309	4,095	1,237	1	2	6	0	0	0	0	0
Oita	13	535	5,458	1,003	0	0	0	0	0	0	0	0
Miyazaki	18	452	4,232	799	0	0	0	0	0	0	0	0
Kagoshima	55	724	9,144	2,999	0	0	0	0	0	0	0	0
Okinawa	6	58	444	182	1	13	107	63	0	0	0	0
Total	1,223	26,956	271,441	65,437	26	6,285	127,113	29,135	9	249	1,106	148

Note: The facilities in the above table include the ones whose construction started in 2014 and the ones temporarily closed just for the current year, but excludes the shutdowns.

4.14 Development of Final Disposal Sites by Prefecture (2)

(Actual FY2014)

	Flatlands				Total			
	# of Sites	Landfill area (1,000 ㎥)	Total capacity (1,000 ㎥)	Remaining capacity (1,000 ㎥)	# of Sites	Landfill area (1,000 ㎥)	Total capacity (1,000 ㎥)	Remaining capacity (1,000 ㎥)
Hokkaido	56	3,038	21,844	3,135	184	7,646	62,160	8,045
Aomori	8	141	704	149	51	1,315	10,480	1,771
Iwate	1	11	69	6	33	619	4,195	941
Miyagi	0	0	0	0	33	881	10,039	5,347
Akita	17	365	1,254	359	64	1,281	8,342	1,505
Yamagata	4	136	787	212	12	527	2,735	626
Fukushima	8	151	875	246	47	859	7,128	818
Ibaraki	7	108	779	259	17	355	2,488	381
Tochigi	4	53	246	89	10	209	1,724	455
Gunma	11	189	1,032	259	32	595	4,537	1,163
Saitama	37	513	2,560	653	45	630	3,524	891
Chiba	22	359	2,082	254	58	1,354	10,270	1,530
Tokyo	1	65	639	72	20	4,210	102,599	23,571
Kanagawa	8	605	8,532	380	31	1,492	21,053	2,692
Niigata	20	342	1,620	809	47	844	7,461	1,227
Toyama	0	0	0	0	13	211	2,276	611
Ishikawa	0	0	0	0	21	636	7,351	1,903
Fukui	1	9	37	1	17	195	1,201	474
Yamanashi	3	41	197	0	5	81	547	0
Nagano	22	180	1,078	243	69	691	4,433	1,026
Gifu	26	252	1,176	169	71	1,026	8,917	1,808
Shizuoka	15	203	792	190	66	914	6,946	1,345
Aichi	42	1,011	8,060	844	83	2,046	19,057	2,790
Mie	5	104	401	61	39	831	7,786	1,610
Shiga	12	303	1,422	204	32	689	3,898	423
Kyoto	1	38	318	70	33	797	9,253	4,084
Osaka	4	72	352	111	11	1,026	14,129	2,631
Hyogo	7	196	1,842	515	41	2,096	36,031	12,200
Nara	1	27	264	0	10	222	2,054	835
Wakayama	0	0	0	0	17	268	1,599	357
Tottori	1	18	56	19	3	96	993	226
Shimane	5	37	153	104	34	339	2,419	768
Okayama	10	251	856	65	46	861	5,549	921
Hiroshima	5	294	2,289	375	30	985	9,265	1,751
Yamaguchi	5	132	693	92	47	759	5,312	1,568
Tokushima	10	143	1,055	114	21	219	1,439	211
Kagawa	2	110	320	17	21	496	3,601	621
Ehime	1	2	5	0	31	499	4,154	1,334
Kochi	5	14	45	9	27	217	1,674	604
Fukuoka	8	66	338	113	33	1,386	16,868	5,380
Saga	3	161	493	125	15	286	1,167	365
Nagasaki	13	64	228	118	40	510	5,012	2,070
Kumamoto	3	54	221	54	19	365	4,322	1,292
Oita	2	65	280	47	15	601	5,739	1,050
Miyazaki	5	49	230	57	23	501	4,461	855
Kagoshima	6	482	321	59	61	1,206	9,465	3,058
Okinawa	13	132	969	446	20	202	1,520	691
Total	440	10,587	67,514	11,104	1,698	44,077	467,174	105,824

Source: Compiled from “Waste Treatment in Japan” (for FY2014） by Ministry of the Environment

4.15 Changes in Annual Expenses for the Waste Management

(Unit: JPY million)

				FY2003	2004	2005	2006	2007	2008	2009	2010	2011	2012	2013	2014
Population (Unit: 1,000)				127,507	127,606	127,712	127,781	127,487	127,530	127,429	127,302	127,147	128,622	128,394	128,181
Revenue (for municipalities)	Total			1,750,387	1,709,195	1,683,421	1,862,654	1,859,902	1,823,476	1,832,022	1,838,976	1,790,511	1,789,097	1,851,007	1,943,149
	General budget			1,411,268	1,353,531	1,357,926	1,350,754	1,345,236	1,343,986	1,340,785	1,352,056	1,293,130	1,288,579	1,284,848	1,318,635
	Specific revenue sources	National treasury disbursement		37,276	50,178	31,033	56,650	46,752	37,099	47,880	50,662	38,467	50,324	70,529	82,379
		Prefectural treasury disbursement		6,072	8,448	5,462	5,406	5,370	5,068	6,651	8,632	9,167	6,593	9,198	7,045
		Usage fees, charges		144,119	152,860	166,229	231,113	234,965	235,077	230,928	231,863	234,256	239,669	249,149	248,360
		Municipal bonds		91,539	76,539	61,551	125,949	107,184	85,012	99,293	82,206	94,109	82,502	99,042	130,535
		Other		60,113	67,640	61,220	92,781	120,395	117,234	106,484	113,558	121,381	121,430	138,241	156,194
		Subtotal		339,119	355,665	325,495	511,900	514,666	479,490	491,236	486,920	497,381	500,518	566,159	624,514
Expenses (the sum of municipalities and cooperatives)	Waste management expenses			1,960,037	1,934,330	1,902,500	1,862,654	1,859,902	1,816,944	1,825,588	1,838,976	1,790,372	1,788,541	1,851,007	1,943,149
	Construction improvement costs	Construction costs	Collection and transportation facilities	—	—	—	26,182	3,130	1,873	3,037	1,539	1,176	2,718	3,308	3,315
			Intermediate processing	260,994	214,516	207,294	164,470	177,530	153,068	173,406	151,144	157,111	172,961	217,052	264,109
			Final disposal sites	62,110	71,692	62,040	42,114	23,966	17,096	19,356	24,031	23,323	23,799	23,482	28,326
			Others	12,844	12,117	10,276	7,302	4,777	4,230	5,071	8,483	5,158	5,085	8,754	12,855
		Inspection fees		6,104	3,450	2,796	4,277	3,188	3,430	3,356	3,769	4,782	4,237	4,874	3,525
		Subtotal		342,052	301,774	279,610	244,344	212,591	179,696	204,227	188,965	191,549	208,801	257,470	312,129
		*Note) Allotted charges to partial-affairs-association		37,009	38,136	31,318	24,852	24,967	27,357	24,848	20,810	20,230	31,044	42,175	42,239
	Processing, Maintenance and Operation costs	Personnel cost		561,777	550,043	534,988	522,187	519,282	495,676	473,014	488,464	438,448	416,013	398,352	392,186
		Processing costs	Collection and transportation facilities	77,212	78,861	75,538	67,048	71,687	65,967	63,975	64,792	61,618	60,437	57,187	55,592
			Intermediate processing	277,061	283,153	277,656	277,683	284,230	285,512	273,069	268,864	271,938	262,107	266,012	267,942
			Final disposal sites	36,770	36,140	28,825	29,817	31,756	34,624	33,288	36,714	34,693	32,751	34,490	35,362
		Purchases cost of vehicles and other supplies		10,105	7,702	8,016	7,329	5,933	6,792	7,959	4,855	8,066	7,518	5,478	5,327
		Outsourcing fees	Collection and transportation facilities	—	—	268,980	277,128	279,929	292,206	300,504	300,959	305,142	310,861	322,076	338,428
			Intermediate processing	—	—	238,779	254,516	264,068	279,650	287,098	294,342	298,755	307,319	315,982	339,650
			Final disposal sites	—	—	47,949	48,543	52,948	46,911	44,140	43,036	42,675	45,968	52,514	52,110
			Others	—	—	29,053	22,999	25,167	21,386	21,393	22,766	22,168	21,262	20,716	24,742
			Outsourcing expenses	529,341	545,482	584,761	603,186	622,112	640,152	653,134	661,102	668,739	685,411	711,287	754,930
		Others		43,950	43,210	—	—	—	—	—	—	—	—	—	—
		Survey and Research costs		—	—	3,918	1,575	1,222	1,426	1,167	1,173	1,277	961	997	1,106
		Subtotal		1,536,216	1,544,591	1,513,702	1,508,825	1,536,223	1,530,149	1,505,606	1,525,964	1,484,779	1,465,199	1,473,803	1,512,445
		*Note) Allotted charges to partial-affairs-association		285,904	272,923	250,682	241,279	243,117	247,728	249,676	234,946	236,950	239,549	241,806	240,467
	Other			81,769	87,964	106,392	109,485	111,088	107,100	115,756	124,047	114,043	114,542	119,734	118,574
Annual expenses for Waste Management Project (on a per capita basis)				15,400	15,200	14,900	14,600	14,600	14,200	14,300	14,400	14,100	13,900	14,400	15,200

Note:
・"Allotted charges to partial-affairs-association" is an allotment to municipalities that the partial-affairs-association are comprised of and payable to it. As the charges are used for the expenses for waste management by the association, the charges are not included in total.

Source: "Waste Treatment in Japan （an annual report）," Ministry of the Environment

4.16 Changes in Annual Expenditures for Waste Management Program

(Unit: 100 million yen)

FY1982	12,697
1983	13,075
1984	13,213
1985	13,545
1986	13,926
1987	14,427
1988	14,493
1989	16,190
1990	17,563
1991	19,986
1992	22,663
1993	27,404
1994	26,269
1995	26,542
1996	26,990
1997	26,654
1998	26,694
1999	26,519
2000	27,381
2001	29,464
2002	27,309
2003	22,746
2004	22,450
2005	22,161
2006	21,344
2007	21,060
2008	20,557
2009	20,572
2010	20,605
2011	20,167
2012	20,052
2013	20,715
2014	21,683

Note:
Expenditure of waste management program = Waste management expenses + night-soil disposal expenses

Source: "Waste Treatment in Japan （an annual report）," Ministry of the Environment

4.17 Flow of treatment for industrial waste

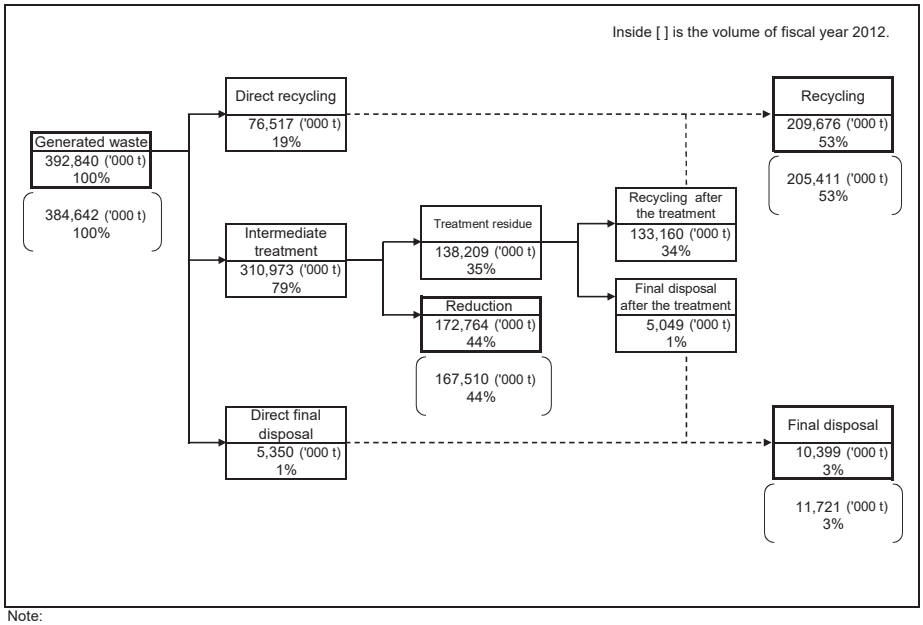

Note:
* Figures for each item are rounded off; therefore, the total may not equal the sum of breakdown.

Source: "An field survey of the industrial waste disposals & Research of recycling processes (for 2014)," Ministry of the Environment

4.18 Generation of Industrial Waste by Industrial Sector (1)

Industrial sector	FY1975 Generated volume (1,000 t)	FY1975 Percentage (%)	1980 Generated volume (1,000 t)	1980 Percentage (%)	1985 Generated volume (1,000 t)	1985 Percentage (%)	1990 Generated volume (1,000 t)	1990 Percentage (%)	1991 Generated volume (1,000 t)	1991 Percentage (%)	1992 Generated volume (1,000 t)	1992 Percentage (%)	1993 Generated volume (1,000 t)	1993 Percentage (%)
Agriculture	41,319	17.5	49,913	17.1	62,690	20.1	77,390	19.6	77,495	19.5	76,642	19.0	75,761	19.1
Forestry	—	—	—	—	0	0.0	0	0.0	0	0.0	0	0.0	0	0.0
Fishery	—	—	—	—	12	0.0	61	0.0	234	0.1	64	0.0	40	0.0
Mining	12,527	5.3	37,006	12.7	26,017	8.3	34,000	8.6	34,802	8.7	26,541	6.6	29,173	7.4
Construction	33,871	14.3	30,416	10.4	57,481	18.4	71,139	18.0	77,105	19.4	85,715	21.2	81,605	20.6
Manufacturing	135,707	57.4	159,773	54.7	132,324	42.4	150,388	38.1	143,711	36.1	141,000	34.9	134,657	33.9
Food	8,962	3.8	13,697	4.7	12,093	3.9	11,862	3.0	11,500	2.9	12,027	3.0	10,847	2.7
Beverages, tobacco and feedstuff							4,621	1.2	4,828	1.2	5,514	1.4	5,215	1.3
Textile industry (garment and other textile products -- classified separately before 2007)	6,435	2.7	4,658	1.6	2,629	0.8	1,907	0.5	2,202	0.6	2,084	0.5	1,879	0.5
Garment and other textile products (*consolidated into "Textile industry" after 2008)	—	—	76	0.0	115	0.0	137	0.0	181	0.0	225	0.1	196	0.0
Lumber and wood products	4,879	2.1	4,919	1.7	4,034	1.3	3,439	0.9	3,460	0.9	3,665	0.9	3,312	0.8
Furniture and fixture	825	0.3	886	0.3	425	0.1	477	0.1	497	0.1	604	0.1	466	0.1
Pulp, paper, and paper products	9,947	4.2	13,628	4.7	12,800	4.1	27,502	7.0	21,213	5.3	27,208	6.7	29,373	7.4
Printing and related business	620	0.3	1,033	0.4	870	0.3	745	0.2	483	0.1	722	0.2	784	0.2
Chemical industry	6,875	2.9	10,594	3.6	10,364	3.3	12,624	3.2	11,949	3.0	11,414	2.8	14,986	3.8
Petroleum and coal products	4,396	1.9	1,014	0.3	2,482	0.8	1,017	0.3	1,158	0.3	1,096	0.3	801	0.2
Plastic products	—	—	—	—	—	—	629	0.2	767	0.2	829	0.2	1,246	0.3
Rubber products	162	0.1	195	0.1	290	0.1	271	0.1	318	0.1	336	0.1	294	0.1
Leather-tanning, leather products and fur skins	—	—	195	0.1	263	0.1	153	0.0	174	0.0	151	0.0	147	0.0
Cement and ceramic industry	12,660	5.4	18,452	6.3	17,941	5.7	17,492	4.4	17,566	4.4	17,025	4.2	17,250	4.3
Iron and steel industry	64,142	27.1	65,284	22.3	50,098	16.0	48,561	12.3	48,346	12.1	38,443	9.5	30,934	7.8
Non-ferrous metals	4,550	1.9	9,635	3.3	2,150	0.7	4,196	1.1	4,249	1.1	4,131	1.0	2,742	0.7
Metal products	2,506	1.1	4,407	1.5	4,452	1.4	4,835	1.2	4,841	1.2	4,547	1.1	3,941	1.0
General machinery and equipment	2,155	0.9	2,571	0.9	2,152	0.7	1,750	0.4	1,781	0.4	1,579	0.4	1,590	0.4
Electrical machinery and equipment Telecommunications machinery and equipment Electronic, components and devices	1,089	0.5	3,115	1.1	3,811	1.2	3,737	0.9	3,870	1.0	4,282	1.1	3,768	0.9
Machinery and equipment for transportation	4,284	1.8	4,573	1.6	4,450	1.4	3,848	1.0	3,746	0.9	4,537	1.1	4,003	1.0
Precision machinery and equipment	139	0.1	217	0.1	177	0.1	230	0.1	239	0.1	199	0.0	178	0.0
Arms	—	—	26	0.0	—	—	35	0.0	—	—	—	—	—	—
Others	1,081	0.5	599	0.2	729	0.2	320	0.1	343	0.1	382	0.1	705	0.2
Electric, gas, heat supply, and water supply industries	5,189	2.2	8,301	2.8	27,748	8.9	54,983	13.9	57,789	14.5	65,456	16.2	67,488	17.0
Information and telecommunications industry, transport industry	457	0.2	1,252	0.4	582	0.2	512	0.1	946	0.2	1,562	0.4	656	0.2
Wholesaler, retailer, accommodations, drinking and eating services	5,959	2.5	3,830	1.3	3,441	1.1	4,054	1.0	3,882	1.0	3,534	0.9	4,386	1.1
Medical care and welfare	—	—	—	—	—	—	—	—	—	—	—	—	—	—
Education, learning support, complex services, and service industry	1,413	0.6	1,820	0.6	1,476	0.5	2,198	0.6	1,894	0.5	2,143	0.5	2,669	0.7
Public service	—	—	—	—	500	0.2	12	0.0	89	0.0	820	0.0	433	0.1
Total	236,442	100.0	292,311	100.0	312,271	100.0	394,736	100.0	397,949	100.0	403,480	100.0	396,869	100.0

Industrial sector	FY1994 Generated volume (1,000 t)	FY1994 Percentage (%)	1995 Generated volume (1,000 t)	1995 Percentage (%)	1996 Generated volume (1,000 t)	1996 Percentage (%)	1997 Generated volume (1,000 t)	1997 Percentage (%)	1998 Generated volume (1,000 t)	1998 Percentage (%)	1999 Generated volume (1,000 t)	1999 Percentage (%)	2000 Generated volume (1,000 t)	2000 Percentage (%)
Agriculture	74,878	18.5	73,336	18.6	72,517	17.9	93,995	22.7	92,973	22.8	91,855	23.0	90,804	22.4
Forestry	0	0.0	0	0.0	0	0.0	0	0.0	0	0.0	0	0.0	0	0.0
Fishery	71	0.0	68	0.0	58	0.0	43	0.0	42	0.0	28	0.0	24	0.0
Mining	30,793	7.6	27,717	7.0	27,999	6.9	23,515	5.7	20,334	5.0	17,655	4.4	16,751	4.1
Construction	76,931	19.0	75,201	19.1	77,138	19.1	77,142	18.6	79,071	19.4	76,236	19.1	79,011	19.5
Manufacturing	139,033	34.3	130,910	33.2	136,563	33.8	126,028	30.4	125,045	30.6	120,046	30.0	123,730	30.5
Food	11,856	2.9	10,514	2.7	11,696	2.9	10,626	2.6	10,940	2.7	10,999	2.8	10,639	2.6
Beverages, tobacco and feedstuff	7,377	1.8	6,253	1.6	5,331	1.3	3,972	1.0	4,608	1.1	4,566	1.1	4,692	1.2
Textile industry (garment and other textile products -- classified separately before 2007)	1,457	0.4	1,483	0.4	2,550	0.6	2,440	0.6	2,337	0.6	2,070	0.5	1,219	0.3
Garment and other textile products (*consolidated into "Textile industry" after 2008)	179	0.0	190	0.0	198	0.0	165	0.0	132	0.0	119	0.0	124	0.0
Lumber and wood products	4,377	1.1	3,989	1.0	4,071	1.0	3,346	0.8	1,998	0.5	1,879	0.5	1,627	0.4
Furniture and fixture	468	0.1	468	0.1	464	0.1	381	0.1	392	0.1	368	0.1	345	0.1
Pulp, paper, and paper products	24,917	6.1	25,879	6.6	28,296	7.0	27,080	6.5	26,054	6.4	26,284	6.6	27,058	6.7
Printing and related business	846	0.2	953	0.2	1,083	0.3	1,028	0.2	1,217	0.3	1,216	0.3	1,198	0.3
Chemical industry	17,928	4.4	18,807	4.8	17,840	4.4	16,487	4.0	14,630	3.6	16,440	4.1	16,863	4.2
Petroleum and coal products	812	0.2	730	0.2	808	0.2	755	0.2	994	0.2	1,020	0.3	1,231	0.3
Plastic products	1,321	0.3	1,276	0.3	1,421	0.4	1,269	0.3	923	0.2	959	0.2	964	0.2
Rubber products	282	0.1	303	0.1	314	0.1	306	0.1	364	0.1	372	0.1	387	0.1
Leather-tanning, leather products and fur skins	156	0.0	138	0.0	157	0.0	104	0.0	78	0.0	100	0.0	91	0.0
Cement and ceramic industry	19,425	4.8	15,738	4.0	15,791	3.9	15,373	3.7	13,118	3.2	11,564	2.9	12,532	3.1
Iron and steel industry	30,081	7.4	27,051	6.9	28,033	6.9	24,056	5.8	29,527	7.2	25,389	6.4	26,598	6.6
Non-ferrous metals	3,416	0.8	3,578	0.9	3,794	0.9	4,488	1.1	4,086	1.0	3,353	0.8	4,114	1.0
Metal products	3,771	0.9	3,103	0.8	3,470	0.9	3,204	0.8	3,762	0.9	3,573	0.9	3,506	0.9
General machinery and equipment	1,576	0.4	1,834	0.5	1,721	0.4	1,610	0.4	1,699	0.4	1,602	0.4	1,812	0.4
Electrical machinery and equipment Telecommunications machinery and equipment Electronic, components and devices	3,741	0.9	3,621	0.9	4,092	1.0	4,082	1.0	3,835	0.9	3,932	1.0	4,729	1.2
Machinery and equipment for transportation	3,992	1.0	4,018	1.0	4,163	1.0	4,413	1.1	3,787	0.9	3,873	1.0	3,582	0.9
Precision machinery and equipment	179	0.0	221	0.0	228	0.1	216	0.1	246	0.1	149	0.0	168	0.0
Arms	—	—	—	—	—	—	—	—	—	—	—	—	—	—
Others	876	0.2	762	0.2	1,043	0.3	626	0.2	317	0.1	219	0.1	206	0.1
Electric, gas, heat supply, and water supply industries	74,610	18.4	77,635	19.7	79,970	19.8	86,371	20.8	87,458	21.4	90,220	22.6	91,504	22.5
Information and telecommunications industry, transport industry	1,054	0.3	971	0.2	1,102	0.3	705	0.2	509	0.1	498	0.1	888	0.2
Wholesaler, retailer, accommodations, drinking and eating services	5,454	1.3	5,716	1.5	5,689	1.4	5,227	1.3	1,476	0.4	1,664	0.4	1,790	0.4
Medical care and welfare	—	—	—	—	—	—	—	—	—	—	—	—	—	—
Education, learning support, complex services, and service industry	2,200	0.5	2,245	0.6	3,546	0.9	1,793	0.4	1,544	0.4	1,566	0.4	1,512	0.4
Public service	429	0.1	12	0.0	21	0.0	34	0.0	39	0.0	31	0.0	22	0.0
Total	405,455	100.0	393,812	100.0	404,602	100.0	414,854	100.0	408,490	100.0	399,799	100.0	406,037	100.0

4.18 Generation of Industrial Waste by Industrial Sector (2)

Industrial sector	FY2001		2002		2003		2004		2005		2006		2007	
	Generated volume (1,000 t)	Percentage (%)	Generated volume (1,000 t)	Percentage (%)	Generated volume (1,000 t)	Percentage (%)	Generated volume (1,000 t)	Percentage (%)	Generated volume (1,000 t)	Percentage (%)	Generated volume (1,000 t)	Percentage (%)	Generated volume (1,000 t)	Percentage (%)
Agriculture	90,430	22.6	90,147	22.9	90,589	22.0	89,285	21.4	87,543	20.8	87,924	21.0	87,811	20.9
Forestry	0	0.0	0	0.0	0	0.0	0	0.0	0	0.0	0	0.0	0	0.0
Fishery	29	0.0	14	0.0	13	0.0	16	0.0	40	0.0	21	0.0	25	0.0
Mining	13,772	3.4	12,409	3.2	13,945	3.4	13,393	3.2	14,039	3.3	13,947	3.3	12,509	3.0
Construction	76,151	19.0	73,510	18.7	75,006	18.2	79,055	19.0	76,466	18.1	77,534	18.5	77,253	18.4
Manufacturing	122,883	30.7	122,551	31.2	135,090	32.8	137,422	32.9	141,628	33.6	137,338	32.8	141,613	33.8
Food	10,829	2.7	10,104	2.6	10,201	2.5	9,789	2.3	9,805	2.3	9,720	2.3	9,812	2.3
Beverages, tobacco and feedstuff	4,682	1.2	4,743	1.2	4,098	1.0	4,339	1.0	3,219	0.8	3,147	0.8	3,168	0.8
Textile industry (garment and other textile products --- classified separately before 2007)	1,127	0.3	1,046	0.3	916	0.2	952	0.2	934	0.2	823	0.2	766	0.2
Garment and other textile products (*consolidated into "Textile industry" after 2008)	109	0.0	100	0.0	104	0.0	108	0.0	124	0.0	111	0.0	115	0.0
Lumber and wood products	1,634	0.4	1,439	0.4	1,864	0.5	1,661	0.4	1,550	0.4	1,458	0.3	1,405	0.3
Furniture and fixture	332	0.1	303	0.1	325	0.1	307	0.1	269	0.1	252	0.1	320	0.1
Pulp, paper, and paper products	27,138	6.8	30,402	7.7	36,601	8.9	36,776	8.8	35,493	8.4	33,872	8.1	35,479	8.5
Printing and related business	1,239	0.3	1,175	0.3	1,114	0.3	910	0.2	1,069	0.3	980	0.2	960	0.2
Chemical industry	16,887	4.2	16,792	4.3	19,398	4.7	16,887	4.0	16,796	4.0	17,209	4.1	17,578	4.2
Petroleum and coal products	1,259	0.3	1,428	0.4	1,457	0.4	1,425	0.3	1,764	0.4	1,802	0.4	1,572	0.4
Plastic products	928	0.2	964	0.2	1,050	0.3	1,198	0.3	1,150	0.3	1,277	0.3	1,297	0.3
Rubber products	361	0.1	362	0.1	310	0.1	334	0.1	316	0.1	329	0.1	394	0.1
Leather-tanning, leather products and fur skins	90	0.0	96	0.0	141	0.0	80	0.0	66	0.0	63	0.0	58	0.0
Cement and ceramic industry	12,174	3.0	10,862	2.8	10,464	2.5	9,561	2.3	9,949	2.4	9,594	2.3	10,097	2.4
Iron and steel industry	26,450	6.6	26,503	6.7	30,724	7.5	37,300	8.9	43,176	10.2	38,375	9.2	38,266	9.1
Non-ferrous metals	3,994	1.0	3,732	0.9	3,768	0.9	3,507	0.8	3,556	0.8	4,124	1.0	4,891	1.2
Metal products	3,479	0.9	3,266	0.8	2,406	0.6	2,484	0.6	2,323	0.6	3,487	0.8	3,576	0.9
General machinery and equipment	1,743	0.4	1,418	0.4	1,551	0.4	1,700	0.4	1,739	0.4	1,848	0.4	2,172	0.5
Electrical machinery and equipment Telecommunications machinery and equipment	4,251	1.1	3,617	0.9	4,094	1.0	3,726	0.9	3,856	0.9	4,768	1.1	5,149	1.2
Machinery and equipment for transportation	3,791	0.9	3,862	1.0	4,132	1.0	3,486	0.8	3,615	0.9	3,506	0.8	3,911	0.9
Precision machinery and equipment	169	0.0	155	0.0	182	0.0	165	0.0	221	0.1	194	0.0	263	0.1
Arms	—	—	—	—	—	—	—	—	—	—	—	—	—	—
Others	215	0.1	182	0.0	190	0.0	727	0.2	640	0.2	397	0.1	366	0.1
Electric, gas, heat supply, and water supply industries	93,145	23.3	89,743	22.8	92,248	22.4	92,362	22.1	97,068	23.0	97,080	23.2	95,810	22.8
Information and telecommunications industry, transport industry	804	0.2	1,152	0.3	1,084	0.3	1,362	0.3	834	0.2	889	0.2	697	0.2
Wholesaler, retailer, accommodations, drinking and eating services	1,478	0.4	1,526	0.4	1,551	0.4	2,193	0.5	2,010	0.5	1,671	0.4	1,683	0.4
Medical care and welfare	—	—	260	0.1	268	0.1	253	0.1	329	0.1	237	0.1	249	0.1
Education, learning support, complex services, and service industry	1,530	0.4	1,900	0.5	1,814	0.4	1,644	0.4	1,637	0.4	1,739	0.4	1,744	0.4
Public service	21	0.0	23	0.0	15	0.0	171	0.0	83	0.0	29	0.0	30	0.0
Total	400,243	100.0	393,234	100.0	411,623	100.0	417,156	100.0	421,677	100.0	418,497	100.0	419,425	100.0

4.18 Generation of Industrial Waste by Industrial Sector (3)

Industrial sector	FY2008 Generated volume (1,000 t)	FY2008 Percentage (%)	2009 Generated volume (1,000 t)	2009 Percentage (%)	2010 Generated volume (1,000 t)	2010 Percentage (%)	2011 Generated volume (1,000 t)	2011 Percentage (%)	2012 Generated volume (1,000 t)	2012 Percentage (%)	2013 Generated volume (1,000 t)	2013 Percentage (%)	2014 Generated volume (1,000 t)	2014 Percentage (%)
Agriculture＆Forestry	87,974	21.8	88,410	22.7	85,090	22.0	84,710	22.2	85,721	22.6	82,963	21.6	81,902	20.8
Fishery	17	0.0	36	0.0	18	0.0	15	0.0	7	0.0	9	0.0	6	0.0
Mining	12,866	3.2	13,865	3.6	11,577	3.0	10,466	2.7	9,481	2.5	8,785	2.3	9,086	2.3
Construction	76,465	18.9	73,640	18.9	73,211	19.0	75,395	19.8	74,124	19.6	80,348	20.9	81,614	20.8
Manufacturing	124,899	30.9	113,205	29.0	115,813	30.0	110,898	29.1	108,970	28.7	109,470	28.5	112,404	28.6
Food	9,041	2.2	9,135	2.3	8,524	2.2	8,626	2.3	8,484	2.2	8,650	2.2	9,178	2.3
Beverages, tobacco and feedstuff	3,280	0.8	3,458	0.9	3,140	0.8	2,970	0.8	2,864	0.8	2,649	0.7	2,886	0.7
Textile industry (garment and other textile products -- classified separately before 2007)	812	0.2	986	0.3	634	0.2	625	0.2	604	0.2	768	0.2	836	0.2
Garment and other textile products (*consolidated into "Textile industry" after 2008)	–	–	–	–					–	–			–	
Lumber and wood products	1,096	0.3	913	0.2	691	0.2	648	0.2	626	0.2	846	0.2	842	0.2
Furniture and fixture	247	0.1	228	0.1	214	0.1	217	0.1	329	0.1	194	0.1	242	0.1
Pulp, paper, and paper products	33,583	8.3	34,170	8.8	33,405	8.7	29,895	7.8	28,996	7.6	30,441	7.9	32,612	8.3
Printing and related business	727	0.2	653	0.2	624	0.2	558	0.1	1,272	0.3	522	0.1	548	0.1
Chemical industry	14,216	3.5	13,253	3.4	13,890	3.6	13,373	3.5	12,913	3.2	12,807	3.3	11,896	3.0
Petroleum and coal products	1,356	0.3	975	0.3	924	0.2	1,003	0.3	2,166	0.6	1,133	0.3	1,318	0.3
Plastic products	1,061	0.3	982	0.3	1,117	0.3	1,091	0.3	992	0.3	1,019	0.3	990	0.3
Rubber products	262	0.1	279	0.1	300	0.1	301	0.1	330	0.1	254	0.1	250	0.1
Leather-tanning, leather products and fur skins	105	0.0	189	0.0	64	0.0	57	0.0	84	0.0	42	0.0	44	0.0
Cement and ceramic industry	8,529	2.1	8,510	2.2	8,987	2.3	8,779	2.3	7,129	1.9	7,603	2.0	8,941	2.3
Iron and steel industry	31,955	7.9	24,898	6.4	28,634	7.4	28,249	7.4	28,655	7.6	30,755	8.0	28,637	7.3
Non-ferrous metals	3,848	1.0	2,382	0.6	2,567	0.7	2,494	0.7	3,352	0.9	1,479	0.4	1,287	0.3
Metal products	2,354	0.6	2,950	0.8	2,054	0.5	1,951	0.5	2,309	0.6	2,042	0.5	2,289	0.6
General machinery and equipment, Others	4,128	1.0	2,243	0.6	2,577	0.7	2,871	0.8	2,681	0.7	2,287	0.6	2,431	0.7
Electrical machinery and equipment Telecommunications machinery and equipment Electronic, components and devices	4,823	1.2	4,067	1.0	4,339	1.1	4,106	1.1	3,625	1.0	3,341	0.9	4,061	1.0
Machinery and equipment for transportation	3,475	0.9	2,935	0.8	3,128	0.8	3,083	0.8	2,277	0.6	2,639	0.7	3,118	0.8
Electric, gas, heat supply, and water supply industries	96,283	23.9	96,371	24.7	95,572	24.8	95,576	25.1	96,473	25.4	97,936	25.5	101,032	25.7
Information and telecommunications industry, transport industry	762	0.2	823	0.2	759	0.2	691	0.1	810	0.2	1,005	0.3	894	0.2
Wholesaler, retailer, accommodations, drinking and eating services	1,892	0.5	1,671	0.4	1,833	0.5	1,762	0.5	1,715	0.5	1,890	0.5	2,148	0.6
Medical care and welfare	534	0.1	465	0.1	447	0.1	138	0.0	384	0.1	515	0.1	360	0.1
Education, learning support, complex services, and service industry	1,795	0.4	1,184	0.3	1,542	0.4	1,138	0.3	1,385	0.3	1,594	0.4	2,661	0.6
Public service	174	0.0	77	0.0	127	0.0	96	0.0	67	0.0	128	0.0	259	0.1
Total	403,661	100.0	389,746	100.0	385,988	100.0	381,206	100.0	379,137	100.0	384,642	100.0	392,840	100.0

Notes:
* The sum of the industrial waste to each industry may not be exactly the same as that of the total figures due to rounding.
* Because of the revision of Japan Standard Industrial Classification, the new industrial classification has been used since 2008.

Industrial classification comparison between the New and the Previous

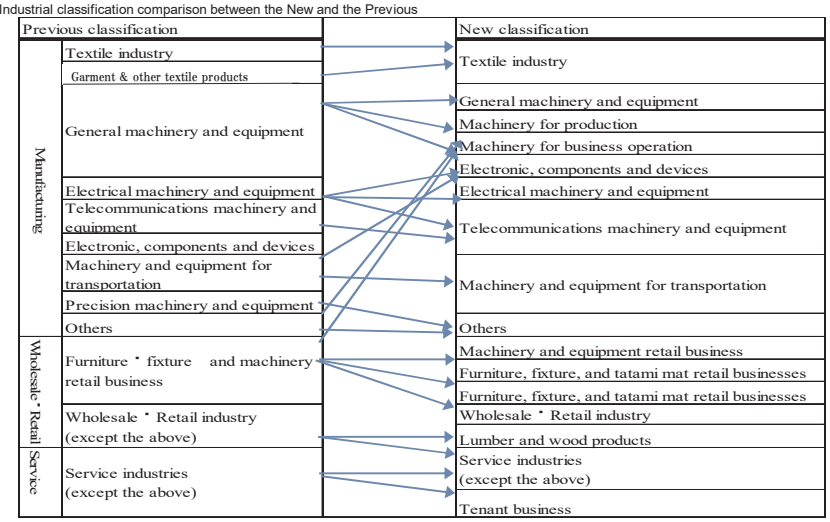

Source: Compiled from "An field survey of the industrial waste disposals & Research of recycling processes"（for 2014） by Ministry of the Environment

4.19 Generation of Industrial Waste by Type (1)

Type	FY1975		1980		1985		1990		1995	
	Volume (1,000 t)	Percentage (%)	Volume (1,000 t)	Percentage (%)	Volume (1,000 t)	Percentage (%)	Volume (1,000 t)	Percentage (%)	Volume (1,000 t)	Percentage (%)
Cinder	1,203	0.5	1,797	0.6	2,409	0.8	2,678	0.7	3,258	0.8
Sludge	37,660	15.9	88,190	30.2	112,821	36.1	171,450	43.4	185,508	47.1
Waste oil	2,289	1.0	2,419	0.8	3,672	1.2	3,471	0.9	3,173	0.8
Waste acid	9,872	4.2	10,219	3.5	4,320	1.4	2,674	0.7	4,441	1.1
Waste alkali	14,435	6.1	6,090	2.1	923	0.3	1,547	0.4	2,020	0.5
Waste plastics	1,480	0.6	2,232	0.8	2,816	0.9	4,334	1.1	6,253	1.6
Waste paper	991	0.4	1,624	0.6	1,472	0.5	1,193	0.3	1,897	0.5
Wood waste	7,890	3.3	6,628	2.3	8,058	2.6	6,573	1.7	7,161	1.8
Waste fiber	204	0.1	101	0.0	98	0.0	99	0.0	84	0.0
Animal and plant residue	2,596	1.1	4,323	1.5	2,207	0.7	3,543	0.9	3,961	1.0
Waste rubber	597	0.3	92	0.0	78	0.0	94	0.0	87	0.0
Scrap metal	9,985	4.2	13,111	4.5	8,877	2.8	8,533	2.2	6,482	1.6
Waste glass and ceramics	2,870	1.2	2,297	0.8	3,910	1.3	5,295	1.3	6,067	1.5
Slag	60,950	25.8	60,561	20.7	41,649	13.3	42,507	10.8	24,242	6.2
Debris	34,144	14.4	30,007	10.3	48,948	15.7	54,798	13.9	58,460	14.8
Animal excreta	41,184	17.4	49,629	17.0	62,462	20.0	77,208	19.5	72,996	18.5
Animal corpse	38	0.0	62	0.0	96	0.0	28	0.0	145	0.0
Soot and dust	8,101	3.4	11,731	4.0	6,224	2.0	7,491	1.9	7,578	1.9
Others	0	0.0	1,199	0.4	1,230	0.4	1,228	0.3		
Total	236,489	100.0	292,312	100.0	312,271	100.0	394,736	100.0	393,812	100.0

Type	FY2000		2001		2002		2003		2004		2005	
	Volume (1,000 t)	Percentage (%)	Volume (1,000 t)	Percentage (%)	Volume (1,000 t)	Percentage (%)	Volume (1,000 t)	Percentage (%)	Volume (1,000 t)	Percentage (%)	Volume (1,000 t)	Percentage (%)
Cinder	1,892	0.5	1,941	0.5	1,782	0.5	1,949	0.5	1,935	0.5	1,857	0.4
Sludge	189,181	46.6	186,895	46.7	182,438	46.4	190,379	46.3	188,306	45.1	187,688	44.5
Waste oil	3,248	0.8	3,089	0.8	3,185	0.8	3,817	0.9	3,310	0.8	3,471	0.8
Waste acid	2,938	0.7	2,822	0.7	2,681	0.7	2,662	0.6	2,738	0.7	2,477	0.6
Waste alkali	1,563	0.4	1,528	0.4	1,492	0.4	1,942	0.5	2,039	0.5	2,079	0.5
Waste plastics	5,790	1.4	5,473	1.4	5,552	1.4	5,462	1.3	5,939	1.4	6,052	1.4
Waste paper	2,156	0.5	2,159	0.5	2,096	0.5	1,923	0.5	1,756	0.4	1,748	0.4
Wood waste	5,511	1.4	5,357	1.3	4,963	1.3	5,915	1.4	5,959	1.4	5,951	1.4
Waste fiber	76	0.0	78	0.0	70	0.0	72	0.0	75	0.0	93	0.0
Animal and plant residue	4,052	1.0	4,110	1.0	4,477	1.1	3,393	0.8	3,393	0.8	3,117	0.7
Animal offal					203	0.1	99	0.0	119	0.0	97	0.0
Waste rubber	44	0.0	38	0.0	37	0.0	43	0.0	47	0.0	55	0.0
Scrap metal	8,096	2.0	8,233	2.1	7,684	2.0	9,044	2.2	10,039	2.4	10,947	2.6
Waste glass and ceramics	4,797	1.2	4,605	1.2	4,545	1.2	4,273	1.0	5,473	1.3	4,555	1.1
Slag	16,448	4.1	16,350	4.1	16,249	4.1	17,037	4.1	21,192	5.1	26,186	6.2
Debris	58,829	14.5	57,096	14.3	55,365	14.1	59,246	14.4	62,497	15.0	60,562	14.4
Animal excreta	90,489	22.3	90,094	22.5	89,799	22.8	88,977	21.6	87,686	21.0	87,204	20.7
Animal corpse	163	0.0	191	0.0	211	0.1	200	0.0	186	0.0	196	0.0
Soot and dust	10,765	2,7	10,183	2.5	10,406	2.6	15,190	3.7	14,466	3.5	17,342	4.1
Total	406,037	100.0	400,243	100.0	393,234	100.0	411,623	100.0	417,156	100.0	421,677	100.0

4.19 Generation of Industrial Waste by Type (2)

Type	FY2006		2007		2008		2009		2010		2011	
	Volume (1,000 t)	Percentage (%)	Volume (1,000 t)	Percentage (%)	Volume (1,000 t)	Percentage (%)	Volume (1,000 t)	Percentage (%)	Volume (1,000 t)	Percentage (%)	Volume (1,000 t)	Percentage (%)
Cinder	1,969	0.5	2,028	0.5	2,053	0.5	1,821	0.5	1,835	0.5	1,869	0.5
Sludge	185,327	44.2	185,305	44.2	176,114	43.6	173,629	44.5	169,885	44.0	164,638	43.4
Waste oil	3,406	0.8	3,610	0.9	3,617	0.9	3,048	0.8	3,251	0.8	3,212	0.8
Waste acid	5,405	1.3	5,662	1.3	2,721	0.7	2,542	0.7	2,483	0.6	2,595	0.7
Waste alkali	2,561	0.6	2,777	0.7	2,648	0.7	1,867	0.5	2,563	0.7	1,778	0.5
Waste plastics	6,094	1.5	6,428	1.5	6,445	1.6	5,665	1.5	6,185	1.6	5,691	1.5
Waste paper	1,664	0.4	1,466	0.3	1,383	0.3	1,265	0.3	1,153	0.3	1,020	0.3
Wood waste	5,852	1.4	5,971	1.4	6,262	1.6	6,294	1.6	6,121	1.6	6,229	1.6
Waste fiber	80	0.0	75	0.0	74	0.0	69	0.0	79	0.0	68	0.0
Animal and plant residue	3,008	0.7	3,066	0.7	3,194	0.8	2,888	0.7	2,902	0.8	2,572	0.7
Animal Offal	104	0.0	78	0.0	124	0.0	113	0.0	126	0.0	70	0.0
Scrap rubber	48	0.0	62	0.0	41	0.0	27	0.0	32	0.0	34	0.0
Scrap metal	11,461	2.7	8,766	2.2	7,830	2.0	7,246	1.9	7,242	1.9	7,267	1.9
Waste glass and ceramics	5,183	1.2	6,174	1.5	5,411	1.4	6,031	1.6	6,361	1.7	6,083	1.6
Slag	20,715	4.9	18,440	4.6	14,109	3.6	16,006	4.1	15,493	4.1	16,398	4.3
Debris	60,900	14.5	61,189	15.2	58,921	15.1	58,264	15.1	59,839	15.7	58,887	15.5
Animal excreta	87,476	20.9	87,698	21.7	88,162	22.6	84,847	22.0	84,459	22.2	85,434	22.5
Animal corpse	197	0.0	168	0.0	161	0.0	156	0.0	172	0.0	153	0.0
Soot and dust	16,964	4.0	16,550	4.1	15,923	4.1	16,823	4.4	15,903	4.2	15,138	4.0
Total	419,425	100.0	403,661	100.0	389,746	100.0	385,988	100.0	381,206	100.0	379,137	100.0

Type	FY2012		FY2013		FY2014	
	Volume (1,000 t)	Percentage (%)	Volume (1,000 t)	Percentage (%)	Volume (1,000 t)	Percentage (%)
Cinder	1,869	0.5	1,833	0.5	2,046	0.5
Sludge	164,638	43.4	164,115	42.7	168,821	43.0
Waste oil	3,212	0.8	2,912	0.8	3,044	0.8
Waste acid	2,595	0.7	2,778	0.7	3,191	0.8
Waste alkali	1,778	0.5	2,243	0.6	2,306	0.6
Waste plastics	5,691	1.5	6,120	1.6	6,509	1.7
Waste paper	1,020	0.3	896	0.2	985	0.3
Wood waste	6,229	1.6	6,991	1.8	7,487	1.9
Waste fiber	68	0.0	89	0.0	103	0.0
Animal and plant residue	2,572	0.7	2,603	0.7	2,706	0.7
Animal offal	70	0.0	97	0.0	83	0.0
Waste rubber	34	0.0	26	0.0	28	0.0
Scrap metal	7,267	1.9	7,815	2.0	9,284	2.4
Waste glass and ceramics	6,083	1.6	6,468	1.7	8,267	2.1
Slag	16,398	4.3	16,761	4.4	14,563	3.7
Debris	58,887	15.5	63,233	16.4	64,394	16.4
Animal excreta	85,434	22.5	82,626	21.5	81,416	20.7
Animal corpse	153	0.0	125	0.0	126	0.0
Soot and dust	15,138	4.0	16,911	4.4	17,479	4.4
Total	379,137	100.0	384,642	100.0	392,840	100.0

Note: The sum of each type of industrial waste may be deffernt from the total value because of rounding.

Source: "Survey of the industrial waste disposals & of recycling processes (for 2014)," Ministry of the Environment

4.20 Changes in Disposal/Treatment of Industrial Waste

(Unit : 100 million t)

	Recycling	Reduction	Final disposal
FY1980	1.24	1.00	0.68
1985	1.29	0.92	0.91
1990	1.51	1.55	0.89
1991	1.58	1.49	0.91
1992	1.61	1.53	0.89
1993	1.56	1.57	0.84
1994	1.56	1.70	0.80
1995	1.47	1.78	0.69
1996	1.50	1.87	0.68
1997	1.69	1.79	0.67
1998	1.72	1.79	0.58
1999	1.71	1.79	0.50
2000	1.84	1.77	0.45
2001	1.83	1.75	0.42
2002	1.82	1.72	0.40
2003	2.01	1.80	0.30
2004	2.14	1.77	0.26
2005	2.19	1.79	0.24
2006	2.15	1.82	0.22
2007	2.19	1.80	0.20
2008	2.17	1.70	0.17
2009	2.07	1.69	0.14
2010	2.05	1.67	0.14
2011	2.00	1.69	0.12
2012	2.08	1.58	0.13
2013	2.05	1.68	0.12
2014	2.10	1.72	0.10

Source: "Survey of industrial waste generation and treatment 2014," Ministry of the Environment

4.21 Changes in the Number of Permissions for the Industrial Waste and the Remaining Periods of the Capacity of Final Disposal Sites

	Number of Intermediate waste processing facilities	Landfill site (Isolated-Type)		Landfill site (Non-Leachate-Controlled Type)		Landfill site (Leachate-Controlled Type)		Total		Final disposal volume (10,000 t)	Remaining years
		Number of Facilities	Remaining capacity (10,000 ㎥)	Number of Facilities	Remaining capacity (10,000 ㎥)	Number of Facilities	Remaining capacity (10,000 ㎥)	Number of Facilities	Remaining capacity (10,000 ㎥)		
2014	18,680	24	0.99	1,073	6,014	730	10,589	1,827	16,604	1,040	16.0

Note:
The remaining years = the remaining capacity / the final disposal volume (conversion factor: 1m3/t)

Source: "Administrative organization of industrial waste," "Survey of industrial waste generation and treatment," Ministry of the Environment

4.22 Number of illegal-dumping cases of Industrial Waste and volume dumped by Prefecture (Newly-reported cases) (1)

	2001		2002		2003		2004		2005		2006		2007	
	Number of Cases	Volume dumped (t)	Number of Cases	Volume dumped (t)	Number of Cases	Volume dumped (t)	Number of Cases	Volume dumped (t)	Number of Cases	Volume dumped (t)	Number of Cases	Volume dumped (t)	Number of Cases	Volume dumped (t)
Hokkaido	31	3,345	25	28,961	19	2,363	17	1,341	23	14,344	25	10,590	20	7,739
Aomori	39	3,732	40	7,618	42	5,564	30	3,921	16	2,957	17	9,295	24	1,971
Iwate	7	36,481	5	1,724	10	11,701	27	4,837	17	8,155	13	3,479	11	2,116
Miyagi	16	2,892	9	11,316	16	58,134	9	3,002	5	1,358	2	181	2	58
Akita	5	494	4	323	3	388	2	45	0	0	0	0	0	0
Yamagata	7	826	4	261	5	320	1	150	2	134	0	0	2	27,706
Fukushima	14	7,178	17	3,612	33	2,441	25	1,390	15	796	24	3,796	3	123
Ibaraki	165	25,501	159	21,568	126	11,218	123	72,022	101	15,564	59	10,924	39	15,260
Tochigi	29	3,008	53	6,159	27	7,545	40	17,567	25	6,794	39	4,393	21	7,967
Gunma	51	8,499	40	4,277	45	6,850	26	13,766	37	1,108	20	491	4	201
Saitama	12	454	13	1,040	1	13	1	800	1	27	1	66	0	0
Chiba	270	47,731	150	36,007	191	11,712	92	9,725	73	26,294	79	23,861	40	13,853
Tokyo	0	0	2	30	0	0	0	0	0	0	0	0	0	0
Kanagawa	1	170	2	120	1	10	0	0	5	418	2	4,791	0	0
Niigata	28	2,429	26	1,434	26	3,613	17	3,526	5	1,341	18	4,191	8	825
Toyama	2	106	1	150	3	130	0	0	4	160	0	0	1	11
Ishikawa	14	4,878	6	644	6	7,187	3	1,090	10	1,924	11	2,152	2	64
Fukui	3	926	5	1,098	8	225	9	414	3	218	3	2,184	4	473
Yamanashi	8	398	2	192	6	3,098	4	778	2	20	2	140	0	0
Nagano	12	2,025	8	3,111	1	41	1	25	1	20	2	85	0	0
Gifu	3	75	2	752	10	567,272	2	70	3	33,500	1	238	1	40
Shizuoka	12	2,163	12	1,651	10	389	4	204,533	6	1,961	10	1,989	13	796
Aichi	8	2,585	7	20,201	11	687	4	10,613	1	60	4	7,770	5	476
Mie	15	977	24	6,124	27	6,766	20	2,608	11	808	6	130	14	507
Shiga	9	590	4	174	12	455	7	4,722	8	282	11	600	10	1,860
Kyoto	52	24,773	22	8,895	21	5,367	5	2,201	5	1,261	3	354	2	3,055
Osaka	8	8,257	7	3,169	0	0	3	45	1	700	1	1,000	0	0
Hyogo	17	19,759	14	9,953	11	3,677	7	443	12	14,607	18	5,073	11	5,995
Nara	5	515	3	40	9	1,183	24	10,333	10	1,160	14	5,845	7	1,270
Wakayama	11	4,360	14	7,202	2	36	8	853	10	418	5	846	1	88
Tottori	13	888	2	194	8	258	3	57	2	23	7	956	7	1,225
Shimane	11	953	11	4,236	5	647	1	0	2	87	4	100	2	122
Okayama	10	1,819	20	3,830	21	972	21	992	10	625	12	1,069	1	20
Hiroshima	7	625	5	584	8	1,839	1	12	8	1,598	5	959	6	506
Yamaguchi	3	838	4	21,641	6	309	1	13	1	2,140	0	0	1	18
Tokushima	3	1,458	6	1,123	3	43	2	147	5	580	2	200	4	80
Kagawa	8	679	4	123	10	886	8	505	6	207	1	211	0	0
Ehime	14	224	10	1,064	5	1,137	5	30,865	10	17,844	14	991	10	434
Kochi	11	1,771	17	507	19	1,102	13	252	5	167	5	513	0	0
Fukuoka	24	4,748	15	1,646	8	826	4	412	5	887	4	265	5	103
Saga	8	2,382	6	496	0	0	2	54	2	1,037	3	760	1	70
Nagasaki	56	3,465	37	2,358	30	2,931	29	1,713	22	1,244	16	634	43	1,731
Kumamoto	19	1,899	29	25,511	44	7,332	17	1,755	9	1,500	18	2,035	9	530
Oita	21	782	33	4,184	3	122	4	139	5	1,434	3	50	7	807
Miyazaki	27	1,583	11	446	7	117	28	1,886	38	2,652	43	16,616	27	3,072
Kagoshima	52	1,950	29	1,153	27	3,314	22	1,627	11	1,019	21	1,011	14	549
Okinawa	9	496	15	61,283	8	4,759	1	24	5	2,745	6	401	0	0
Total	1,150	241,676	934	318,181	894	744,978	673	410,824	558	172,179	554	131,233	382	101,718

Notes:
1) A figures is the number of illegal dumping cases that were identified and reported in an indicated year.
2) The aggregated amount of illegal dumping in each column does not match the total value because of rounding.
3) The number of cases in a government-decreed cities is included in the prefecture in which the city is situated.

4.22 Number of illegal-dumping cases of Industrial Waste and volume dumped by Prefecture (including Newly-reported cases) (2)

	2008		2009		2010		2011		2012		2013		2014		2015	
	Number of Cases	Volume dumped (t)	Number of Cases	Volume dumped (t)	Number of Cases	Volume dumped (t)	Number of Cases	Volume dumped (t)	Number of Cases	Volume dumped (t)	Number of Cases	Volume dumped (t)	Number of Cases	Volume dumped (t)	Number of Cases	Volume dumped (t)
Hokkaido	10	1,850	6	263	6	1,030	5	5,935	4	2,566	7	2,630	4	377	4	280
Aomori	7	829	5	2,521	3	102	1	86	13	1,383	10	540	8	2,283	8	1,395
Iwate	15	5,285	11	3,229	3	4,333	9	291	4	440	2	76	0	0	4	12,988
Miyagi	5	454	6	2,712	0	0	0	0	0	0	1	21	1	176	0	0
Akita	1	45	1	110	0	0	0	0	0	0	0	0	0	0	2	48
Yamagata	0	0	3	176	0	0	1	55	0	0	0	0	1	17	2	218
Fukushima	4	44,018	9	3,957	2	812	3	1,398	0	0	2	173	7	473	5	746
Ibaraki	59	35,873	36	5,848	28	3,486	34	8,310	41	3,713	28	4,684	34	2,932	8	509
Tochigi	13	4,678	7	653	12	5,289	4	8,098	7	3,926	12	610	5	2,458	7	2,440
Gunma	5	178	5	550	8	565	8	449	5	3,365	6	707	6	463	1	21
Saitama	0	0	0	0	1	20	0	0	0	0	0	0	0	0	1	200
Chiba	16	2,287	39	3,220	35	5,830	34	8,380	16	4,502	13	2,281	7	385	19	1,149
Tokyo	0	0	0	0	0	0	0	0	0	0	0	0	1	30	0	0
Kanagawa	0	0	0	0	0	0	0	0	1	22	0	0	0	0	0	0
Niigata	7	854	14	726	4	676	3	665	5	229	2	192	7	751	3	83
Toyama	2	40	0	0	0	0	0	0	0	0	0	0	0	0	0	0
Ishikawa	5	773	4	88	3	89	5	113	2	230	0	0	6	160	1	11
Fukui	7	361	8	357	3	126	2	917	2	531	2	73	1	200	2	92
Yamanashi	2	315	5	234	5	163	2	44	2	834	2	160	3	1,816	2	521
Nagano	0	0	1	9,220	0	0	1	119	0	0	0	0	0	0	0	0
Gifu	0	0	0	0	0	0	0	0	0	0	0	0	0	0	2	629
Shizuoka	18	5,649	8	540	5	399	4	84	2	4,058	0	0	5	135	3	246
Aichi	5	998	5	540	1	150	0	0	0	0	1	30	0	0	0	0
Mie	8	68,005	5	393	4	311	3	390	5	205	3	601	3	6,390	12	1,007
Shiga	4	250	2	125	2	26,000	2	4,300	2	24	7	2,633	2	10	4	112,602
Kyoto	5	2,495	7	2,248	2	827	0	0	1	60	4	1,209	4	299	0	0
Osaka	0	0	0	0	2	190	0	0	0	0	0	0	0	0	1	55
Hyogo	3	3,591	7	2,716	5	1,358	6	322	5	747	5	454	1	15	6	241
Nara	15	3,765	10	10,781	12	600	2	160	8	527	3	2,630	0	0	2	30
Wakayama	5	2,859	0	0	1	573	1	1,065	1	1,065	4	1,616	0	0	1	50
Tottori	0	0	10	355	0	0	1	182	3	1,241	1	15	0	0	0	0
Shimane	2	67	2	372	1	20	0	0	2	44	1	15	3	120	0	0
Okayama	2	55	3	60	3	103	0	0	3	1,142	1	61	2	693	5	342
Hiroshima	5	725	8	1,350	8	233	9	1,957	4	440	2	36	2	55	2	46
Yamaguchi	2	161	0	0	1	1,000	0	0	0	0	1	82	0	0	1	26,134
Tokushima	2	20	0	0	1	59	0	0	1	13	0	0	4	129	0	0
Kagawa	4	5,241	2	602	1	47	0	0	0	0	1	60	1	29	1	740
Ehime	7	342	7	233	1	22	2	237	1	19	0	0	1	11	2	220
Kochi	1	2,500	0	0	2	150	2	325	3	438	1	108	1	63	1	438
Fukuoka	3	2,182	1	62	1	18	0	0	0	0	3	3,848	3	1,309	0	0
Saga	2	704	4	235	9	3,903	5	1,228	5	563	4	227	1	23	0	0
Nagasaki	14	515	4	279	10	376	11	409	9	257	7	1,443	8	597	6	414
Kumamoto	0	0	0	0	1	30	2	108	0	0	3	61	8	550	5	320
Oita	0	0	0	0	1	30	1	15	0	0	1	34	0	0	4	340
Miyazaki	23	2,329	10	1,226	8	135	14	969	16	10,463	11	1,099	11	2,197	8	779
Kagoshima	17	2,078	15	551	15	1,438	12	1,565	10	754	7	406	12	3,585	6	159
Okinawa	3	358	9	743	6	1,451	3	5,136	4	75	1	27	2	43	2	58
Total	308	202,730	279	57,274	216	61,944	192	53,311	187	43,875	159	28,840	165	28,773	143	165,550

Source: "Status of Illegal Dumping of Industrial Waste (2015)," Ministry of the Environment

4.22 Number of illegal-dumping cases of Industrial Waste and volume dumped by Prefecture (Newly-reported cases) (3)

	Illegal dumping (case)	Amount (10,000 t)
FY1993	274	34.2
1994	353	38.2
1995	679	44.4
1996	719	21.9
1997	855	40.8
1998	1,197	42.4
1999	1,049	43.3
2000	1,027	40.3
2001	1,150	24.2
2002	934	31.8
2003	894	74.5
2004	673	41.1
2005	558	17.2
2006	554	13.1
2007	382	10.2
2008	308	20.3
2009	279	5.7
2010	216	6.2
2011	192	5.3
2012	187	4.4
2013	159	2.9
2014	165	2.9
2015	143	16.6

Note:

Figures show the cases in which a dumped volume per case is 10t or more among those cases grasped by prefectures and government-creed cities,

Source: "Status of Illegal Dumping of Industrial Waste (2015)," Ministry of the Environment

4.23 Survey on Environmental impacts by Illegal dumping and measures by prefectures (the unsolved cases)

(As of the end of FY2015)

			Number of unsolved cases	Percentage (%)	Remaining volume (t)	Percentage (%)
Have already been detrimental to environment			12	0.5%	1,977,142	12.3%
	Measure/order - issued		6	0.2%	1,970,025	12.2%
		Administrative subrogation - Already taken	3	0.1%	1,903,738	11.8%
		Not yet	3	0.1%	66,287	0.4%
	Measure/order - Not issued yet		6	0.2%	7,117	0.0%
		Administrative advice etc.	5	0.2%	7,097	0.0%
		Offender not identified yet	1	0.0%	20	0.0%
More likely to be detrimental to environment			88	3.3%	5,492,411	34.1%
	Measure/order - issued		42	1.6%	4,655,426	28.9%
		Administrative subrogation - Already taken	13	0.5%	3,901,765	24.2%
		Not yet	29	1.1%	753,661	4.7%
	Measure/order - Not issued yet		46	1.7%	836,986	5.2%
		Administrative advice etc.	45	1.7%	836,964	5.2%
		Offender not identified yet	1	0.0%	22	0.0%
Not detrimental currently			2,527	95.5%	7,961,700	49.5%
	Measure/order - issued		71	2.7%	1,161,745	7.2%
		Administrative subrogation - Already taken	4	0.2%	64,273	0.4%
		Not yet	67	2.5%	1,097,472	6.8%
	Measure/order - Not issued yet		2,456	92.8%	6,799,955	42.2%
		Administrative advice etc.	1,953	73.8%	5,152,161	32.0%
		Offender not identified yet	326	12.3%	500,572	3.1%
		No response	177	6.7%	1,147,222	7.1%
Under investigatio			19	0.7%	665,435	4.1%
	Measure/order - issued		0	0.0%	0	0.0%
		Administrative subrogation - Already taken	0	0.0%	0	0.0%
		Not yet	0	0.0%	0	0.0%
	Measure/order - Not issued yet		19	0.7%	665,435	4.1%
		Administrative advice etc.	19	0.7%	665,435	4.1%
		Offender not identified yet	0	0.0%	0	0.0%
Total			2,646	100.0%	16,096,690	100.0%

Notes:

・"Administrative advice, etc." means such governmental action as an administrative advice, collection of reports, a site inspection, an order for improvement, accusation, order of business suspension, nullification of business licenses, nullification of facility construction permits, etc.

・The aggregated amount of the remaining volume and the rates in each column doesn't match the total value because of rounding.

Source: "Status of Illegal Dumping of Industrial Waste in FY 2015," Ministry of the Environment

4.24 Offenders of illegal dumping

	Waste-discharging business		Non-licensed business		Licensed business		Other		Multiple businesses		Unknown		Total	
	Number (case)	Weight (t)	Number (case)	Weight (t)	Number (case)	Weight (t)	Number (case)	Weight (t)	Number (case)	Weight (t)	Number (case)	Weight (t)	Number (case)	Weight (t)
FY1998	694	141,548	77	148,418	74	46,218			19	7,708	333	80,408	1,197	424,300
1999	619	96,509	108	105,894	87	53,725			14	17,700	221	159,465	1,049	433,293
2000	571	119,982	95	76,299	75	53,760			15	55,534	271	97,700	1,027	403,274
2001	498	122,789	174	46,448	67	18,148			17	7,290	394	47,001	1,150	241,676
2002	444	48,471	137	83,455	64	143,395			18	23,247	271	19,613	934	318,181
2003	368	73,796	93	49,089	55	592,467			28	5,004	350	24,623	894	744,978
2004	290	32,289	65	86,727	43	244,887			13	5,620	262	41,302	673	410,824
2005	228	26,635	85	82,833	52	29,017			7	9,180	186	24,514	558	172,179
2006	271	47,810	63	10,499	58	34,869			14	26,109	148	11,947	554	131,233
2007	193	24,113	57	22,804	21	31,114			11	3,502	100	20,186	382	101,718
2008	149	97,894	30	19,859	23	5,709	7	6,419	28	54,945	71	17,905	308	202,730
2009	150	24,780	18	3,301	12	2,523	6	300	22	12,658	71	13,711	279	57,274
2010	122	22,585	8	14,361	6	12,740	14	5,707	21	2,545	45	4,006	216	61,944
2011	119	19,487	8	4,238	9	18,912	2	179	10	5,849	44	4,646	192	53,311
2012	105	22,489	5	5,438	11	10,229	13	836	10	2,427	43	2,457	187	43,875
2013	90	13,313	2	76	6	1,615	6	549	15	9,256	40	4,031	159	28,840
2014	71	11,895	9	4,740	8	1,283	15	1,089	17	8,005	45	1,761	165	28,773
2015	81	13,607	3	162	7	139,145	4	283	12	10,243	36	2,110	143	165,500

Notes:

・"Other" has been added in the survey since FY 2009. It includes waste-discharging businesses such as secondhand-goods dealers, landowners, and also non-licensed businesses or other than licensed businesses.

・The aggregated amount in the column of "Weight" may not match the total value because of rounding.

Source: "Status of Illegal Dumping of Industrial Waste in FY 2015," Ministry of the Environment

4.25 Number of Unsolved Cases of Illegal Dumping and Remaining Amount

(As of the end of FY2015)

		Less than 500 t	500 t ～ 1,000 t	1,000 t ～ 5,000 t	5,000 t ~	5,000 t ～ 10,000 t	10,000 t ～ 50,000 t	50,000 t ～ 100,000 t	100,000 t ~	Total
Number of cases		1,622	228	465	331	120	149	36	26	2,646
	%	61.3%	8.6%	17.6%	12.5%	4.5%	5.6%	1.4%	1.0%	100.0%
Amount (t)		166,558	151,872	1,061,176	14,717,084	835,832	2,930,155	2,245,024	8,706,702	16,096,690
	&	1.0%	0.9%	6.6%	91.4%	5.2%	18.2%	13.9%	54.1%	100.0%

Source: "Illegal Dumping of Industrial Waste in FY 2015," Ministry of the Environment

4.26 Number of the Unsolved Cases of Illegal Dumping and Remaining Amount by Prefecture

(As of the end of FY2015)

Prefecture	Number of cases	Amount (t)
Hokkaido	52	179,700
Aomori	103	166,291
Iwate	35	58,135
Miyagi	20	1,112,792
Akita	7	1,017,370
Yamagata	6	59,766
Fukushima	63	76,146
Ibaraki	373	514,383
Tochigi	96	296,645
Gunma	133	396,030
Saitama	96	923,559
Chiba	830	3,955,570
Tokyo	26	81,436
Kanagawa	37	127,373
Niigata	46	70,961
Toyama	1	205
Ishikawa	46	97,879
Fukui	8	897,255
Yamanashi	33	33,197
Nagano	20	52,753
Gifu	36	90,396
Shizuoka	23	42,274
Aichi	40	672,346
Mie	46	1,924,140
Shiga	36	837,258
Kyoto	43	123,540
Osaka	38	127,024
Hyogo	53	99,251
Nara	29	250,364
Wakayama	11	31,040
Tottori	12	1,325
Shimane	8	178
Okayama	17	6,581
Hiroshima	23	12,632
Yamaguchi	3	28,957
Tokushima	3	76,499
Kagawa	12	78,181
Ehime	19	453,172
Kochi	2	715
Fukuoka	23	527,419
Saga	19	13,136
Nagasaki	18	91,898
Kumamoto	12	6,940
Oita	4	838
Miyazaki	18	9,273
Kagoshima	43	34,097
Okinawa	24	439,771
Total	2,646	16,096,690

Source: "Illegal Dumping of Industrial Waste in FY 2015," Ministry of the Environment

4.27 Improper Disposal of Sulfate Pitch

(As of the end of FY2015)

FY		Improper disposal case		Treated		Not-treated		
		Number of cases	Volume of Improper disposal (drums)	Number of cases	Treated (drums)	Number of cases	Not-treated (drums)	Partially-treated (drums)
1999		8	1,639	8	1,639	0	0	0
2000		5	822	5	822	0	0	0
2001		34	5,626	33	5,577	1	49	0
	1st half	11	1,644	11	1,644	0	0	0
	2nd half	23	3,982	22	3,933	1	49	0
2002		38	17,639	35	17,151	3	351	137
	1st half	17	7,616	17	7,616	0	0	0
	2nd half	21	10,023	18	9,535	3	351	137
2003		81	28,462	78	28,067	3	260	135
	1st half	39	21,371	37	21,036	2	200	135
	2nd half	42	7,091	41	7,031	1	60	0
2004		62	9,860	60	8,954	2	256	650
	1st half	42	8,283	40	7,377	2	256	650
	2nd half	20	1,577	20	1,577	0	0	0
2005		31	4,322	31	4,322	0	0	0
	1st half	15	1,522	15	1,522	0	0	0
	2nd half	16	2,800	16	2,800	0	0	0
2006		14	2,170	14	2,170	0	0	0
	1st half	13	1,375	13	1,375	0	0	0
	2nd half	1	795	1	795	0	0	0
2007		4	277	4	277	0	0	0
2008		0	0	0	0	0	0	0
2009		1	7	1	7	0	0	0
2010		0	0	0	0	0	0	0
2011		0	0	0	0	0	0	0
2012		0	0	0	0	0	0	0
2013		0	0	0	0	0	0	0
2014		0	0	0	0	0	0	0
2015		0	0	0	0	0	0	0
Total		278	70,824	269	68,986	9	916	922

Note:
Volume was converted in terms of the number of drums.

Source: "Status of Improper Disposal of Sulfate Pitch (2015)," Ministry of the Environment

4.28 Wide-area movement of municipal waste

(Unit : 10 thousand t / yr.) (FY2014)

Region	Final disposal amount	Transported out of Prefectures [1]		Transported out of the Region [2]	
Hokkaido / Tohoku	91.0	1.7	(1.9%)	0.3	(0.4%)
		6.7%		2.1%	
Tokyo Metropolitan area	121.5	15.1	(12.4%)	8.0	(6.6%)
		58.0%		51.8%	
Hokuriku / Chubu	60.5	7.7	(12.8%)	6.2	(10.3%)
		29.7%		40.2%	
Kinki	91.9	0.7	(0.7%)	0.4	(0.5%)
		2.5%		2.9%	
Chugoku / Shikoku	34.3	0.7	(2.0%)	0.4	(1.2%)
		2.7%		2.7%	
Kyushu / Okinawa	49.8	0.1	(0.2%)	0.1	(0.1%)
		0.4%		0.5%	
Total	449.0	26.0	(5.8%)	15.5	(3.5%)
		100.0%		100.0%	

Notes:

1: A simple regional aggregation of the municipal wastes of which final disposal was outsourced to public corporations/businesses outside the prefecture by a municipality. However, the amount outsourced to Osaka Bay Regional Offshore Environmental Improvement Center is not included.

2: The amount of municipal wastes of which final disposal was outsourced to public corporations/businesses outside the region by municipalities.

・The sum may not exactly match the total value because the unit is rounded off.

・The percentage in the parentheses (%) shows that of the final disposal amount.

・The figures in the lower row for each region show the regional rate of the final disposal amount transported out of the prefecture and the region respectively.

Source: "Report of further study on regional waste management (cf. "Current status of Regional waste disposal") and the amount of waste recycling," Ministry of the Environment

4.29 Wide-area movement of industrial waste

(Unit : 10 thousand t / yr.) (FY2014)

	Amount transported out of prefectures where waste was discharged			
			Inside the region	Outside the region
Hokkaido / Tohoku	289.7	(7.3%)	178.7	111.0
Tokyo Metropolitan area	1,854.4	(46.4%)	1,551.3	303.1
Chubu	689.0	(17.3%)	362.4	326.6
Kinki	614.1	(15.4%)	376.3	237.7
Chugoku	231.3	(5.8%)	117.1	114.2
Shikoku	92.9	(2.3%)	31.2	61.7
Kyushu / Okinawa	221.0	(5.5%)	170.5	50.5
Total	3,992.4	(100.0%)	2,787.6	1,204.9

Note:

The sum value may not exactly match the total because the unit less than 1,000 tons are rounded.

Source: "Report of further study on regional waste management (cf. "Current status of Regional waste disposal") and the amount of waste recycling," Ministry of the Environment

4.30 Percentage of Containers and Packaging in Household Waste

(Ratio by volume) (Unit : %)

		2009	2010	2011	2012	2013	2014	2015	2016
Packaging	Papers	11.8	9.6	14.5	13.1	13.1	13.9	10.3	10.7
	Plastic	36.6	34.8	33.9	36.5	35.9	43.2	39.8	38.1
	Glass	1.6	1.4	1.2	1.3	1.0	1.0	1.4	2.1
	Metal	3.5	4.1	2.5	2.9	3.0	2.9	3.5	3.8
	Other	0.2	0.1	0.4	0.1	0.2	0.1	0.0	0.0
	Subtotal	53.7	50.0	52.5	53.8	53.0	61.0	55.1	54.7
Non-packaging	Papers	16.8	16.1	20.3	17.8	18.1	17.5	19.4	18.4
	Plastic	4.2	5.6	7.1	5.0	4.9	5.9	5.4	6.0
	Glass	0.1	0.1	0.1	0.2	0.1	0.0	0.1	0.1
	Metal	0.6	0.5	0.4	0.9	0.8	0.6	0.9	0.9
	Other	24.6	27.6	19.7	22.4	23.1	14.9	19.0	19.9
	Subtotal	46.3	49.9	47.5	46.2	47.0	39.0	44.9	45.3
Total		100.0	99.9	100.0	100.0	100.0	100.0	100.0	100.0

(Ratio by wet weight) (Unit : %)

		2009	2010	2011	2012	2013	2014	2015	2016
Packaging	Papers	7.8	6.0	10.3	9.1	7.4	8.2	6.6	6.7
	Plastic	8.4	6.7	8.8	8.9	8.6	9.9	8.7	8.7
	Glass	4.9	3.5	3.7	4.0	3.6	3.9	4.6	6.0
	Metal	1.9	1.5	1.3	2.1	1.5	1.7	2.0	1.8
	Other	0.3	0.1	0.1	0.2	0.2	0.1	0.0	0.1
	Subtotal	23.3	17.8	24.1	24.1	21.3	23.8	22.0	23.3
Non-packaging	Papers	24.8	24.2	27.6	26.7	25.3	26.4	26.3	25.3
	Plastic	2.8	2.0	1.9	2.4	1.6	1.7	2.0	1.9
	Glass	0.3	0.2	0.2	0.3	0.2	0.3	0.2	0.3
	Metal	1.2	0.6	0.7	1.5	1.3	1.5	1.7	1.5
	Other	47.6	55.2	45.5	45.0	50.3	46.5	47.8	47.8
	Subtotal	76.7	82.2	75.9	75.9	78.7	76.4	78.0	76.8
Total		100.0	100.0	100.0	100.0	100.0	100.0	100.0	100.0

Source: "Report on Using and Discarding Containers and Packaging," Ministry of the Environment

4.31 Production and disposal of plastics

(Unit：1,000 t / year)

	Production of resin	Domestic consumption of resin products [1)]	Total disposal of plastic waste	General Waste	Industrial waste
1975	5,170	3,150	2,610	1,470	1,140
1980	7,520	5,520	3,250	1,780	1,470
1985	9,230	6,990	4,190	2,320	1,870
1986	9,370	7,300	4,530	2,500	2,030
1987	10,030	7,920	4,650	2,600	2,050
1988	11,020	8,610	4,880	2,760	2,120
1989	11,910	9,570	5,060	2,910	2,150
1990	12,630	9,990	5,570	3,130	2,440
1991	12,800	10,070	6,220	3,450	2,770
1992	12,580	9,280	6,920	3,910	3,010
1993	12,250	9,020	7,560	4,190	3,370
1994	13,040	9,660	8,460	4,230	* 4,230
1995	14,030	9,790	8,840	4,430	* 4,410
1996	14,660	10,810	9,090	4,550	* 4,540
1997	15,210	11,360	9,490	4,780	* 4,710
1998	13,910	10,200	9,840	4,990	* 4,850
1999	14,570	10,810	9,760	4,860	* 4,900
2000	14,740	10,980	9,970	5,080	* 4,890
2001	13,880	10,960	10,160	5,280	* 4,890
2002	13,850	10,570	9,900	5,080	* 4,820
2003	13,979	11,005	10,010	5,131	* 4,879
2004	14,460	11,360	10,130	5,190	* 4,940
2005	14,510	11,590	10,060	5,200	* 4,860
2006	14,450	11,200	10,050	5,080	* 4,980
2007	14,650	11,030	9,940	5,020	* 4,920
2008	13,450	10,890	9,980	5,020	* 4,960
2009	11,210	8,430	9,120	4,440	* 4,680
2010	12,700	9,700	9,450	4,590	* 4,860
2011	11,590	9,870	9,520	4,650	* 4,860
2012	10,540	9,600	9,290	4,460	* 4,820
2013	10,600	9,660	9,400	4,540	* 4,860
2014	10,610	9,700	9,260	4,420	* 4,830
2015	10,860	9,640	9,150	4,350	* 4,800

Note:

・Domestic consumption of resin products = (Production of resin) - (export volume of resin) + (import volume of resin) – (amount of liquid resin) - (amount of processing losses) + (recycled resin input) - (export volume of product) + (import amount of product)

・* Since 1994, the unused volume of production/process and loss volume during processing have been added to the volume of industrial waste.

Source: Compiled from information of Plastic Waste Management Institute web page (https://pwmi.or.jp/)

4.32 Changes in sales amounts of aluminum cans and recycling ratio

	Total weight sold (1,000 t / year)	Weight recycled (1,000 t / year)	Recycling rate (%)
1984	54	22	40.6
1994	248	151	61.1
2001	283	235	82.8
2002	292	243	83.1
2003	297	243	81.8
2004	303	261	86.1
2005	302	276	91.7
2006	299	271	90.9
2007	301	279	92.7
2008	299	261	87.3
2009	293	274	93.4
2010	296	274	92.6
2011	298	276	92.5
2012	301	285	94.7
2013	304	255	83.8
2014	313	273	87.4
2015	332	256	77.1

Note:
Recycling rate refers to percentage of aluminum can scrap that was recycled to aluminum can materials, car parts, a deoxidizing agent and the like for steel-making, among the consumed aluminum cans.

Source: Compiled from materials by Japan Aluminum Can Recycling Association

4.33 Changes in consumption and recycling rate of steel cans

	Total weight sold (1,000 t/year)	Weight recycled (1,000 t/year)	Recycling rate (%)
1984	1,027	341	33.2
1994	1,475	1,030	69.8
2001	1,055	899	85.2
2002	949	817	86.1
2003	911	797	87.5
2004	908	791	87.1
2005	770	868	88.7
2006	832	732	88.1
2007	834	710	85.1
2008	772	683	88.5
2009	699	623	89.1
2010	684	612	89.4
2011	682	616	90.4
2012	664	603	90.8
2013	611	567	92.9
2014	571	525	92.0
2015	486	451	92.9

Notes:

・Before 1998, production amounts are used for consumption weights and used amounts of steel can scrap are used for collected weights.

・Recycling rates = recycled weight / weight of consumption

Source: Compiled from materials by Japan Steel Can Recycling Association

4.34 Change in recovery rate of cardboard

	Recovery rate (%)
2004	84.0
2005	86.9
2006	88.4
2007	90.3
2008	92.1
2009	94.8
2010	95.0
2011	93.3
2012	94.1
2013	95.3
2014	96.7
2015	97.2

Notes:

・Recovery rate = [A] Real recovery amount of cardboard, waste paper, etc. / ([B] Consumption amount of base paper for cardboard + [C] Amount of products for import and export)

[A] is calculated by subtracting a weight of waste paper other than other than cardboard-origin and glue adhered on the cardboard from the collected weight of waste cardboard.

[B] refers to consumption amount of cardboard base-paper at cardboard factories.

[C] refers to an excess amount of exports (over imports) of cardboard used to pack import and export products.

※ Revised calculation method for recovery rate

According to the previous method, the weight of any brand products other than cardboard and foreign materials contained in collected waste was calculated on an assumption that they were contained with the same ratio as that in the domestic shipping amount of the base paper for cardboard and the consumption amount of it in the plants. This time, an inspection at factory sites by opening collected cardboard was conducted to find out that the ratio of weight of other brand products than cardboard and foreign materials was 8.4%. The new recovery rate is calculated by this ratio, that is lower than the previous ratio by 3 to 5 %.

Source: Compiled from materials by Cardboard Recycling Council

4.35 Changes in production volume and recovery ratio of PET bottles

（Unit：ton/year）

	Amount of sorted-collection by municipalities	Production of PET resin （actual demand）					Sales of designated PET bottles （1,000 ton）	Municipal recovery rate 2)	Recovery rate (including business-related waste)
		Soft drinks	Specified seasonings without oil	Sake, etc.	Other 1)	Total			
1995	2,594	118,831	13,491	9,788	30,720	172,830		1.8%	
1996	5,094	149,088	13,581	10,233	30,521	203,423		2.9%	
1997	21,361	194,748	13,222	10,836	32,923	251,729		9.8%	
1998	47,620	258,793	12,900	10,234	31,972	313,899		16.9%	
1999	75,811	308,222	12,501	11,479	38,284	370,486		22.8%	
2000	124,873	338,654	12,829	10,461	39,452	401,396		34.5%	
2001	161,651	380,372	11,265	11,090	40,053	442,780		40.1%	44.1%
2002	188,194	391,126	12,076	9,363	33,308	445,873		45.6%	53.4%
2003	211,753	412,970	12,606	10,980	34,175	470,731		48.5%	61.1%
2004	238,469	490,173	11,174	12,365	35,839	549,551		46.4%	62.3%
2005	251,962	509,684	10,995	11,904	38,027	570,610	530	47.5%	61.7%
2006	268,266	515,414	11,100	11,970	38,998	577,482	544	49.3%	66.3%
2007	283,441	533,091	13,175	11,583	41,363	599,212	572	49.6%	69.3%
2008	283,866	520,120	21,644	14,511	45,779	602,054	573	49.5%	77.7%
2009	287,340	511,080	21,121	14,500	46,545	593,246	565	50.9%	77.4%
2010	296,815	521,657	21,991	13,972	42,930	600,550	596	49.8%	72.2%
2011	297,839	511,412	20,339	13,363	37,893	583,007	604	49.3%	79.6%
2012	299,241	529,989	24,049	14,948	41,046	610,032	583	51.3%	90.4%
2013	301,787	568,340	25,553	15,291	44,620	653,804	579	52.1%	91.3%
2014	292,455	571,905	21,784	13,770	45,465	652,925	569	51.4%	93.5%
2015	292,881	587,322	27,191	9,293	53,584	677,390	563	52.0%	92.4%

Notes:

1. Except soft drinks, specified seasonings without oil, alcoholic beverages: namely, detergent, shampoo, cooking oil, other seasoning, cosmetics, pharmaceutical products, and the like.

2. Municipal recovery rate = Amount of municipal sorted collection ÷ Sales volume of PET bottles
(Until the end of fiscal year 2004, defined as Municipal recovery rate = Amount of municipal separate collection ÷ Production volume of resin)

Source: Compiled from materials of the Council for PET Bottles Recycling
and "The Performance of Sorted Collection and Recycling by Municipalities under the Containers and Packaging Recycling Act in FY 2015" by Ministry of the Environment

4.36 Utilization of products from recycled PET bottles

（Unit： ton / year）

	Fiber	Sheet	Bottle	Molding	Other	Total
2010	79,824	57,646	8,940	6,443	339	153,192
2011	79,074	59,563	7,534	7,815	370	154,357
2012	74,605	61,684	12,343	6,027	357	155,017
2013	73,635	69,108	19,581	6,081	400	168,805
2014	67,347	59,152	19,667	3,664	225	150,056
2015	66,946	73,038	17,190	3,554	299	161,026
2016	56,519	68,758	24,554	3,466	840	154,137
Ratio（FY 2016）	36.7%	44.6%	15.9%	2.2%	0.5%	100.0%

Source: Materials by the Japan Containers And Packaging Recycling Association

4.37 Changes in sales volume and collection rate of household cartons

（Unit: ton / year）

	Sales volume	Collection volume	Collection rate
FY2002	171,840	39,914	23.2%
2003	181,100	44,300	24.5%
2004	188,400	46,300	24.6%
2006	191,200	48,100	25.2%
2007	194,100	55,600	28.6%
2008	189,300	56,700	30.0%
2009	184,300	57,300	31.1%
2010	184,600	56,600	30.7%
2011	184,800	56,200	30.4%
2012	180,300	57,200	31.7%
2013	178,500	59,400	33.3%
2014	176,200	60,400	34.3%
2015	176,200	56,300	32.0%

Notes:

・Loss of paper from beverage makers, collected cartons from households, and milk cartons for school lunch , are not assumed to include aluminum-coated cartons.

・Collection rate of household paper cartons = volume collected from households /manufacturers' sales volume of paper cartons for home-use beverages

Source: Compiled from materials by Committee for Milk Container Environmental Issues

4.38 Achievement on Sorted Collection and Recycling based on the Containers and Packaging Recycling Act

		Estimate (t)	Actual (t)	Recycled (t)	Municipalities conducting sorted collection		
					# of municipalities conducting collection	Rate (%)	Population coverage rate (%)
Clear glass bottles	FY1997	406,133	292,775	275,119	1,610	49.5	76.8
	2010	358,442	326,614	310,356	1,660	94.9	98.9
	2011	324,023	322,655	308,851	1,639	94.1	98.5
	2012	340,563	315,630	302,432	1,635	93.9	98.4
	2013	339,032	325,149	301,619	1,634	93.8	98.5
	2014	323,210	319,018	296,590	1,640	94.2	98.5
	2015	322,380	321,138	294,821	1,653	94.9	98.7
Brown glass bottles	FY1997	299,536	243,916	228,170	1,610	49.5	77.0
	2010	307,399	282,663	268,540	1,662	95.0	98.9
	2011	293,965	278,409	264,833	1,643	94.3	98.5
	2012	292,687	274,022	260,553	1,636	93.9	98.3
	2013	291,567	271,797	258,447	1,635	93.9	98.4
	2014	274,004	260,111	249,682	1,640	94.2	98.4
	2015	272,962	256,458	243,578	1,652	94.9	98.7
Glass bottles of other colors	FY1997	118,536	107,533	95,190	1,535	47.2	74.1
	2010	183,967	188,117	175,345	1,657	94.7	98.3
	2011	179,736	189,780	177,615	1,646	94.5	98.0
	2012	179,717	196,237	183,701	1,644	94.4	97.9
	2013	179,402	200,578	188,356	1,655	95.0	98.0
	2014	185,679	202,745	191,573	1,663	95.5	98.0
	2015	186,252	210,614	197,748	1,672	96.0	98.2
Paper containers and packaging	FY2000	86,724	34,537	26,310	343	10.6	13.0
	2010	158,374	93,107	82,518	627	35.8	34.6
	2011	127,455	91,251	84,204	613	35.2	34.4
	2012	130,090	88,698	83,171	612	35.1	33.9
	2013	133,082	90,121	84,575	644	37.0	34.4
	2014	132,368	82,202	77,656	661	38.0	35.6
	2015	135,577	80,180	75,798	684	39.3	35.4
Pet bottles	FY1997	21,180	21,361	19,330	631	19.4	41.8
	2010	314,628	296,815	286,009	1,711	97.8	98.5
	2011	301,211	297,839	288,292	1,694	97.2	98.6
	2012	304,838	299,241	288,762	1,696	97.4	99.6
	2013	306,038	301,787	291,700	1,702	97.7	99.7
	2014	300,413	292,455	282,287	1,717	98.6	99.5
	2015	300,090	292,881	280,301	1,717	98.6	99.8
Plastic containers and packaging	FY2000	239,174	100,810	77,568	881	27.3	30.7
	2010	932,272	708,950	671,704	1,303	74.5	83.6
	2011	785,736	725,621	685,556	1,293	74.2	82.8
	2012	818,380	727,238	686,363	1,307	75.0	85.4
	2013	846,443	734,063	694,289	1,312	75.3	82.6
	2014	758,814	731,022	688,758	1,295	74.4	85.3
	2015	763,369	745,508	696,883	1,328	76.3	85.5
Steel cans	FY1997	526,701	464,662	443,506	2,411	74.1	86.4
	2010	310,523	226,038	224,329	1,722	98.4	98.1
	2011	250,251	218,637	215,719	1,698	97.5	97.6
	2012	248,461	207,845	203,446	1,692	97.1	97.5
	2013	246,687	193,804	189,527	1,689	97.0	96.7
	2014	213,227	179,068	174,722	1,692	97.2	97.5
	2015	211,210	164,153	160,390	1,704	97.9	97.2
Aluminum cans	FY1997	148,885	112,527	107,455	2,420	74.3	86.7
	2010	151,096	131,121	130,198	1,718	98.2	98.2
	2011	141,081	130,887	128,581	1,698	97.5	97.9
	2012	141,152	130,353	128,067	1,688	96.9	97.7
	2013	141,151	130,681	128,732	1,680	96.4	97.7
	2014	137,581	128,273	125,688	1,686	96.8	97.8
	2015	137,684	131,342	129,231	1,697	97.5	98.0
Cardboard	FY2000	434,888	380,290	372,576	1,728	53.5	61.0
	2010	769,679	603,244	601,753	1,583	90.5	91.8
	2011	697,549	615,841	614,937	1,561	89.6	91.3
	2012	697,363	604,528	599,496	1,558	89.4	93.2
	2013	697,643	610,129	598,892	1,556	89.3	93.5
	2014	698,150	586,654	581,809	1,563	89.8	93.4
	2015	700,294	591,863	586,969	1,580	90.8	94.4
Milk cartons and drink boxes	FY1997	23,028	6,644	6,419	993	30.5	43.4
	2010	27,334	15,612	15,542	1,357	77.5	87.9
	2011	22,696	14,447	14,413	1,314	75.4	87.8
	2012	22,904	15,079	14,426	1,308	75.1	88.0
	2013	23,321	13,933	13,183	1,304	74.9	86.5
	2014	22,919	13,231	12,476	1,301	74.7	85.6
	2015	23,319	12,579	12,325	1,344	77.2	87.3

Source: " Achievement on Sorted collection and Recycling based on the Containers and Packaging Recycling Act by municipalities in FY2015" by Ministry of the Environment

4.39 Changes in production volume and recycling rate of foamed polystyrene

（Unit：1,000 t / year）

	Production volume	Domestic circulation volume	Recycling volume	Recycling rate
1994	223	158	38	24.2%
1996	225	180	52	28.7%
1998	213	182	57	31.2%
2000	209	183	64	34.9%
2002	197	176	69	39.1%
2004	194	175	72	41.0%
2006	187	169	76	45.0%
2007	182	165	83	50.0%
2008	168	155	82	53.0%
2009	151	141	80	56.8%
2010	153	148	82	55.5%
2011	150	142	78	55.0%
2012	139	130	74	56.9%
2013	139	129	73	56.6%
2014	141	129	72	55.8%
2015	140	127	72	56.2%

Note:
Recycling rate= Recycling volume/Domestic distribution volume

Source: Compiled from materials by Japan Expanded Polystyrene Association

4.40 Implementation of Recycling of Specified Home Appliances (1)

Gross weight of parts and/or materials when they are processed into a shape that can be used as materials or parts of products and transacted at any cost or for free

		Number collected in designated collection locations (thousand)	Number processed for recycling (thousand)	Weight processed for recycling (t)(A)	Weight recycled (t)(B)	Resource regeneration rate[%] (B÷A×100)	Iron [t]	Copper [t]	Aluminum [t]	Mixer of non-iron materials and iron [t]	Cathode-ray tube (CRT) glass [t]	Others [t]	Total weight [t]
FY2003	Air conditioner	1,584	1,579	69,686	57,058	81%	23,219	3,432	1,136	26,831	—	2,439	57,058
	TV	3,550	3,549	96,435	76,025	78%	8,013	3,602	183	767	55,975	7,481	76,025
	Refrigerator	2,664	2,653	153,531	97,119	63%	68,417	1,113	293	18,179	—	9,115	97,119
	Washing machine	2,662	2,656	80,169	52,288	65%	35,120	644	263	9,894	—	6,365	52,288
2004	Air conditioner	1,814	1,809	79,044	64,939	82%	25,878	4,137	1,340	30,396	—	3,185	64,939
	TV	3,786	3,777	103,200	83,868	81%	8,167	3,825	123	1,100	60,818	9,823	83,868
	Refrigerator	2,801	2,807	161,131	103,546	64%	71,608	1,267	380	19,401	—	10,888	103,546
	Washing machine	2,813	2,791	85,764	58,710	68%	37,668	789	435	10,893	—	8,903	58,710
2005	Air conditioner	1,989	1,990	85,814	72,585	84%	26,200	5,490	2,228	33,925	—	4,742	72,585
	TV	3,857	3,852	107,993	83,530	77%	8,678	4,068	192	1,035	53,727	15,830	83,530
	Refrigerator	2,820	2,807	162,419	108,284	66%	70,931	1,309	384	20,661	—	14,999	108,284
	Washing machine	2,952	2,950	92,801	69,664	75%	39,225	1,016	520	13,713	—	15,190	69,664
2006	Air conditioner	1,828	1,835	77,655	66,791	86%	23,910	5,031	2,023	30,275	—	5,552	66,791
	TV	4,127	4,094	117,849	91,092	77%	11,620	4,456	85	892	52,394	21,645	91,092
	Refrigerator	2,716	2,709	157,106	112,106	71%	67,042	1,722	268	20,312	—	22,762	112,106
	Washing machine	2,943	2,951	94,652	74,854	79%	39,857	1,050	544	14,018	—	19,385	74,854
2007	Air conditioner	1,890	1,872	78,715	68,861	87%	23,729	5,076	8,634	24,453	—	6,969	68,861
	TV	4,613	4,542	134,283	115,563	86%	13,881	4,951	73	1,199	68,269	27,190	115,563
	Refrigerator	2,725	2,724	159,763	116,683	73%	68,435	1,994	325	20,188	—	25,741	116,683
	Washing machine	2,884	2,879	94,101	77,231	82%	40,755	1,240	612	12,915	—	21,709	77,231
2008	Air conditioner	1,968	1,968	82,746	73,698	89%	24,403	5,406	9,344	25,696	—	8,849	
	TV	5,365	5,210	156,546	139,476	89%	15,800	5,719	77	1,448	83,749	32,683	
	Refrigerator	2,746	2,733	163,056	121,331	74%	70,095	2,401	414	20,293	—	28,128	
	Washing machine	2,821	2,818	94,010	79,894	84%	41,524	1,605	789	11,360	—	24,616	
2009	Air conditioner	2,154	2,114	88,530	78,069	88%	25,160	5,917	9,927	27,448	—	9,617	78,069
	TV CRT	10,320	9,213	269,145	232,475	86%	27,188	9,541	93	1,812	137,644	56,197	232,475
	LCD/PDP	218	179	2,625	1,963	74%	925	31	132	34	—	841	1,963
	Refrigerator	3,007	2,979	181,511	136,569	75%	77,045	2,269	538	22,770	—	33,947	136,569
	Washing machine	3,087	3,031	102,308	87,795	85%	46,200	1,514	941	12,047	—	27,093	87,795
2010	Air conditioner	3,142	3,071	127,850	112,848	88%	35,628	8,367	14,395	40,238	—	14,220	112,848
	TV CRT	17,368	15,607	434,983	373,899	85%	43,737	15,153	218	2,636	217,846	94,309	373,899
	LCD/PDP	654	564	7,000	5,549	79%	2,709	90	290	102	—	2,358	5,549
	Refrigerator/ Freezer	3,400	3,381	210,272	159,836	76%	88,121	2,895	1,479	25,887	—	41,454	159,836
	Washer/Dryer	3,136	3,162	108,555	93,816	86%	48,015	1,785	1,257	13,216	—	29,543	93,816
2011	Air conditioner	2,341	2,372	98,783	88,566	89%	26,972	6,445	11,184	31,615	—	12,350	88,566
	TV CRT	7,866	10,622	284,439	226,392	79%	28,482	10,154	172	1,782	122,452	63,350	226,392
	LCD/PDP	599	648	9,707	8,064	83%	3,814	112	406	87	—	3,645	8,064
	Refrigerator/ Freezer	2,843	2,836	175,723	139,090	79%	73,167	2,374	1,242	21,867	—	40,440	139,090
	Washer/Dryer	3,151	3,095	107,363	93,699	87%	47,660	1,776	1,332	12,901	—	30,030	93,699
2012	Air conditioner	2,359	2,358	97,909	89,206	91%	27,887	6,546	10,372	30,178	—	14,223	89,206
	TV CRT	2,282	2,467	67,401	55,522	82%	6,920	2,476	58	481	30,908	14,679	55,522
	LCD/PDP	491	483	9,253	8,053	87%	3,483	93	400	91	—	3,986	8,053
	Refrigerator/ Freezer	2,919	2,925	183,467	147,180	80%	77,121	2,795	1,104	21,682	—	44,478	147,180
	Washer/Dryer	3,145	3,108	109,992	95,606	86%	48,750	1,743	1,412	12,749	—	30,952	95,606
2013	Air conditioner	2,961	2,721	112,769	103,434	91%	31,847	7,434	12,124	34,711	—	17,318	103,434
	TV CRT	2,042	1,987	54,266	43,245	79%	5,623	1,917	51	394	23,176	12,084	43,245
	LCD/PDP	698	660	13,122	11,743	89%	4,857	122	546	149	—	6,069	11,743
	Refrigerator/ Freezer	3,432	3,224	205,607	164,909	80%	83,698	3,449	1,297	24,810	—	51,655	164,909
	Washer/Dryer	3,599	3,446	125,821	111,416	88%	55,484	2,088	1,819	15,170	—	36,855	111,416
2014	Air conditioner	2,225	2,465	102,155	94,213	92%	28,279	7,435	10,451	31,415	—	16,633	94,213
	TV CRT	1,872	1,849	49,352	37,446	75%	5,147	1,791	34	398	18,765	11,311	37,446
	LCD/PDP	847	834	16,629	14,806	89%	6,524	160	598	224	—	7,300	14,806
	Refrigerator/ Freezer	2,775	2,978	187,654	150,913	80%	76,131	3,392	1,280	22,547	—	47,563	150,913
	Washer/Dryer	3,142	3,349	124,195	110,294	88%	54,674	2,151	1,943	14,755	—	36,771	110,294
2015	Air conditioner	2,335	2,333	96,370	89,646	93%	27,166	6,652	8,308	31,025	—	16,495	89,646
	TV CRT	1,551	1,708	43,703	32,258	73%	4,695	1,647	28	231	15,838	9,819	32,258
	LCD/PDP	1,033	1,061	21,177	18,988	89%	9,022	236	756	346	—	8,628	18,988
	Refrigerator/ Freezer	2,799	2,799	173,861	142,586	82%	70,635	3,436	1,198	20,298	—	47,019	142,586
	Washer/Dryer	3,139	3,109	117,726	106,904	90%	51,332	2,240	1,995	13,856	—	37,481	106,904

4.40 Implementation of Recycling of Specified Home Appliances (2)

Collected and disposal weight of Freon used as a refrigerant

		Collected weight of Freon used as a refrigerant [kg]	Disposal weight of Freon used as a refrigerant [kg]
FY2003	Air conditioner	860,496	-
	Refrigerator/Freezer	286,646	-
2004	Air conditioner	994,732	976,479
	Refrigerator/Freezer	310,915	312,257
2005	Air conditioner	1,122,462	1,117,923
	Refrigerator/Freezer	310,701	309,734
2006	Air conditioner	1,043,778	1,047,979
	Refrigerator/Freezer	297,619	297,868
2007	Air conditioner	1,089,423	1,084,342
	Refrigerator/Freezer	298,544	298,145
2008	Air conditioner	1,166,887	1,170,356
	Refrigerator/Freezer	299,118	301,307
2009	Air conditioner	1,304,142	1,292,694
	Refrigerator/Freezer	319,896	315,323
	Washer/Dryer	847	818
2010	Air conditioner	1,870,472	1,855,076
	Refrigerator/Freezer	357,145	353,175
	Washer/Dryer	1,370	1,307
2011	Air conditioner	1,477,875	1,466,194
	Refrigerator/Freezer	284,360	282,469
	Washer/Dryer	2,523	2,400
2012	Air conditioner	1,478,610	1,469,477
	Refrigerator/Freezer	277,886	274,984
	Washer/Dryer	3,399	3,226
2013	Air conditioner	1,726,110	1,700,328
	Refrigerator/Freezer	292,057	286,221
	Washer/Dryer	6,756	6,519
2014	Air conditioner	1,576,865	1,040,914
	Refrigerator/Freezer	247,927	189,409
	Washer/Dryer	11,815	11,438
2015	Air conditioner	1,504,769	387,728
	Refrigerator/Freezer	210,076	103,021
	Washer/Dryer	14,654	11,182

Collected and disposal weight of the liquefied Freon included in insulation material

		Collected weight of the liquefied Freon included in insulation material [kg]	Disposal weight of the liquefied Freon included in insulation material [kg]
FY2006	Refrigerator/Freezer	592,511	589,832
2007	Refrigerator/Freezer	574,535	562,020
2008	Refrigerator/Freezer	556,754	554,472
2009	Refrigerator/Freezer	543,502	514,701
2010	Refrigerator/Freezer	577,217	562,607
2011	Refrigerator/Freezer	433,566	421,381
2012	Refrigerator/Freezer	405,387	397,447
2013	Refrigerator/Freezer	432,354	420,404
2014	Refrigerator/Freezer	392,367	386,262
2015	Refrigerator/Freezer	333,840	325,779

Source: Compiled from "About the publication of the results of recycling Home Appliances by each Home Appliance manufactures" by Association for Electric Home Appliances

4.41 Volumes of construction waste by type

(FY2012)

Type	Volume (1,000 t)	Percentage (%)
Asphalt, concrete blocks	25,770	35
Concrete blocks	30,920	43
Construction sludge	6,570	9
Mixed construction waste	2,800	4
Waste wood generated from construction	5,000	7
Others	1,640	2
Nation-wide total	72,690	100

Notes:

・The total volume may not foot due to rounding off.

・Waste wood generated from construction includes the volume of logging wood and root wood and the like.

Source: "Survey on Construction By-products 2012," Ministry of Land, Infrastructure, Transport and Tourism

4.42 Recycling of construction waste by item

（Unit：%）

	Construction waste	Asphalt, concrete blocks	Concrete blocks	Wood generated from construction (excludes Reduction)	Wood generated from construction (includes Reduction)	Construction sludge (includes Reduction)	Mixed construction waste (10,000 t)
FY 1990	42	50	48	56	—	21	31
1995	58	81	65	40	—	14	11
2000	85	98	96	38	82	41	485
2002	92	99	98	62	90	68	337
2005	92	98	98	68	91	75	293
2008	94	98	97	80	89	85	267
2012	96	99	99	89	94	85	280

Notes:
- Wood generated from construction includes the number of logging wood and root wood and the like.
- Recycling, etc.=Amount of recycling, etc. / amount of generation
- Reduction refers to incineration and dehydration, etc.

Source: Compiled from "Survey on Construction By-products 2012," Ministry of Land, Infrastructure, Transport and Tourism

4.43 Generation and treatment of food waste

FY 2012 （Unit：10,000 t）

	Total amount generated	Amount disposed					
		Incinerated and/or landfilled	Amount recycled				
			Composted	Animal Feed Produced	Others	Total	Amount reduced
Municipal waste	1,953	334	249	983	162	1,394	225
Household	839	—	—	—	—	—	—
Businesses	889	—	—	—	—	—	—
Industrial waste	822	767	—	—	—	54	—
Total	2,775	1,101	—	—	—	1,449	—

Sources:
- "FY2014 Food Balance Sheet," Ministry of Agriculture, Forestry, Fisheries.
- "Amount of Food Waste Generated and Recycling (FY2014)" Ministry of Agriculture, Forestry, Fisheries.
- "FY2014 Report on Recycling by Food Industry," by Ministry of Agriculture, Forestry, Fisheries.
- Municipal wastes from households and businesses are estimates by Ministry of the Environment based on its publication, "Generation and Treatment of Municipal Waste and Industrial Waste".
- "FY2016 Report on Performance Survey on Food Recycling Resource," by Ministry of the Environment.

4.44 Collection of used cars (number of cases reported)

（Unit: cars）

	Type of process					
	Collection process	CFC recovery process	Dismantling process*2	Among them Dismantling process→ Dismantling process	Crushing process	Among them Crushing process→ Crushing process
FY 2004	471,057	383,343	425,640	(14,056)	542,725	(187,952)
2005	3,048,539	2,419,473	3,167,138	(116,306)	4,823,812	(1,845,470)
2006	3,573,215	2,621,280	3,738,877	(154,925)	5,848,370	(2,306,910)
2007	3,708,996	2,792,803	3,867,349	(149,065)	6,294,748	(2,623,147)
2008	3,580,882	2,798,418	3,716,791	(137,361)	6,129,797	(2,610,509)
2009	3,918,415	3,221,770	4,076,424	(169,152)	6,841,394	(3,007,090)
2010	3,648,428	3,048,627	3,833,989	(154,972)	6,516,840	(2,867,100)
2011	2,963,642	2,441,715	3,083,162	(123,358)	5,177,173	(2,288,072)
2012	3,405,662	2,900,043	3,567,777	(152,499)	6,053,494	(2,698,623)
2013	3,433,356	2,974,479	3,587,714	(147,664)	6,064,548	(2,696,864)
2014	3,331,901	2,927,357	3,503,381	(147,624)	5,901,803	(2,616,185)
2015	3,156,459	2,774,004	3,306,187	(136,453)	5,531,795	(2,457,437)

Note:
The figures for fiscal year 2004 are the totals from January to March, 2005 after the enforcement of the law.

Source: Compiled from "State of enforcement with the End-of-Life Vehicle Recycling Law 2015" by Ministry of Economy, Trade and Industry as well as by Ministry of the Environment

4.45 Rate of recycling of Shredder dust (ASR) and the like by automobile manufacturers

（Unit：%）

		Shredder dust	Airbag etc.
Goals	2005～	30	85
	2010～	50	
	2015～	70	
Actual	FY 2004	49～69.1	91.6～100
	FY 2005	48.0～70.0	93.0～94.7
	FY 2006	63.7～75.0	93.5～95.1
	FY 2007	64.2～78.0	92.0～94.7
	FY 2008	72.4～80.5	94.1～94.9
	FY 2009	77.5～82.1	93.2～100
	FY 2010	79.9～87	93～100
	FY 2011	92～94	92～100
	FY 2012	93～96.8	93～95
	FY 2013	96～97.7	94～95
	FY 2014	96.8～98.1	94～95
	FY 2015	96.5～98.8	93～94

Notes:

・Recycle rate is indicated by the following equation.

$$\frac{\text{Amount of ASR loaded into regeneration facilities} + \text{Amount equivalent to ASR contained in dismantled ELVs loaded into electric furnaces} - \text{Amount of ASR-originated residue from regeneration facilities and electric furnaces}}{\text{Total ASR weight collected by automobile manufactures} + \text{Amount equivalent to ASR contained in dismantled ELVs loaded into electric furnaces}}$$

・ASR : Automotive shredder residue, a mixture of metallic waste resulting from the shredding of automobiles.

・Airbags: Total weight of the airbags that have been regenerated to be used as parts of the products / Total weight of the airbags that have been collected by automobile manufactures and the like.

・The figures for fiscal year 2004 are the totals from January to March, 2005 after the enforcement of the law.

Source: Compiled from "State of Enforcement with the End-of-Life Vehicle Recycling Law 2015" by Ministry of Economy, Trade and Industry respectively

4.46 Voluntary collection and resource regeneration of PC and small rechargeable batteries

（1） Voluntary collection

PC (household and business total)

Small rechargeable batteries

Product groups	Weight (t)
NiCad batteries	715
Nickel hydride batteries	187
Lithium Rechargeable Batteries	365
Small valve regulated lead-acid batteries	725
Total	1,993

PC

Product groups	Number collected (piece)
Desktop PC	133,051
Notebook PC	191,285
CRT-type display device	23,342
LCD display device	162,153
Total	509,831

（2）Resource regeneration

PC

Product groups	Treatment amount (t)	Resource regeneration amount (t)	Resource regeneration rate (%)	Statutory target (%)
Desktop PC	1,249	978	78.3	50
Notebook PC	521	319	61.1	20
CRT type display device	385	285	73.9	55
LCD display device	1,184	879	74.2	55
Total	3,340	2,460		

Small rechargeable batteries

Product groups	Treatment amount (t)	Resource regeneration amount (t)	Resource regeneration rate (%)	Statutory target (%)
NiCad batteries	643	460	71.5	60
Nickel hydride batteries	169	129	76.6	55
Lithium Rechargeable Batteries	339	189	55.9	30
Small valve regulated lead-acid batteries	725	363	50.1	50
Total	1,876	1,141		

Note:

Resource regeneration refers to using it as reproduction resource.

The total volume may not foot due to rounding up/down.

Source: "The Publication of the implementation status of voluntary collection and resource regeneration by each project under Act on the Promotion of Effective Utilization of Resources," Ministry of Economy, Trade and Industry

5.01 Number of Specified Sites in accordance with the Water Pollution Control Act

	Total number of Specified Facilites	Breakdown by effluent discharge regulations			
		Effluent discharge per day is more than or equal to 50 m^3	Specified Workplaces that Use Harmful Substances	Effluent discharge per day is less than 50 m^3	Specified Workplaces that Use Harmful Substances
FY1985	279,762	29,890	3,900	249,872	9,507
	(5,035)	(4,797)	(849)	(238)	(25)
1986	280,443	29,802	3,854	250,641	9,035
	(4,740)	(4,518)	(765)	(222)	(20)
1987	281,057	29,968	3,983	251,089	9,253
	(4,728)	(4,514)	(800)	(214)	(19)
1988	285,860	31,420	4,067	254,440	9,030
	(5,168)	(4,901)	(817)	(267)	(25)
1989	287,679	31,692	4,295	255,987	12,953
	(5,018)	(4,757)	(759)	(261)	(16)
1990	290,328	32,190	4,328	258,138	13,295
	(5,008)	(4,742)	(803)	(266)	(16)
1991	304,663	36,548	4,387	268,115	14,022
	(5,004)	(4,733)	(771)	(271)	(20)
1992	303,810	36,901	4,430	266,909	13,613
	(5,009)	(4,751)	(801)	(258)	(22)
1993	305,318	36,939	5,025	268,379	13,233
	(4,741)	(4,507)	(848)	(234)	(22)
1994	305,987	37,948	5,295	268,039	13,546
	(5,106)	(4,849)	(918)	(257)	(29)
1995	303,807	38,417	5,258	265,390	13,024
	(5,124)	(4,861)	(917)	(263)	(28)
1996	303,100	38,534	5,128	264,566	13,146
	(4,989)	(4,745)	(893)	(244)	(26)
1997	298,967	38,127	4,934	260,840	12,707
	(4,676)	(4,455)	(836)	(221)	(20)
1998	298,044	38,386	5,178	259,658	12,432
	(4,599)	(4,382)	(861)	(217)	(16)
1999	298,529	38,415	4,712	260,114	12,005
	(4,528)	(4,299)	(718)	(229)	(18)
2000	298,245	38,502	4,815	259,743	12,127
	(4,462)	(4,221)	(734)	(241)	(22)
2001	297,973	38,751	5,091	259,222	11,892
	(4,617)	(4,365)	(811)	(252)	(29)
2002	296,157	38,292	4,582	257,865	10,975
	(4,551)	(4,304)	(774)	(247)	(27)
2003	293,481	37,226	4,434	256,255	10,926
	(4,289)	(4,027)	(664)	(262)	(27)
2004	292,379	37,017	4,475	255,362	10,526
	(4,188)	(3,926)	(677)	(262)	(32)
2005	290,759	36,543	4,424	254,216	10,567
	(4,158)	(3,874)	(603)	(284)	(33)
2006	289,091	36,139	4,471	252,952	11,234
	(4,118)	(3,842)	(651)	(276)	(43)
2007	280,517	35,506	4,330	245,011	10,757
	(3,906)	(3,662)	(617)	(244)	(37)
2008	276,952	34,807	4,336	242,145	10,611
	(3,854)	(3,595)	(639)	(259)	(36)
2009	274,039	34,271	4,179	239,768	10,348
	(3,813)	(3,543)	(628)	(270)	(31)
2010	271,242	33,964	4,156	237,278	10,119
	(3,743)	(3,492)	(622)	(251)	(24)
2011	266,860	33,529	4,025	233,331	10,046
	(3,685)	(3,440)	(623)	(245)	(24)
2012	271,168	33,067	3,931	233,146	10,917
	(3,559)	(3,321)	(545)	(238)	(28)
2013	269,847	32,589	3,877	232,300	11,388
	(3,485)	(3,241)	(541)	(244)	(31)
2014	267,328	32,381	3,813	230,225	11,207
	(3,444)	(3,202)	(538)	(242)	(30)
2015	264,924	31,935	3,785	228,871	11,001
	(3,361)	(3,150)	(513)	(211)	(26)

Note:
Parenthesized is the number of specified sites with the specified facilities, in accordance with Law concerning Special Measures for Conservation of the Environment of the Seto Inland Sea.

Source: "Enforcement of Water Pollution Control Law etc.," Ministry of the Environment

5.02 Number of specified Facilities by prefecture in accordance with Water Pollution Control Act

	2000	2001	2002	2003	2004	2005	2006	2007	2008	2009	2010	2011	2012	2013	2014	2015
Hokkaido	7,601	7,356	7,127	6,936	6,818	6,569	6,372	6,332	6,242	6,186	6,252	6,129	6,361	6,130	6,112	6,108
Aomori	5,290	5,307	5,353	5,299	5,445	5,401	5,494	5,374	5,035	4,984	4,974	4,861	4,856	4,788	4,795	4,726
Iwate	5,685	5,971	5,489	5,521	5,414	5,339	5,346	5,287	5,282	5,266	5,228	5,173	5,288	5,300	5,268	5,176
Miyagi	6,918	6,703	6,714	6,699	6,746	6,725	6,717	6,761	5,787	5,758	5,771	5,703	5,792	5,631	5,539	5,583
Akita	4,335	4,018	4,380	4,405	4,401	4,241	4,310	4,181	3,974	3,939	3,847	3,737	3,781	3,735	3,638	3,585
Yamagata	4,284	4,265	4,235	4,206	4,245	4,235	4,289	4,331	4,364	4,282	3,660	3,672	3,712	3,753	3,760	3,760
Fukushima	8,011	8,038	7,991	7,940	7,975	7,973	7,899	7,892	7,827	7,711	7,643	7,649	7,652	8,037	7,975	7,870
Ibaraki	9,650	9,553	9,750	9,767	9,783	10,039	9,580	8,634	9,346	9,327	9,279	9,000	9,353	8,905	8,563	8,523
Tochigi	8,177	8,415	8,445	8,490	8,183	8,174	8,220	8,240	8,239	8,234	8,233	8,233	8,251	8,198	8,173	8,204
Gunma	5,119	5,211	5,230	5,237	5,345	5,387	5,484	5,376	5,270	5,285	5,300	5,308	5,275	5,242	5,143	5,016
Saitama	10,146	10,383	10,276	10,081	10,161	9,314	9,608	9,670	9,670	9,625	9,461	9,577	9,590	9,482	9,321	9,249
Chiba	12,062	11,850	11,836	11,491	11,302	11,199	11,022	10,787	10,581	10,401	10,260	10,194	10,278	10,597	10,487	10,189
Tokyo	1,897	1,874	1,777	1,855	1,878	2,216	2,289	2,325	2,304	2,295	2,265	2,218	3,352	3,333	3,390	3,269
Kanagawa	9,492	9,293	8,960	8,985	8,904	8,775	8,564	8,229	8,142	8,017	7,915	7,800	7,832	7,792	7,767	7,682
Niigata	10,890	11,040	10,857	10,841	10,784	10,787	10,694	10,635	10,593	10,498	10,145	9,477	8,917	8,664	8,621	8,598
Toyama	3,367	3,382	3,386	3,382	3,389	3,412	3,430	3,458	3,472	3,486	3,452	3,383	3,421	3,448	3,454	3,452
Ishikawa	4,378	4,335	4,180	4,079	4,064	3,979	3,979	3,982	3,837	3,911	3,871	3,824	3,835	3,856	3,840	3,825
Fukui	2,900	2,686	2,788	2,813	2,891	2,906	2,772	2,648	2,542	2,474	2,457	2,430	2,431	2,398	2,375	2,380
Yamanashi	5,159	5,361	5,385	5,361	5,301	5,312	5,302	5,195	5,148	5,153	5,124	5,067	5,049	5,013	4,854	4,872
Nagano	12,743	13,141	13,073	13,046	13,058	13,077	12,986	12,941	12,911	12,871	12,670	12,499	12,587	12,447	12,434	12,363
Gifu	9,055	8,885	8,898	8,843	8,873	8,874	8,827	8,820	8,790	8,714	8,614	8,545	8,538	8,573	8,473	8,331
Shizuoka	12,466	12,609	12,581	12,573	12,552	12,476	12,378	12,535	12,499	11,853	11,941	11,848	12,290	11,541	11,501	11,350
Aichi	15,318	14,540	14,372	14,138	14,001	13,849	13,695	13,393	13,139	12,894	12,658	12,468	12,203	12,172	11,956	11,818
Mie	8,699	8,641	8,544	8,592	8,663	8,618	8,484	8,516	8,549	8,568	8,547	8,513	8,525	8,565	8,333	8,301
Shiga	3,787	3,637	3,580	3,523	3,418	3,422	3,284	3,238	2,957	2,902	3,165	2,866	2,897	3,467	3,414	3,453
Kyoto	4,664	4,949	4,920	4,798	4,760	4,874	5,063	5,048	5,036	5,038	4,791	4,693	4,579	4,524	4,473	4,501
Osaka	5,920	5,717	5,516	5,362	5,230	5,214	4,936	5,001	4,965	4,468	4,029	3,403	4,569	4,572	4,470	4,378
Hyogo	10,838	10,759	10,700	10,667	10,538	10,027	9,986	9,825	9,783	9,680	9,071	8,984	9,283	9,344	9,132	9,106
Nara	3,215	3,247	3,058	3,070	3,270	3,332	3,340	3,358	3,356	3,355	3,101	3,107	3,124	3,254	3,095	3,095
Wakayama	3,585	3,600	3,631	3,672	3,721	3,953	3,951	3,871	3,843	3,853	3,678	3,643	3,678	3,705	3,991	3,752
Tottori	2,389	2,461	2,465	2,430	2,366	2,269	2,351	2,345	2,370	2,326	2,316	2,309	2,333	2,396	2,396	2,333
Shimane	3,941	3,902	3,875	3,355	3,330	3,325	3,341	3,348	3,256	3,233	3,179	3,101	3,123	3,126	3,124	3,126
Okayama	5,916	5,783	5,894	5,898	5,896	5,723	5,713	5,680	5,604	5,571	5,031	5,020	5,020	4,801	4,645	4,548
Hiroshima	7,304	7,263	7,315	7,289	7,270	7,520	7,159	6,636	6,491	6,308	5,788	5,764	5,799	5,814	5,772	5,953
Yamaguchi	4,394	4,800	4,781	4,780	4,251	4,249	4,241	4,243	4,242	4,236	3,900	3,911	3,950	3,946	3,849	3,841
Tokushima	4,083	4,113	4,224	4,256	4,303	4,323	4,316	4,324	4,334	4,356	4,148	4,159	4,175	4,187	4,177	4,192
Kagawa	4,891	4,982	4,924	4,924	4,931	4,929	4,923	4,841	4,700	4,580	4,290	4,296	4,280	4,108	4,090	4,041
Ehime	5,969	5,899	5,743	5,290	5,236	5,077	5,046	4,972	4,859	4,726	4,329	4,185	4,197	4,132	4,082	4,058
Kochi	3,310	3,301	3,291	3,287	3,300	3,320	3,288	3,309	3,318	3,203	3,210	3,049	2,951	2,947	2,903	2,888
Fukuoka	6,821	6,776	6,789	6,583	6,545	6,462	6,544	6,184	6,096	5,899	5,510	5,048	5,200	5,372	5,365	5,323
Saga	2,889	2,885	2,891	2,872	2,896	2,908	2,907	2,952	2,980	2,991	2,906	2,733	3,497	3,539	2,739	2,704
Nagasaki	5,720	5,738	5,647	5,634	5,397	5,468	5,651	5,789	5,889	5,954	6,182	6,144	5,421	5,639	6,381	6,487
Kumamoto	8,333	8,376	8,413	8,474	8,532	8,584	8,865	3,579	3,103	3,198	3,211	3,299	3,445	3,471	3,479	3,502
Oita	5,242	5,428	5,466	5,477	5,607	5,546	5,652	5,733	5,624	5,663	5,273	5,374	5,434	5,344	5,355	5,278
Miyazaki	3,989	4,029	4,059	3,953	4,009	3,942	4,009	4,066	4,107	4,176	4,189	4,154	4,051	3,883	3,867	3,869
Kagoshima	5,866	5,917	5,724	5,763	5,825	5,817	5,287	5,246	5,236	5,284	5,311	5,314	5,479	5,416	5,477	5,479
Okinawa	1,537	1,554	1,624	1,544	1,572	1,598	1,497	1,387	1,260	1,307	1,324	1,311	1,355	1,377	1,383	1,426
Total	298,245	297,973	296,157	293,481	292,379	290,759	289,091	280,517	276,952	274,039	267,499	263,175	267,009	265,964	263,431	261,563

Source: "Enforcement of Water Pollution Control Law etc.," Ministry of the Environment

5.03 Results of the comprehensive survey of release of water pollution substances

(FY2015)

	Number of subjected business establishments	Effluent concentration （mg/L）		
		Average	Maximum	Minimum
BOD	19,837	6.20	320.00	0.00
COD	16,057	10.60	300.00	0.00
Cadmium and its compounds	252	0.00	0.10	0.00
Organic phosphorus compound	132	0.03	0.13	0.00
Hexavalent chromium compounds	504	0.03	0.90	0.00
Arsenic and its compounds	247	0.01	0.41	0.00
Total mercury	186	0.00	0.04	0.00
Alkyl mercury compounds	122	0.00	0.00	0.00
PCB	117	0.00	0.00	0.00
Trichloroethylene	194	0.01	0.41	0.00
Tetrachloroethylene	167	0.00	0.24	0.00

Source: "Comprehensive survey of release of water pollution substance in fiscal year 2015," Ministry of the Environment

5.04 Rate of compliance with environmental quality on health issues (non-achievement rate)

	FY2015									FY2014			FY2013		
	Rivers		Lakes		Sea areas		Total			Total			Total		
	a:Number of exceeding points	b:Number of monitoring points	a:Number of exceeding points	b:Number of monitoring points	a:Number of exceeding points	b:Number of monitoring points	a:Number of exceeding points	b:Number of monitoring points	a / b (%)	a:Number of exceeding points	b:Number of monitoring points	a / b (%)	a:Number of exceeding points	b:Number of monitoring points	a / b (%)
Cadmium	4	3,085	0	261	0	828	4	4,174	0.10	3	4,181	0.07	4	4,171	0.10
Total cyanide	0	2,771	0	222	0	696	0	3,689	0	0	3,700	0	0	3,686	0
Lead	4	3,216	0	261	0	846	4	4,323	0.09	2	4,341	0.05	2	4,346	0.05
Hexavalent chromium	0	2,869	0	236	0	787	0	3,892	0	0	3,902	0	0	3,920	0
Arsenic	22	3,172	1	262	0	843	23	4,277	0.54	22	4,289	0.51	25	4,290	0.58
Total mercury	0	2,956	0	245	0	839	0	4,040	0	0	4,046	0	1	4,069	0
Alkyl mercury	0	622	0	70	0	179	0	871	0	0	931	0	0	894	0
PCB	0	1,764	0	156	0	425	0	2,345	0	0	2,311	0	0	2,337	0
Dichloromethane	0	2,647	0	211	0	568	0	3,426	0	0	3,448	0	0	3,490	0
Carbon tetrachloride	0	2,613	0	209	0	541	0	3,363	0	0	3,390	0	0	3,401	0
1,2-dichloroethane	1	2,659	0	211	0	566	1	3,436	0.03	1	3,437	0	1	3,466	0
1,1-dichloroethylene	0	2,665	0	211	0	566	0	3,442	0	0	3,425	0	0	3,476	0
cis-1,2-dichloroethylene	0	2,650	0	211	0	566	0	3,427	0	0	3,427	0	0	3,476	0
1,1,1-trichloroethane	0	2,668	0	217	0	574	0	3,459	0	0	3,467	0	0	3,500	0
1,1,2-trichloroethane	0	2,649	0	211	0	566	0	3,426	0	0	3,426	0	0	3,474	0
Trichloroethylene	0	2,706	0	223	0	579	0	3,508	0	0	3,531	0	0	3,600	0
Tetrachloroethylene	0	2,707	0	223	0	579	0	3,509	0	0	3,530	0	0	3,600	0
1,3-dichloropropene	0	2,660	0	218	0	525	0	3,403	0	0	3,411	0	0	3,439	0
Thiuram	0	2,602	0	214	0	517	0	3,333	0	0	3,360	0	0	3,368	0
Simazine	0	2,654	0	211	0	512	0	3,377	0	0	3,338	0	0	3,401	0
Thiobencarb	0	2,631	0	211	0	512	0	3,354	0	0	3,323	0	0	3,392	0
Benzene	0	2,611	0	212	0	568	0	3,391	0	0	3,393	0	0	3,440	0
Selenium	0	2,644	0	205	0	574	0	3,423	0	0	3,416	0	0	3,458	0
Nitrate nitrogen and nitrite nitrogen	2	3,064	0	351	0	721	2	4,136	0.05	2	4,247	0.05	2	4,074	0.05
Fluorine	14 (23)	2,654 (2,663)	0	233 (233)	-	- (22)	14 (23)	2,887 (2,918)	0.48	17 (29)	2,916 (2,952)	0.58	14 (25)	2,919 (2,959)	0.48
Boron	1 (68)	2,555 (2,622)	0 (2)	226 (228)	-	- (20)	1 (70)	2,781 (2,870)	0.04	1 (79)	2,782 (2,882)	0.04	1 (100)	2,779 (2,905)	0.04
1,4-dioxane	0	2,574	0	212	0	588	0	3,374	0	0	3,373	0	0	3,387	0
Total (total number of points)	45 <48>	3,896	1 <1>	406	0 <0>	1,071	46 <49>	5,373	0.86	46 <48>	5,375	0.86	44 <50>	5,409	0.81

Notes:

・Nitrate nitrogen and nitrite nitrogen, fluorine, and boron have been included in water quality measurements across the country since 1999.

・Environmental standards of fluorine and boron are not applicable to sea areas.

・Measurement points of sea areas of these two items as described in ( ) are for reference purpose only and are excluded from environmental standards as well as the total field. Also, in rivers and lakes, a number of points, not including exceeding points of environmental standards which are affected in the sea, are described. These points are described below ( ) for reference.

・Upper number in the "Total" field: the number of points without overlaps.

・Lower number in the total field: gross number of points counted as one when it detects multiple exceeding values beyond environmental standards. Non-achievement rates are calculated based on the number "46" which is equivalent to the number of points that detect multiple exceeding values beyond the environmental standards.

Source: "Results of water quality measurement in public waters FY2015," Ministry of the Environment

5.05 Rate of compliance for environmental standards (BOD or COD)

	Rivers	Lakes	Sea areas	Tokyo Bay	Ise Bay	Osaka Bay	Seto Inland Sea*	Seto Inland Sea	Ariake Sea	Yatsushiro Sea	Total	Number of Water Areas
FY1974	51.3	41.9	70.7	44	47	67	-	67	88	75	54.9	1,927
1975	57.1	38.6	72.4	44	53	67	-	69	81	100	59.6	2,394
1976	57.6	40.7	76.4	67	47	67	-	72	88	86	60.6	2,586
1977	58.5	35.2	76.9	61	47	67	-	73	81	93	61.2	2,769
1978	59.5	37.6	75.3	61	53	67	-	75	94	93	61.7	2,814
1979	65.0	41.8	78.2	61	53	67	-	76	88	93	66.7	2,866
1980	67.2	41.6	79.8	61	53	67	-	72	88	79	68.7	2,913
1981	63.3	42.7	81.6	61	59	75	81	81	94	86	66.0	2,935
1982	65.3	41.7	81.3	61	41	67	83	81	94	93	67.5	2,982
1983	65.9	40.8	79.8	61	53	67	83	81	94	93	67.7	3,009
1984	63.4	42.7	81.3	61	47	67	81	81	94	100	66.1	3,044
1985	67.7	41.2	80.0	61	47	67	81	81	94	93	69.0	3,052
1986	68.6	40.0	81.2	63	59	67	79	78	94	100	69.9	3,061
1987	68.3	43.1	82.6	63	47	67	81	80	94	86	70.1	3,070
1988	73.3	44.2	82.7	63	65	67	81	81	88	93	73.9	3,083
1989	73.8	46.3	82.4	63	53	67	79	78	94	93	74.3	3,092
1990	73.6	44.2	77.6	63	59	67	75	75	94	100	73.1	3,103
1991	75.4	42.3	80.2	63	59	67	79	78	94	100	75.0	3,123
1992	75.4	44.6	80.9	74	53	67	79	78	88	100	75.2	3,149
1993	77.3	46.1	79.5	63	65	67	73	72	94	100	76.5	3,147
1994	67.9	40.6	79.2	63	47	67	77	76	94	100	68.9	3,170
1995	72.3	39.5	78.6	63	56	67	75	75	93	100	72.1	3,181
1996	73.6	42.0	81.1	63	56	67	79	78	93	100	73.7	3,231
1997	80.9	41.0	74.9	63	44	67	75	75	93	86	78.1	3,244
1998	81.0	40.9	73.6	63	44	67	75	76	80	79	77.9	3,258
1999	81.5	45.1	74.5	63	50	67	75	75	93	79	78.7	3,270
2000	82.4	42.3	75.3	63	56	67	77	76	87	43	79.4	3,274
2001	81.5	45.8	79.3	68	56	67	75	74	93	86	79.5	3,291
2002	85.1	43.8	76.9	68	44	67	69	69	87	86	81.7	3,300
2003	87.4	55.2	76.2	68	50	67	70	70	93	86	83.8	3,301
2004	89.8	50.9	75.5	63	50	67	67	67	80	71	85.2	3,313
2005	87.2	53.4	76.0	63	50	67	74	74	87	64	83.4	3,319
2006	91.2	55.6	74.5	68	44	67	71	70	87	64	86.3	3,334
2007	90.0	50.3	78.7	63	56	67	78	77	80	86	85.8	3,324
2008	92.3	53.0	76.4	74	56	67	72	72	93	79	87.4	3,331
2009	92.3	50.0	79.2	68	56	67	77	77	93	86	87.6	3,335
2010	92.5	53.2	78.3	63	56	67	81	80	87	79	87.8	3,337
2011	93.0	53.7	78.4	68	56	67	79	78	80	64	88.2	3,326
2012	93.1	55.3	79.8	63	56	67	79	78	87	86	88.6	3,329
2013	92.0	55.1	77.3	63	56	67	77	77	87	79	87.3	3,335
2014	93.9	55.6	79.1	63	50	67	78	77	93	86	89.1	3,339
2015	95.8	58.7	81.1	63	69	75	77	77	93	86	91.1	3,340

Notes:
- BOD is applied for Rivers, COD for Lakes and Sea Areas.
- Achievement rate (%) = (number of water areas meeting the standards / number of water areas in a specified type) × 100
- Mikawa Bay is included in Ise Bay.
- "Seto Inland Sea*," the column shadowed with a gray does not include Osaka Bay. Osaka Bay is included in "Seto Inland Sea. "

Source: "Measurement Results of Water Quality in Public Waters FY2015," Ministry of the Environment

5.06 Water quality of enclosed sea area (annual average of COD)

			FY 2006	2007	2008	2009	2010	2011	2012	2013	2014	2015	Average of the last 10 years
Tokyo Bay	Average (mg/L)		2.7	2.5	2.6	2.5	2.8	2.7	2.7	2.6	2.8	2.6	2.7 mg/L
		Category A	2.0	1.8	2.3	1.7	2.3	2.1	2.3	2.0	2.2	2.2	
		Category B	2.7	2.5	2.4	2.5	2.9	2.7	2.7	2.5	2.8	2.5	
		Category C	3.0	2.9	2.9	2.8	3.1	3.0	3.2	2.9	3.1	2.8	
	Total points of environment standards ①		49	49	49	49	49	49	49	49	49	49	
	Environment standards point to satisfy standard level ②		30	30	38	35	25	35	29	29	29	33	
	②／①（%）		61	61	78	71	51	71	59	59	59	67	
Ise Bay (including Mikawa Bay)	Average (mg/L)		3.3	3.2	3.4	2.9	3.1	2.8	2.8	3.1	3.2	3.1	3.1 mg/L
		Category A	3.0	2.6	3.1	2.5	2.6	2.5	2.6	2.8	2.8	2.6	
		Category B	3.0	3.2	3.0	2.8	2.8	2.6	2.7	2.8	2.8	2.7	
		Category C	3.8	3.7	4.0	3.2	3.8	3.5	3.8	3.7	3.9	3.9	
	Total points of environment standards ③		32	32	32	32	32	32	32	32	32	32	
	Environment standards point to satisfy standard level ④		13	17	15	17	17	16	17	19	15	19	
	④／③（%）		41	53	47	53	53	50	53	59	47	59	
Osaka Bay	Average (mg/L)		2.7	2.7	2.8	2.8	2.8	2.5	2.7	2.6	2.4	2.6	2.7 mg/L
		Category A	2.4	2.4	2.5	2.4	2.4	2.3	2.4	2.4	2.1	2.3	
		Category B	2.8	2.8	2.9	2.8	3.0	2.7	2.9	2.7	2.6	2.7	
		Category C	3.0	2.9	3.0	3.2	3.1	2.5	2.8	2.8	2.7	2.7	
	Total points of environment standards ⑤		28	28	28	28	28	28	28	28	28	28	
	Environment standards point to satisfy standard level⑥		18	16	15	15	16	18	15	17	18	19	
	⑥／⑤（%）		64	57	54	54	57	64	54	61	64	68	
Seto Inland Sea (excluding Osaka Bay)	Average (mg/L)		2.1	2.0	2.0	1.9	1.9	1.9	1.9	2.1	2.0	2.0	2.0 mg/L
		Category A	1.9	1.8	1.8	1.7	1.7	1.7	1.8	1.8	1.8	1.7	
		Category B	2.3	2.2	2.3	2.2	2.2	2.2	2.0	2.0	2.2	2.3	
		Category C	3.0	2.8	2.7	2.8	2.7	2.7	2.7	2.5	2.6	2.7	
	Total points of environment standards ⑦		426	426	423	401	421	424	424	424	424	424	
	Environment standards point to satisfy standard level ⑧		277	322	297	310	323	323	334	325	332	308	
	⑧／⑦（%）		65	76	70	77	77	76	79	77	78	73	
Seto Inland Sea (including Osaka Bay)	Average (mg/L)		2.1	2.0	2.1	2.0	2.0	2.0	2.0	2.1	2.0	2.0	2.0 mg/L
		Category A	1.9	1.8	1.8	1.7	1.7	1.8	1.8	1.9	1.8	1.8	
		Category B	2.4	2.3	2.3	2.2	2.2	2.2	2.0	2.0	2.2	2.3	
		Category C	3.0	2.8	2.8	2.8	2.8	2.7	2.6	2.5	2.6	2.7	
	Total points of environment standards ⑨		454	454	451	429	449	452	452	452	452	452	
	Environment standards point to satisfy standard level ⑩		295	338	312	325	339	340	349	342	350	327	
	⑩／⑨（%）		65	74	69	76	76	75	77	76	77	72	
Ariake Sea	Average (mg/L)		1.8	1.9	1.8	1.8	1.9	2.3	2.3	2.1	1.8	1.9	2.0 mg/L
		Category A	2.0	2.2	1.9	2.0	2.2	2.1	2.1	2.0	2.0	2.1	
		Category B	1.5	1.6	1.4	1.5	1.5	2.6	2.3	2.2	1.5	1.5	
		Category C	2.0	2.1	2.1	2.2	2.3	2.2	2.0	2.0	2.2	2.2	
	Total points of environment standards ⑪		34	34	34	34	34	34	34	34	34	34	
	Environment standards point to satisfy standard level ⑫		26	25	28	28	25	20	19	26	28	27	
	⑫／⑪（%）		76	74	82	82	74	59	56	76	82	79	
Yatsushiro Sea	Average (mg/L)		1.9	1.9	1.6	1.7	1.8	1.9	1.9	1.9	1.7	1.7	1.8 mg/L
		Category A	1.8	1.7	1.5	1.6	1.7	1.8	1.6	1.7	1.7	1.6	
		Category B	2.0	2.0	1.6	1.8	1.9	2.1	1.9	1.9	1.9	1.9	
		Category C	2.8	2.6	2.1	2.6	2.5	2.4	2.3	2.4	1.9	2.1	
	Total points of environment standards ⑬		29	29	29	29	29	29	29	29	29	29	
	Environment standards point to satisfy standard level ⑭		20	26	26	27	26	21	27	23	27	27	
	⑭／⑬（%）		69	90	90	93	90	72	93	79	93	93	

Source: "Measurement Results of Water Quality in Public Waters FY2015," Ministry of the Environment

5.07 Changes in Water quality in the specified lakes (COD)

(Unit: mg / L)

		Category	Number of points	FY 2006	2007	2008	2009	2010	2011	2012	2013	2014	2015
Kamafusa Dam		A A	1	2.6	2.2	2.3	2.5	2.6	2.5	2.4	2.5	2.9	2.7
				2.1	2.0	2.1	2.3	2.5	2.4	2.2	2.4	2.7	2.8
Hachirogata Regulating Pond		A	3	12.0	9.5	10.0	8.8	9.7	10.0	12.0	9.4	9.8	11.0
				8.8	7.5	6.8	6.8	7.5	7.2	8.5	6.3	7.0	7.9
Kasumigaura Lake	(Nishiura)	A	4	9.3	9.7	9.8	10.0	10.0	9.0	8.3	7.5	7.9	8.6
				8.2	8.5	8.4	9.3	8.2	8.1	7.5	6.6	6.6	7.8
	(Lake Kitaura)	A	2	9.4	9.8	10.0	11.0	12.0	9.1	9.2	8.5	9.6	10.0
				8.4	9.5	9.3	10.0	9.1	8.0	8.3	7.3	7.5	8.9
	(Hitachitonegawa)	A	2	8.9	9.6	9.7	9.7	10.0	9.2	8.3	7.2	7.4	9.0
				8.1	8.8	8.7	9.3	9.2	8.5	8.0	6.7	7.3	8.3
Lake Inba-numa		A	1	10.0	12.0	9.6	9.8	10.0	13.0	12.0	14.0	11.0	14.0
				8.6	11.0	8.5	8.6	8.9	11.0	11.0	12.0	11.0	11.0
Lake Teganuma		B	1	9.6	9.7	9.1	10.0	9.6	10.0	11.0	10.0	8.4	9.3
				7.9	8.4	8.2	8.6	8.9	9.3	9.6	9.5	7.6	8.1
Lake Suwa		A	3	7.4	6.2	6.8	6.0	6.7	4.9	6.7	7.5	7.5	6.4
				5.5	5.1	5.3	4.8	4.5	4.0	4.9	5.9	5.0	4.7
Lake Nojiri		A A	2	1.8	2.0	2.3	2.4	2.2	2.2	2.3	2.4	2.3	2.2
				1.6	1.6	1.9	2.1	1.9	1.9	2.0	2.0	2.1	1.9
Lake Biwa	(North lake)	A A	4	2.5	2.9	3.0	3.0	2.9	2.8	2.8	2.6	2.9	2.8
				2.4	2.6	2.7	2.7	2.6	2.5	2.6	2.4	2.4	2.5
	(South lake)	A A	4	3.7	4.3	4.3	4.7	5.0	4.5	5.3	4.4	4.3	4.6
				2.9	3.4	3.5	3.5	3.7	3.3	3.7	3.1	3.1	3.2
Lake Nakaumi		A	12	5.9	5.6	6.0	5.9	5.3	5.4	5.4	5.6	5.0	5.2
				4.5	4.5	4.4	4.1	3.8	3.4	3.6	4.0	3.4	3.7
Lake Shinji		A	5	4.8	6.2	6.1	5.5	5.9	6.1	6.5	5.7	4.9	4.7
				4.3	5.4	5.4	4.8	5.1	5.1	5.3	4.9	4.1	4.3
Lake Kojima		B	2	8.0	7.9	8.1	7.5	8.0	7.8	7.7	7.4	7.6	7.2
				7.4	7.0	7.3	7.1	7.6	7.6	6.9	6.7	7.3	7.0
Overall average of designated lakes			46	5.5	6.0	5.8	5.9	6.0	5.9	6.0	5.7	5.5	5.9

Note:

・Upper rows indicate 75% of the Environmental Quality Standards values for COD. Lower rows for the annual average of the same.

・75% values for COD refer to the highest among that in each point. The annual COD average values are taken from the average values of all measuring points.

・Value for the whole of a specified lakes is calculated from the mean value of each lake by averaging them. (Hachirogata Regulating Pond was excluded until FY2007. It was included in FY 2008.)

・Hachirogata Regulating Pond was designated as a specified lake in December 2007.

・The number of points describe the number of measuring points of the Environmental Quality Standards in each lakes of FY2015.

Source: "Measurement Results of Water Quality in Public Waters FY2015," Ministry of the Environment

5.08 Achievement rate of Environmental Quality Standards for total nitrogen and total phosphorus in marine water

	Total Nitrogen			Total Phosphorus			Total Nitrogen, Total Phosphorus		
	Number of type-designated water areas	Number of achievement water areas	Achievement rate (%)	Number of type-designated water areas	Number of achievement water areas	Achievement rate (%)	Number of type-designated water areas	Number of achievement water areas	Achievement rate (%)
FY1995	9	2	22.2	9	4	44.4	9	2	22.2
1996	29	20	69.0	29	16	55.2	29	16	55.2
1997	49	33	67.3	49	32	65.3	49	27	55.1
1998	112	83	74.1	112	94	83.9	112	79	70.5
1999	124	96	77.4	124	107	86.3	124	90	72.6
2000	132	102	77.3	132	112	84.8	132	94	71.2
2001	145	128	88.3	145	127	87.6	145	119	82.1
2002	152	134	88.2	152	134	88.2	152	122	80.3
2003	152	135	88.8	152	135	88.8	152	128	84.2
2004	152	126	82.9	152	134	88.2	152	119	78.3
2005	152	131	86.2	152	134	88.2	152	125	82.2
2006	152	133	87.5	152	132	86.8	152	122	80.3
2007	152	141	92.8	152	133	87.5	152	125	82.2
2008	152	140	92.1	152	136	89.5	152	129	84.9
2009	151	143	94.7	151	128	84.8	151	123	81.5
2010	152	137	90.1	152	133	87.5	152	124	81.6
2011	151	142	94.0	151	132	87.4	151	128	84.8
2012	149	132	88.6	149	131	87.9	149	125	83.9
2013	149	141	94.6	149	137	91.9	149	132	88.6
2014	151	145	96.0	151	139	92.1	151	135	89.4
2015	151	145	96.0	151	134	88.7	151	131	86.8

Notes:
- Only when both Total Nitrogen and Total Phosphorus satisfy the Environmental Quality Standards (EQS.), an area is considered as achievement water area.
- No sea area is subjected to EQS for only Total Nitrogen nor for only Total Phosphorus.
- Survey on total Nitrogen and total Phosphorus in Sea area began in 1995.

Source: "Measurement Results of Water Quality in Public Waters FY2015," Ministry of the Environment

5.09 Achievement of Environment Standards for Total Nitrogen and Total Phosphorus in Lakes

	Total Nitrogen			Total Phosphorus			Total Nitrogen, Total Phosphorus		
	Number of type-designated water areas	Number of water areas achieving the standard	Achievement rate (%)	Number of type-designated water areas	Number of water areas achieving the standard	Achievement rate (%)	Number of type-designated water areas	Number of water areas achieving the standard	Achievement rate (%)
FY1984	3	0	0.0	3	0	0.0	3	0	0.0
1985	7	1	14.3	17	9	52.9	17	8	47.1
1986	15	2	13.3	31	17	54.8	31	15	48.4
1987	17	2	11.8	37	16	43.2	37	15	40.5
1988	21	1	4.8	42	16	38.1	42	13	31.0
1989	22	3	13.6	45	17	37.8	45	16	35.6
1990	22	3	13.6	47	24	51.1	47	20	42.6
1991	22	1	4.5	48	17	35.4	48	14	29.2
1992	22	1	4.5	48	23	47.9	48	18	37.5
1993	22	1	4.5	48	19	39.6	48	15	31.3
1994	23	1	4.3	49	23	46.9	49	20	40.8
1995	23	1	4.3	50	24	48.0	50	18	36.0
1996	24	3	12.5	51	27	52.9	51	24	47.1
1997	25	3	12.0	54	25	46.3	54	23	42.6
1998	27	3	11.1	60	25	41.7	60	23	38.3
1999	27	2	7.4	64	30	46.9	64	27	42.2
2000	28	2	7.1	67	31	46.3	67	27	40.3
2001	32	2	6.3	79	35	44.3	79	30	38.0
2002	32	3	9.4	81	34	42.0	81	28	34.6
2003	32	2	6.3	93	47	50.5	93	40	43.0
2004	35	3	8.6	98	50	51.0	98	43	43.9
2005	35	4	11.4	103	54	52.4	103	48	46.6
2006	35	3	8.6	109	57	52.3	109	50	45.9
2007	35	4	11.4	110	57	51.8	110	51	46.4
2008	37	3	8.1	112	64	57.1	112	56	50.0
2009	39	6	15.4	115	67	58.3	115	60	52.2
2010	38	5	13.2	117	62	53.0	117	59	50.4
2011	39	5	12.8	119	61	51.3	119	57	47.9
2012	39	5	12.8	119	65	54.6	119	61	51.3
2013	39	5	12.8	119	62	52.1	119	60	50.4
2014	39	6	15.4	121	64	52.9	121	61	50.4
2015	39	5	12.8	121	66	54.5	121	62	51.2

Notes:

・In "Total Nitrogen" column, "water areas achieving the standard" is water areas where the standards for Total Nitrogen is achieved.

・In "Total Phosphorus" column, "water areas achieving the standard" is water areas where the standards for Total Phosphorus are achieved.
・In regard to achievement of environment standards for Total Nitrogen and Total Phosphorus,
1) For the water areas subject to environment standards both for Total Nitrogen and Total Phosphorus, they are classified as water area achieving the standard only when both Total Nitrogen and Total Phosphorus fulfill the environment standards.
2) For the water areas subject to environment standard for Total Phosphorus only, they are classified as water area achieving the standard only when Total Phosphorus fulfills the environment standards.
・Survey on Total Nitrogen and Total Phosphorus in Lake began in 1984.

Source: "Measurement Results of Water Quality in Public Waters FY2015," Ministry of the Environment

5.10 Generation Loads and Reduction Targets for 3 Sea Areas with Area-wide Total Pollutant Controls by Source

① Generation load and reduction target for COD for 3 seas areas with Area-wide Total Pollutant Controls by Source (Unit: t / day)

		Actual								Reduction Target
		FY1979	1984	1989	1994	1999	2004	2009	2014	FY2019
Tokyo Bay	Domestic Wastewater	324	290	243	197	167	144	124	110	103
	Industrial Wastewater	115	83	76	59	52	42	36	34	33
	Others	38	40	36	30	28	25	23	19	19
	Sub Total	477	413	355	286	247	211	183	163	155
Ise Bay	Domestic Wastewater	151	150	141	134	118	99	81	69	63
	Industrial Wastewater	119	101	97	83	76	65	57	54	52
	Others	37	35	34	29	27	22	20	18	18
	Sub Total	307	286	272	246	221	186	158	141	133
Seto Inland Sea	Domestic Wastewater	488	444	400	365	319	261	221	180	163
	Industrial Wastewater	429	367	356	309	286	245	193	173	190
	Others	95	89	82	72	67	55	54	51	51
	Sub Total	1,012	900	838	746	672	561	468	404	404
Total	Domestic Wastewater	963	884	784	696	604	504	426	359	329
	Industrial Wastewater	663	551	529	451	414	352	286	261	275
	Others	170	164	152	131	122	102	97	88	88
	Total	1,796	1,599	1,465	1,278	1,140	958	809	708	692

Notes:
- Reduction target volume during FY2019 was formulated at the eighth series of total pollutant load control.
- The target years for load reduction are as follows; The first series: FY 1984, the second: FY1989, the third: FY1994, the forth: FY1999, the fifth: FY2004, the sixth: FY 2009, the seventh: FY2014 and the eighth: FY2019.

Source: Materials by Ministry of the Environment

② Generation load and reduction target for Nitrogen Content for 3 seas areas with Area-wide Total Pollutant Controls by Source

		Actual								Reduction Target
		FY1979	1984	1989	1994	1999	2004	2009	2014	FY2019
Tokyo Bay	Domestic Wastewater	201	187	183	175	164	136	122	111	108
	Industrial Wastewater	96	82	72	50	41	29	26	25	24
	Others	67	64	64	55	49	43	37	34	34
	Sub Total	364	333	319	280	254	208	185	170	166
Ise Bay	Domestic Wastewater	69	73	64	64	60	52	47	42	40
	Industrial Wastewater	52	49	42	39	29	26	22	21	21
	Others	66	63	62	58	54	51	49	47	47
	Sub Total	188	185	168	161	143	129	118	110	108
Seto Inland Sea	Domestic Wastewater	189	188	201	205	184	159	143	125	123
	Industrial Wastewater	249	225	223	259	191	117	95	87	100
	Others	228	226	232	233	221	200	195	178	179
	Sub Total	666	639	656	697	596	476	433	390	402
Total	Domestic Wastewater	459	448	448	444	408	347	312	278	271
	Industrial Wastewater	397	356	337	348	261	172	143	133	145
	Others	361	353	358	346	324	294	281	259	260
	Sub Total	1,218	1,157	1,143	1,138	993	813	736	670	676

Notes:
- The pollutant load reduction target volume during FY2019 was formulated at the eighth series of total pollutant load control.
- Reduction of nitrogen content was implemented from the fifth series. The target years of the fifth, sixth, seventh, and eighth series are 2004, 2009, 2014, and 2019 respectively.
- Actual figures in 1994 or before are aggregated data of the prefectures involved.

Source: Materials by Ministry of the Environment

③Transition of pollutant load generation in the total pollutant load control areas and the pollutant load reduction target for phosphorus

		Actual								Reduction Target
		FY1979	1984	1989	1994	1999	2004	2009	2014	FY2019
Tokyo Bay	Domestic Wastewater	24.9	17.6	15.1	14.2	13.5	10.4	9.0	8.8	8.3
	Industrial Wastewater	9.5	6.4	5.2	4.3	3.5	1.8	1.4	1.4	1.5
	Others	6.8	6.2	5.6	4.5	4.1	3.1	2.5	2.1	1.9
	Sub Total	41.2	30.2	25.9	23.0	21.1	15.3	12.9	12.3	11.7
Ise Bay	Domestic Wastewater	9.8	6.7	6.3	6.4	6.5	5.1	4.3	3.7	3.4
	Industrial Wastewater	7.0	6.5	5.3	4.8	4.1	2.9	2.5	2.3	2.1
	Others	7.6	7.2	7.2	6.1	4.6	2.8	2.2	2.2	2.3
	Sub Total	24.4	20.4	18.8	17.3	15.2	10.8	9.0	8.2	7.8
Seto Inland Sea	Domestic Wastewater	29.6	19.1	16.6	16.8	16.0	12.4	11.4	10.2	10.0
	Industrial Wastewater	20.4	16.2	14.2	13.3	13.2	8.0	6.5	5.7	6.3
	Others	12.9	11.7	11.9	11.0	11.2	10.2	10.1	8.7	8.9
	Sub Total	62.9	47.0	42.7	41.1	40.4	30.6	28.0	24.6	25.2
Total	Domestic Wastewater	64.3	43.4	38.0	37.4	36.0	27.9	24.7	22.7	21.7
	Industrial Wastewater	36.9	29.1	24.7	22.4	20.8	12.7	10.4	9.4	9.9
	Others	27.3	25.1	24.7	21.6	19.9	16.1	14.8	13.0	13.1
	Sub Total	128.5	97.6	87.4	81.4	76.7	56.7	49.9	45.1	44.7

Notes:
- The pollutant load reduction target volume during FY2019 was formulated at the eighth series of total pollutant load control.
- Reduction of phosphorus content was implemented from the fifth series. The target years of the fifth, sixth, seventh, and eighth series are 2004, 2009, 2014, and 2019 respectively.
- Actual figures in 1994 or before are aggregated data of the prefectures involved.

Source: Materials by Ministry of the Environment

5.11 Number of occurrences of Red Tides in Seto Inland Sea

	Number of confirmed cases of occurrence	Number of confirmed cases causing fishery damage
1971	136	39
1972	164	23
1973	210	18
1974	269	17
1975	255	29
1976	299	18
1977	196	27
1978	151	15
1979	172	17
1980	188	8
1981	171	8
1982	166	18
1983	165	13
1984	130	5
1985	170	8
1986	162	14
1987	107	12
1988	117	10
1989	124	6
1990	108	7
1991	107	5
1992	100	6
1993	105	6
1994	96	2
1995	90	10
1996	89	12
1997	135	11
1998	105	11
1999	112	7
2000	106	10
2001	97	7
2002	89	8
2003	106	8
2004	118	13
2005	115	7
2006	94	11
2007	99	9
2008	116	19
2009	104	7
2010	91	9
2011	89	11
2012	116	18
2013	83	9
2014	97	13
2015	80	16

Source: "Red tides in Seto Inland Sea," Ministry of Agriculture, Forestry and Fisheries

5.12 Licensed landfill area of Seto inland sea

	Area (ha)
FY1965	2,197.2
1966	479.9
1967	1,230.0
1968	1,010.3
1969	3,595.2
1970	1,464.9
1971～1973	6,391.5
1974	390.3
1975	546.9
1976	266.1
1977	1,040.5
1978	991.3
1979	271.6
1980	534.1
1981	300.9
1982	110.7
1983	427.9
1984	206.9
1985	198.2
1986	266.8
1987	1,691.5
1988	399.9
1989	379.3
1990	265.2
1991	173.7
1992	147.8
1993	244.3
1994	462.0
1995	565.7
1996	315.7
1997	462.3
1998	465.3
1999	1,016.0
2000	146.3
2001	398.2
2002	35.2
2003	49.5
2004	43.9
2005	76.5
2006	17.8
2007	37.6
2008	94.4
2009	14.9
2010	33.4
2011	18.4
2012	1.8
2013	68.4
2014	38.0
2015	1.1
2016	61.8

Notes:

・From 1965 through 1970, a cumulative total from 1st January to 31th December is shown. After 1974, that from 2nd November in the previous year to 1st November is shown.

・Figure for "1971 ~ 1973" is a cumulative total from 1st January 1971 to 1st November 1973.

Source: Materials by Ministry of the Environment

5.13 Amount of sea gravel extracted in coastal prefectures in Seto Inland Sea

	Amount of sea gravel extracted (thousand/㎥)
FY1968	6,052
1969	12,745
1970	21,966
1971	17,750
1972	17,301
1973	22,829
1974	21,975
1975	21,245
1976	20,187
1977	23,379
1978	28,384
1979	30,017
1980	29,314
1981	26,463
1982	25,828
1983	25,021
1984	23,274
1985	24,093
1986	24,356
1987	29,719
1988	27,056
1989	25,512
1990	25,491
1991	24,254
1992	24,904
1993	23,179
1994	23,958
1995	25,152
1996	23,913
1997	20,396
1998	19,904
1999	19,282
2000	17,397
2001	14,938
2002	13,123
2003	9,881
2004	9,435
2005	7,072
2006	4,628
2007	5,160
2008	4,931
2009	4,309
2010	3,687
2011	3,420
2012	3,640
2013	4,302
2014	4,311
2015	3,846

Note:
Including amount of sea gravel extracted outside the scope of Law concerning Special Measures for Conservation of the Environment of the Seto Inland Sea.

Source: "Schedules of status report of gravel extraction work," Ministry of Economy, Trade and Industry; Ministry of Land, Infrastructure, Transport and Tourism

5.14 Groundwater contamination - Yearly number of confirmed cases where contamination level exceeds the standards

("Year" is the fiscal year when cases were identified by the authority)

	Total		Number of confirmed contamination incidents							
			VOC		Heavy Metals		Nitric acid/nitrous acid		Complex contamination	
～FY1983	76	(32)	63	(23)	9	(6)	2	(1)	2	(2)
1984	55	(24)	50	(22)	4	(2)	0	(0)	1	(0)
1985	75	(32)	75	(32)	0	(0)	0	(0)	0	(0)
1986	46	(20)	46	(20)	0	(0)	0	(0)	0	(0)
1987	60	(27)	54	(25)	2	(0)	2	(2)	2	(0)
1988	98	(45)	94	(43)	0	(0)	2	(0)	2	(2)
1989	236	(123)	215	(108)	16	(13)	2	(0)	3	(2)
1990	210	(99)	181	(82)	21	(12)	5	(3)	3	(2)
1991	146	(67)	122	(57)	18	(7)	5	(2)	1	(1)
1992	115	(54)	91	(41)	15	(8)	4	(4)	5	(1)
1993	143	(61)	62	(33)	55	(20)	24	(6)	2	(2)
1994	148	(83)	63	(34)	56	(36)	29	(13)	0	(0)
1995	165	(75)	62	(27)	44	(25)	59	(23)	0	(0)
1996	163	(88)	53	(24)	55	(35)	55	(29)	0	(0)
1997	184	(93)	42	(22)	56	(28)	82	(40)	4	(3)
1998	284	(163)	136	(91)	41	(23)	102	(47)	5	(2)
1999	345	(220)	93	(57)	72	(39)	176	(123)	4	(1)
2000	427	(307)	87	(52)	106	(75)	224	(172)	10	(8)
2001	385	(277)	68	(39)	78	(60)	230	(172)	9	(6)
2002	388	(273)	64	(35)	79	(51)	239	(182)	6	(5)
2003	455	(312)	74	(46)	86	(54)	287	(206)	8	(6)
2004	411	(284)	90	(45)	107	(73)	205	(160)	9	(6)
2005	369	(237)	100	(49)	114	(77)	146	(107)	9	(4)
2006	359	(259)	94	(44)	108	(82)	139	(120)	18	(13)
2007	348	(258)	81	(38)	120	(97)	140	(118)	7	(5)
2008	313	(239)	50	(28)	118	(93)	133	(110)	12	(8)
2009	294	(232)	62	(36)	97	(75)	129	(116)	6	(5)
2010	271	(231)	39	(24)	97	(82)	130	(120)	5	(5)
2011	253	(218)	45	(34)	96	(79)	106	(101)	6	(4)
2012	236	(220)	35	(30)	109	(103)	88	(83)	4	(4)
2013	286	(277)	54	(50)	115	(110)	115	(115)	2	(2)
2014	250	(244)	44	(40)	106	(105)	99	(98)	1	(1)
2015	207	(206)	25	(25)	87	(86)	94	(94)	1	(1)
Parameter	7,801	(5,380)	2,514	(1,356)	2,087	(1,556)	3,053	(2,367)	147	(101)

Note:
Parenthesized figures are the total number of cases of exceeding the standards" and cases of temporarily exceeding" as of the end of FY2015.

Source: "Test result of groundwater quality measurement in FY2015," Ministry of the Environment

5.15 Itemized breakdown of groundwater contamination cases

(As of the end of fiscal year 2015)

Item category	Item name	Number of cases					
			Excess cases		Temporary achievement cases	Improvement case	Non-survey case
			Cases that exceeds	Cases that does not exceed currently (Note 2)			
VOC	Dichloromethane	59	14	15	11	18	1
	Carbon tetrachloride	109	29	25	11	42	2
	Vinyl chloride monomer	201	120	30	30	16	5
	1,2-dichloroethane	83	24	23	8	23	5
	1,1-dichloroethylene	267	27	120	33	78	9
	1,2-dichloroethylene	356	162	84	61	35	14
	1,1,1-trichloroethane	125	8	29	19	60	9
	1,1,2-trichloroethane	39	12	11	5	11	0
	Trichloroethylene	1,228	435	140	183	370	100
	Tetrachloroethylene	1,428	515	78	242	448	145
	1,3-dichloropropene	0	0	0	0	0	0
	Benzene	303	90	13	31	154	15
	1,4-diozane	17	15	2	0	0	0
Heavy metals	Cadmium	20	10	1	3	6	0
	Total cyanide	49	25	6	6	11	1
	Lead	310	80	27	51	119	33
	Hexavalent chromium	76	33	4	18	19	2
	Arsenic	1258	855	17	125	137	124
	Total mercury	127	49	7	15	38	18
	Alkyl mercury	3	2	1	0	0	0
	PCB	10	4	1	0	4	1
	Thiuram	0	0	0	0	0	0
	Simazine	0	0	0	0	0	0
	Thiobencarb	0	0	0	0	0	0
	Selenium	23	16	2	0	3	2
	Fluorine	522	342	17	67	48	48
	Boron	210	135	12	22	20	21
Nitrate nitrogen and nitrite nitrogen		3,053	1,775	0	592	484	202
Parameter		7,801		4,096	1,284	1,777	644

Notes:

1) Contamination may happen in multiple items in one case, and the total may not foot the parameter.

2) "Item that does not exceed currently" refers to the case where contamination happed multiple times in the past and currently EQS is satisfied as to the indicated item but as to other items EQS is not satisfied.

Source: "Results of the FY 2015 Water Quality Survey of underground water," Ministry of the Environment

5.16 Results of groundwater quality survey (1)

Researched groups	Research-ed items	General monitoring survey			Survey of contaminated wells and vicinities		Continuance surveillance or Regular monitoring survey		Remarks	
		Number of survey	Exceeding number	Exceeding rate (%)	Number of survey	Exceeding number	Number of survey	Exceeding rate	Standard type	Standard value
Cadmium	1997	2,094	0	0.0	41	0	748	0	Environmental standards	0.01mg/L or less
	1998	3,102	0	0.0	50	0	340	0		
	1999	3,152	1	0.0	30	0	333	0		
	2000	2,997	0	0.0	35	0	252	0		
	2001	3,003	0	0.0	45	0	237	0		
	2002	3,242	0	0.0	25	0	298	0		
	2003	3,591	0	0.0	31	0	308	0		
	2004	3,247	0	0.0	73	0	246	0		
	2005	3,092	0	0.0	56	0	216	0		
	2006	3,166	0	0.0	27	0	117	0		
	2007	3,160	0	0.0	56	0	154	0		
	2008	2,871	0	0.0	48	0	230	0		
	2009	3,185	0	0.0	24	0	79	0		
	2010	2,996	0	0.0	52	0	54	0		
	2011	2,910	2	0.1	76	0	31	1		0.003mg/L or less
	2012	2,899	0	0.0	24	0	49	2		
	2013	2,904	0	0.0	24	0	44	2		
	2014	2,704	0	0.0	20	0	43	1		
	2015	2,658	1	0.0	45	0	46	1		
Total cyanide	1997	1,909	0	0.0	45	0	715	0	Environmental standards	Should not be detected
	1998	2,659	0	0.0	42	0	282	0		
	1999	2,786	0	0.0	25	0	297	0		
	2000	2,616	0	0.0	26	0	230	0		
	2001	2,660	0	0.0	47	0	225	0		
	2002	2,639	0	0.0	28	2	284	0		
	2003	2,870	0	0.0	50	2	300	0		
	2004	2,723	0	0.0	46	0	236	0		
	2005	2,830	0	0.0	28	0	218	1		
	2006	2,904	0	0.0	40	0	120	1		
	2007	2,737	0	0.0	44	0	155	0		
	2008	2,508	0	0.0	40	0	234	0		
	2009	2,904	0	0.0	21	0	101	0		
	2010	2,774	0	0.0	36	0	73	0		
	2011	2,713	0	0.0	30	0	54	0		
	2012	2,642	0	0.0	27	0	60	1		
	2013	2,736	0	0.0	26	0	55	0		
	2014	2,534	0	0.0	22	0	58	0		
	2015	2,479	0	0.0	32	0	62	0		
Lead	1997	2,456	8	0.3	71	6	771	8	Environmental standards	0.01mg/L or less
	1998	3,312	8	0.2	90	1	374	5		
	1999	3,198	15	0.5	84	0	374	7		
	2000	3,360	10	0.3	82	3	298	13		
	2001	3,362	13	0.4	110	4	275	6		
	2002	3,484	8	0.2	149	7	346	8		
	2003	3,689	21	0.6	164	6	349	7		
	2004	3,566	14	0.4	145	2	344	11		
	2005	3,374	15	0.4	162	6	306	10		
	2006	3,484	8	0.2	130	2	220	10		
	2007	3,466	12	0.3	296	4	283	8		
	2008	3,193	10	0.3	232	7	360	10		
	2009	3,219	11	0.3	115	1	189	9		
	2010	3,041	12	0.4	426	14	173	9		
	2011	2,975	13	0.4	282	4	149	16		
	2012	2,962	12	0.4	138	2	178	15		
	2013	2,964	9	0.3	215	4	205	13		
	2014	2,755	7	0.3	66	2	197	13		
	2015	2,712	3	0.1	101	2	201	17		
Hexavalent chromium	1997	2,290	1	0.0	45	0	781	12	Environmental standards	0.05mg/L or less
	1998	3,232	0	0.0	60	0	403	11		
	1999	3,129	0	0.0	25	0	376	11		
	2000	3,187	1	0.0	49	2	285	9		
	2001	3,175	0	0.0	38	2	264	11		
	2002	3,308	0	0.0	25	0	325	11		
	2003	3,562	1	0.0	60	1	334	10		
	2004	3,420	0	0.0	49	0	291	15		
	2005	3,286	0	0.0	58	0	267	14		
	2006	3,387	0	0.0	58	1	173	15		
	2007	3,388	1	0.0	74	0	208	15		
	2008	3,116	0	0.0	68	1	294	15		
	2009	3,189	0	0.0	48	27	140	14		
	2010	3,015	0	0.0	43	0	124	21		
	2011	2,882	0	0.0	33	0	117	22		
	2012	2,849	0	0.0	50	0	129	20		
	2013	2,869	0	0.0	43	0	139	23		
	2014	2,662	0	0.0	58	0	139	22		
	2015	2,625	2	0.1	57	2	140	26		
Arsenic	1997	2,564	52	2.0	264	53	1,059	192	Environmental standards	0.01mg/L or less
	1998	3,424	45	1.3	275	32	688	234		
	1999	3,310	45	1.4	186	29	695	223		
	2000	3,386	65	1.9	380	83	613	238		
	2001	3,422	44	1.3	284	108	626	246		
	2002	3,520	53	1.5	255	49	720	261		
	2003	3,760	54	1.4	217	32	727	270		
	2004	3,666	74	2.0	441	138	727	285		
	2005	3,457	61	1.8	411	100	834	293		
	2006	3,663	78	2.1	318	66	786	301		
	2007	3,591	73	2.0	326	71	693	305		
	2008	3,239	77	2.4	394	107	826	315		
	2009	3,338	63	1.9	236	43	568	292		
	2010	3,088	66	2.1	589	78	580	300		
	2011	3,038	57	1.9	440	85	582	308		
	2012	3,017	68	2.3	331	67	600	313		
	2013	3,020	63	2.1	383	47	647	332		
	2014	2,816	69	2.5	301	29	644	361		
	2015	2,764	60	2.2	247	38	640	352		

5.16 Results of groundwater quality survey (2)

Researched groups	Research-ed items	General monitoring survey			Survey of contaminated wells and vicinities		Continuance surveillance or Regular monitoring survey		Remarks	
		Number of survey	Exceeding number	Exceeding rate (%)	Number of survey	Exceeding number	Number of survey	Exceeding rate	Standard type	Standard value
Total mercury	1989	1,547	0	0	0	0	51	0	Environmental standards	0.0005mg/L or less
	1990	3,229	4	0.1	66	5	287	0		
	1991	2,978	3	0.1	92	9	504	11		
	1992	2,781	3	0.1	67	4	622	14		
	1993	2,626	3	0.1	129	10	657	15		
	1994	2,203	0	0.0	60	0	726	17		
	1995	2,145	2	0.1	76	3	715	11		
	1996	2,082	1	0.0	329	31	746	16		
	1997	2,102	1	0.0	53	0	809	15		
	1998	2,961	1	0.0	68	5	413	15		
	1999	3,084	0	0.0	55	2	383	16		
	2000	2,833	2	0.1	43	2	302	16		
	2001	2,907	3	0.1	270	34	300	18		
	2002	3,253	0	0.0	44	0	351	15		
	2003	3,318	1	0.0	60	0	353	9		
	2004	3,235	5	0.2	63	4	289	12		
	2005	3,120	3	0.1	108	6	256	14		
	2006	3,234	3	0.1	35	3	157	14		
	2007	3,233	5	0.2	73	8	197	13		
	2008	2,944	2	0.1	71	5	275	25		
	2009	3,154	2	0.1	39	4	145	23		
	2010	2,999	0	0.0	45	2	119	24		
	2011	2,908	0	0.0	75	3	107	21		
	2012	2,886	1	0.0	46	5	117	19		
	2013	2,900	1	0.0	68	4	113	20		
	2014	2,701	1	0.0	51	6	104	24		
	2015	2,660	0	0.0	44	3	103	20		
Alkyl mercury	1997	748	0	0.0	38	0	513	0	Environmental standards	Should not be detected
	1998	1,315	0	0.0	21	0	121	0		
	1999	1,278	0	0.0	37	0	85	0		
	2000	1,048	0	0.0	26	0	57	0		
	2001	1,075	0	0.0	43	0	61	0		
	2002	1,020	0	0.0	25	0	108	0		
	2003	931	0	0.0	24	0	106	0		
	2004	993	0	0.0	33	0	52	0		
	2005	1,008	0	0.0	77	0	34	0		
	2006	762	0	0.0	21	0	38	0		
	2007	683	0	0.0	22	0	50	0		
	2008	545	0	0.0	22	0	53	0		
	2009	523	0	0.0	30	0	43	0		
	2010	500	0	0.0	35	0	38	0		
	2011	692	0	0.0	22	0	38	0		
	2012	450	0	0.0	26	0	41	0		
	2013	642	0	0.0	25	0	44	0		
	2014	526	0	0.0	27	0	40	0		
	2015	699	0	0.0	26	0	23	0		
P C B	1997	1,096	0	0.0	21	0	548	0	Environmental standards	Should not be detected
	1998	1,852	0	0.0	21	0	141	0		
	1999	1,930	0	0.0	25	0	132	0		
	2000	1,818	0	0.0	26	0	113	0		
	2001	2,044	0	0.0	26	0	125	0		
	2002	1,738	0	0.0	25	0	164	0		
	2003	1,816	0	0.0	24	0	148	0		
	2004	1,899	0	0.0	26	0	117	0		
	2005	1,883	0	0.0	30	0	61	0		
	2006	1,830	0	0.0	21	0	53	0		
	2007	1,732	0	0.0	21	0	45	0		
	2008	1,685	0	0.0	48	0	55	0		
	2009	2,082	0	0.0	21	0	30	0		
	2010	2,005	0	0.0	35	0	32	0		
	2011	1,946	0	0.0	23	0	15	0		
	2012	1,969	0	0.0	22	0	20	0		
	2013	2,057	2	0.0	40	0	16	0		
	2014	2,022	0	0.0	23	0	19	2		
	2015	1,957	0	0.0	28	0	18	2		
Trichlorethylene	1997	3,692	5	0.1	617	19	3,912	279	Environmental standards	0.03mg/L or less
	1998	4,492	17	0.4	1,251	34	3,301	242		
	1999	4,455	15	0.3	916	37	3,338	267		
	2000	4,225	22	0.5	846	47	3,054	292		
	2001	4,371	11	0.3	586	14	3,070	301		
	2002	4,414	10	0.2	436	21	2,954	286		
	2003	4,473	16	0.4	457	22	3,001	265		
	2004	4,234	18	0.4	457	19	2,922	243		
	2005	3,968	11	0.3	370	21	2,704	263		
	2006	3,911	6	0.2	346	15	2,490	260		
	2007	3,948	7	0.2	314	13	2,331	231		
	2008	3,658	3	0.1	431	22	2,470	237		
	2009	3,676	2	0.1	411	14	2,220	226		
	2010	3,366	1	0.0	464	15	2,123	215		
	2011	3,285	1	0.0	387	13	2,049	182		
	2012	3,245	2	0.1	468	8	2,021	171		
	2013	3,235	4	0.1	413	9	1,997	157		
	2014	2,965	7	0.2	440	25	1,941	279		0.01mg/L or less
	2015	2,942	2	0.1	292	9	1,897	260		

5.16 Results of groundwater quality survey (3)

Researched groups	Researched items	General monitoring survey			Survey of contaminated wells and vicinities		Continuance surveillance or Regular monitoring survey		Remarks	
		Number of survey	Exceeding number	Exceeding rate (%)	Number of survey	Exceeding number	Number of survey	Exceeding rate	Standard type	Standard value
Tetrachlorethylene	1997	3,692	8	0.2	635	40	3,965	696	Environmental standards	0.01mg/L or less
	1998	4,492	28	0.6	1,255	73	3,362	645		
	1999	4,451	23	0.5	921	49	3,376	589		
	2000	4,225	17	0.4	825	15	3,104	653		
	2001	4,374	10	0.2	620	39	3,072	624		
	2002	4,414	7	0.2	435	31	2,945	595		
	2003	4,472	21	0.5	431	22	2,992	586		
	2004	4,248	22	0.5	477	39	2,950	556		
	2005	3,961	6	0.2	328	39	2,710	559		
	2006	3,922	13	0.3	346	21	2,509	537		
	2007	3,938	12	0.3	323	21	2,327	543		
	2008	3,660	9	0.2	411	24	2,472	520		
	2009	3,679	5	0.1	405	30	2,186	513		
	2010	3,363	4	0.1	453	8	2,083	473		
	2011	3,283	7	0.2	393	18	2,004	448		
	2012	3,242	3	0.1	430	26	1,967	414		
	2013	3,233	7	0.2	390	17	1,945	424		
	2004	2,958	8	0.3	423	18	1,885	417		
	2015	2,936	3	0.1	257	7	1,830	404		
1,1,1-trichloroethane	1997	3,603	0	0.0	612	0	3,636	0	Environmental standards	1mg/L or less
	1998	4,436	1	0.0	1,189	0	3,123	0		
	1999	4,362	0	0.0	879	0	2,987	3		
	2000	4,219	0	0.0	808	0	2,539	2		
	2001	4,290	0	0.0	564	0	2,586	3		
	2002	4,270	0	0.0	377	0	2,379	2		
	2003	4,312	0	0.0	359	0	2,417	2		
	2004	3,990	0	0.0	389	0	2,320	3		
	2005	3,739	0	0.0	207	0	2,123	1		
	2006	3,717	0	0.0	187	0	1,820	0		
	2007	3,635	0	0.0	193	0	1,631	0		
	2008	3,473	0	0.0	172	0	1,608	0		
	2009	3,430	0	0.0	186	0	1,443	0		
	2010	3,222	0	0.0	309	0	1,355	0		
	2011	3,189	0	0.0	239	0	1,212	0		
	2012	3,150	0	0.0	216	0	1,196	0		
	2013	3,136	0	0.0	207	0	1,162	0		
	2014	2,872	0	0.0	225	0	1,109	0		
	2015	2,842	0	0.0	137	0	1,088	0		
Carbon tetrachloride	1997	2,828	2	0.1	253	2	1,843	22	Environmental standards	0.002mg/L or less
	1998	3,631	2	0.1	388	2	1,376	24		
	1999	3,695	3	0.1	372	0	1,413	21		
	2000	3,675	2	0.1	291	3	1,272	24		
	2001	3,700	0	0.0	313	2	1,341	22		
	2002	3,814	3	0.1	232	5	1,323	22		
	2003	3,824	0	0.0	146	0	1,318	22		
	2004	3,661	4	0.1	221	2	1,287	23		
	2005	3,554	3	0.1	106	1	1,017	26		
	2006	3,628	3	0.1	103	4	888	23		
	2007	3,536	0	0.0	96	0	798	25		
	2008	3,379	0	0.0	72	2	799	26		
	2009	3,340	1	0.0	102	1	702	24		
	2010	3,120	1	0.0	193	1	653	29		
	2011	3,036	0	0.0	153	2	567	21		
	2012	3,005	0	0.0	170	3	556	19		
	2013	2,986	1	0.0	182	3	513	16		
	2014	2,740	0	0.0	156	3	532	15		
	2015	2,710	0	0.0	108	3	507	14		
Dichloromethane	1997	2,805	2	0.1	124	0	1,167	0	Environmental standards	0.02mg/L or less
	1998	3,729	1	0.0	349	0	768	0		
	1999	3,740	0	0.0	223	0	770	3		
	2000	3,534	0	0.0	229	0	744	0		
	2001	3,548	1	0.0	280	0	802	0		
	2002	3,635	1	0.0	146	0	835	0		
	2003	3,865	1	0.0	169	1	890	0		
	2004	3,535	0	0.0	141	0	877	0		
	2005	3,381	0	0.0	52	0	730	1		
	2006	3,455	0	0.0	97	1	627	1		
	2007	3,370	0	0.0	88	0	571	0		
	2008	3,276	0	0.0	72	0	557	0		
	2009	3,349	0	0.0	98	0	486	0		
	2010	3,178	0	0.0	141	0	467	0		
	2011	3,121	0	0.0	145	0	398	0		
	2012	3,077	0	0.0	138	0	389	0		
	2013	3,087	0	0.0	106	0	360	0		
	2014	2,823	0	0.0	137	0	382	0		
	2015	2,793	0	0.0	104	0	373	0		
1,2-dichloroethane	1997	2,762	1	0.0	123	0	1,295	2	Environmental standards	0.004mg/L or less
	1998	3,580	0	0.0	328	9	867	5		
	1999	3,687	1	0.0	254	0	1,030	7		
	2000	3,301	0	0.0	296	6	959	6		
	2001	3,316	0	0.0	345	1	1,055	12		
	2002	3,360	2	0.1	155	0	1,094	11		
	2003	3,555	0	0.0	148	0	1,129	9		
	2004	3,267	0	0.0	172	0	1,104	9		
	2005	3,136	0	0.0	55	0	1,102	7		
	2006	3,300	1	0.0	120	1	872	8		
	2007	3,198	0	0.0	112	0	690	10		
	2008	3,120	0	0.0	88	0	650	5		
	2009	3,203	0	0.0	105	0	580	7		
	2010	3,025	0	0.0	177	1	597	4		
	2011	2,984	0	0.0	145	0	535	3		
	2012	2,953	0	0.0	178	0	516	5		
	2013	2,984	0	0.0	122	0	507	2		
	2014	2,985	1	0.0	182	3	513	16		
	2015	2,733	0	0.0	171	0	516	1		

5.16 Results of groundwater quality survey(4)

Researched groups	Research-ed items	General monitoring survey			Survey of contaminated wells and vicinities		Continuance surveillance or Regular monitoring survey		Remarks	
		Number of survey	Exceeding number	Exceeding rate (%)	Number of survey	Exceeding number	Number of survey	Exceeding rate	Standard type	Standard value
1,1-dichloroethylene	1997	2,862	0	0.0	351	3	2,010	24	Environmental standards	0.02mg/L or less
	1998	3,594	2	0.1	905	9	1,685	26		
	1999	3,727	1	0.0	729	3	1,804	35		
	2000	3,650	2	0.1	702	11	1,831	37		
	2001	3,668	0	0.0	535	1	1,964	41		
	2002	3,771	1	0.0	244	0	1,967	40		
	2003	3,846	0	0.0	322	2	2,032	38		
	2004	3,744	2	0.1	404	2	2,077	39		
	2005	3,584	1	0.0	264	4	2,026	46		
	2006	3,651	0	0.0	215	0	1,890	33		
	2007	3,567	0	0.0	225	1	1,843	30		
	2008	3,337	0	0.0	340	0	1,885	31		
	2009	3,306	0	0.0	347	0	1,804	2		
	2010	3,078	0	0.0	468	0	1,764	4		0.1mg/L or less
	2011	3,037	0	0.0	342	0	1,750	3		
	2012	3,001	0	0.0	419	0	1,721	3		
	2013	2,979	0	0.0	378	0	1,689	2		
	2014	2,723	0	0.0	403	1	1,647	2		
	2015	2,695	0	0.0	253	0	1,630	1		
1,1,2-trichloroethane	1997	2,836	0	0.0	123	0	1,264	0	Environmental standards	0.006mg/L or less
	1998	3,574	0	0.0	174	0	854	0		
	1999	3,679	0	0.0	239	0	989	6		
	2000	3,286	0	0.0	278	2	962	6		
	2001	3,308	0	0.0	307	1	1,052	4		
	2002	3,359	0	0.0	146	0	1,084	5		
	2003	3,590	0	0.0	148	0	1,120	3		
	2004	3,259	1	0.0	191	1	1,107	2		
	2005	3,127	0	0.0	74	0	1,014	4		
	2006	3,240	1	0.0	159	2	773	4		
	2007	3,136	1	0.0	118	0	715	9		
	2008	2,987	0	0.0	65	2	659	3		
	2009	3,170	1	0.0	123	0	583	1		
	2010	2,938	0	0.0	175	0	599	1		
	2011	2,878	0	0.0	153	0	522	0		
	2012	2,851	1	0.0	183	0	529	1		
	2013	2,876	0	0.0	121	0	509	0		
	2014	2,630	0	0.0	191	0	535	1		
	2015	2,604	0	0.0	69	0	527	0		
1,3-dichloropropene	1997	2,586	0	0.0	93	0	785	0	Environmental standards	0.002mg/L or less
	1998	3,179	0	0.0	98	0	368	0		
	1999	3,181	0	0.0	178	0	385	0		
	2000	3,039	0	0.0	162	0	372	0		
	2001	2,898	0	0.0	81	0	412	0		
	2002	3,085	0	0.0	95	0	454	0		
	2003	3,082	0	0.0	115	0	509	0		
	2004	3,043	0	0.0	103	0	520	0		
	2005	2,886	0	0.0	41	0	437	0		
	2006	2,940	0	0.0	71	0	347	0		
	2007	2,883	0	0.0	78	0	294	0		
	2008	2,799	0	0.0	46	0	317	0		
	2009	2,922	0	0.0	89	0	261	0		
	2010	2,773	0	0.0	124	0	270	0		
	2011	2,661	0	0.0	93	0	216	0		
	2012	2,646	0	0.0	116	0	220	0		
	2013	2,645	0	0.0	30	0	210	0		
	2014	2,392	0	0.0	137	0	234	0		
	2015	2,364	0	0.0	31	0	231	0		
Thiuram	1997	2,376	0	0.0	16	0	609	0	Environmental standards	0.006mg/L or less
	1998	2,764	0	0.0	8	0	195	0		
	1999	2,490	0	0.0	2	0	186	0		
	2000	2,528	0	0.0	10	0	171	0		
	2001	2,506	0	0.0	2	0	201	0		
	2002	2,494	0	0.0	3	0	258	0		
	2003	2,625	0	0.0	2	0	233	0		
	2004	2,472	0	0.0	4	0	204	0		
	2005	2,322	0	0.0	4	0	222	0		
	2006	2,411	0	0.0	1	0	92	0		
	2007	2,404	0	0.0	0	0	81	0		
	2008	2,330	0	0.0	15	0	90	0		
	2009	2,585	0	0.0	0	0	53	0		
	2010	2,509	0	0.0	14	0	47	0		
	2011	2,432	0	0.0	1	0	32	0		
	2012	2,451	0	0.0	1	0	35	0		
	2013	2,460	0	0.0	2	0	34	0		
	2014	2,263	0	0.0	3	0	33	0		
	2015	2,241	0	0.0	7	0	36	0		
Simazine	1997	2,369	0	0.0	16	0	598	0	Environmental standards	0.003mg/L or less
	1998	2,826	0	0.0	41	0	194	0		
	1999	2,549	0	0.0	2	0	190	0		
	2000	2,508	0	0.0	10	0	174	0		
	2001	2,638	0	0.0	7	0	205	0		
	2002	2,547	0	0.0	3	0	258	0		
	2003	2,614	0	0.0	2	0	233	0		
	2004	2,628	0	0.0	4	0	204	0		
	2005	2,402	0	0.0	4	0	222	0		
	2006	2,478	0	0.0	1	0	92	0		
	2007	2,471	0	0.0	3	0	81	0		
	2008	2,391	0	0.0	15	0	91	0		
	2009	2,643	0	0.0	0	0	52	0		
	2010	2,563	0	0.0	14	0	47	0		
	2011	2,420	0	0.0	1	0	32	0		
	2012	2,448	0	0.0	1	0	34	0		
	2013	2,457	0	0.0	2	0	34	0		
	2014	2,260	0	0.0	3	0	33	0		
	2015	2,238	0	0.0	7	0	36	0		

5.16 Results of groundwater quality survey(5)

Researched groups	Research-ed items	General monitoring survey			Survey of contaminated wells and vicinities		Continuance surveillance or Regular monitoring survey		Remarks	
		Number of survey	Exceeding number	Exceeding rate (%)	Number of survey	Exceeding number	Number of survey	Exceeding rate	Standard type	Standard value
Thiobencarb	1997	2,381	0	0.0	16	0	598	0	Environmental standards	0.02mg/L or less
	1998	2,759	0	0.0	8	0	194	0		
	1999	2,476	0	0.0	2	0	186	0		
	2000	2,453	0	0.0	10	0	171	0		
	2001	2,575	0	0.0	2	0	201	0		
	2002	2,487	0	0.0	3	0	258	0		
	2003	2,573	0	0.0	2	0	233	0		
	2004	2,539	0	0.0	4	0	204	0		
	2005	2,319	0	0.0	4	0	222	0		
	2006	2,409	0	0.0	1	0	92	0		
	2007	2,399	0	0.0	0	0	81	0		
	2008	2,327	0	0.0	15	0	90	0		
	2009	2,583	0	0.0	0	0	52	0		
	2010	2,506	0	0.0	14	0	47	0		
	2011	2,419	0	0.0	1	0	32	0		
	2012	2,448	0	0.0	1	0	34	0		
	2013	2,456	0	0.0	2	0	34	0		
	2014	2,260	0	0.0	3	0	33	0		
	2015	2,238	0	0.0	7	0	36	0		
Benzene	1997	2,695	0	0.0	106	4	815	2	Environmental standards	0.01mg/L or less
	1998	3,536	0	0.0	178	4	451	2		
	1999	3,610	0	0.0	243	2	442	0		
	2000	3,436	0	0.0	211	1	425	1		
	2001	3,324	0	0.0	266	1	496	11		
	2002	3,563	1	0.0	136	1	544	6		
	2003	3,590	0	0.0	118	0	606	4		
	2004	3,524	0	0.0	107	0	604	3		
	2005	3,389	2	0.1	122	1	517	3		
	2006	3,485	0	0.0	96	0	466	3		
	2007	3,396	0	0.0	168	4	410	2		
	2008	3,238	0	0.0	156	0	431	5		
	2009	3,277	0	0.0	139	1	367	4		
	2010	3,106	0	0.0	177	0	353	3		
	2011	3,044	0	0.0	154	0	302	3		
	2012	2,999	0	0.0	158	0	324	3		
	2013	3,010	0	0.0	104	1	293	4		
	2014	2,751	1	0.0	193	0	320	4		
	2015	2,717	0	0.0	59	0	322	4		
Selenium	1997	2,229	0	0.0	46	1	595	1	Environmental standards	0.01mg/L or less
	1998	2,935	0	0.0	41	0	198	0		
	1999	2,758	0	0.0	27	0	192	0		
	2000	2,634	0	0.0	36	0	193	0		
	2001	2,600	0	0.0	24	0	203	0		
	2002	2,650	0	0.0	37	1	272	0		
	2003	2,919	0	0.0	24	0	276	0		
	2004	2,698	1	0.0	32	0	242	0		
	2005	2,599	1	0.0	48	0	218	0		
	2006	2,713	0	0.0	35	0	119	0		
	2007	2,830	0	0.0	46	0	157	0		
	2008	2,624	0	0.0	64	0	208	0		
	2009	2,965	0	0.0	21	0	81	0		
	2010	2,818	0	0.0	49	0	58	0		
	2011	2,738	0	0.0	23	0	47	0		
	2012	2,725	0	0.0	22	0	46	0		
	2013	2,720	0	0.0	24	0	46	0		
	2014	2,533	0	0.0	20	0	48	0		
	2015	2,482	0	0.0	31	0	47	0		
Nitrate nitrogen and nitrite nitrogen	1999	3,374	173	5.1	650	182	807	66	Environmental standards	10mg/L or less
	2000	4,167	253	6.1	1,682	479	988	165		
	2001	4,017	231	5.8	1,343	535	1,113	272		
	2002	4,207	247	5.9	1,199	296	1,324	423		
	2003	4,288	280	6.5	1,101	309	1,504	501		
	2004	4,260	235	5.5	928	283	1,750	637		
	2005	4,122	174	4.2	714	221	1,815	651		
	2006	4,193	179	4.3	789	266	1,732	715		
	2007	4,232	172	4.1	608	128	1,654	729		
	2008	3,830	167	4.4	461	96	1,945	757		
	2009	3,895	149	3.8	500	96	1,713	788		
	2010	3,361	144	4.3	691	160	1,723	813		
	2011	3,227	117	3.6	427	89	1,677	796		
	2012	3,240	117	3.6	401	94	1,625	769		
	2013	3,289	107	3.3	389	60	1,629	760		
	2014	3,084	90	2.9	266	42	1,661	733		
	2015	3,033	105	3.5	352	87	1,642	720		
Fluorine	1999	2,049	24	1.2	147	12	268	9	Environmental standards	0.8mg/L or less
	2000	3,276	25	0.8	658	112	417	19		
	2001	3,558	25	0.7	285	31	839	53		
	2002	4,117	16	0.4	207	31	446	80		
	2003	3,934	27	0.7	218	29	455	83		
	2004	3,542	19	0.5	142	18	441	89		
	2005	3,703	30	0.8	270	47	601	108		
	2006	3,817	32	0.8	190	41	536	103		
	2007	3,890	41	1.1	203	46	376	114		
	2008	3,537	23	0.7	185	10	582	148		
	2009	3,527	17	0.5	155	5	365	138		
	2010	3,088	20	0.6	253	20	380	156		
	2011	3,027	21	0.7	184	14	362	158		
	2012	2,964	18	0.6	142	5	391	151		
	2013	2,983	16	0.5	113	7	417	162		
	2014	2,783	26	0.9	120	12	422	167		
	2015	2,755	16	0.6	129	9	427	175		

5.16 Results of groundwater quality survey(6)

Researched groups	Research-ed items	General monitoring survey			Survey of contaminated wells and vicinities		Continuance surveillance or Regular monitoring survey		Remarks	
		Number of survey	Exceeding number	Exceeding rate (%)	Number of survey	Exceeding number	Number of survey	Exceeding rate	Standard type	Standard value
Boron	1999	1,752	2	0.1	27	0	219	4	Environmental standards	1mg/L or less
	2000	3,210	16	0.5	231	4	314	5		
	2001	3,408	14	0.4	141	20	738	9		
	2002	3,989	5	0.1	217	12	287	15		
	2003	3,819	9	0.2	157	12	297	20		
	2004	3,499	8	0.2	92	1	291	26		
	2005	3,342	5	0.1	145	9	396	32		
	2006	3,396	8	0.2	59	4	301	39		
	2007	3,289	6	0.2	71	1	199	35		
	2008	3,149	9	0.3	62	2	220	39		
	2009	3,068	7	0.2	48	0	203	45		
	2010	2,956	9	0.3	176	11	176	44		
	2011	2,926	7	0.2	101	11	162	41		
	2012	2,868	3	0.1	68	3	176	43		
	2013	2,891	9	0.3	67	6	181	42		
	2014	2,676	7	0.3	50	5	174	43		
	2015	2,635	5	0.2	50	3	179	44		
Vinyl chloride monomer	2009	179	0	0.0	25	0	23	8	Environmental standards	0.002mg/L or less
	2010	2,311	4	0.2	282	5	852	48		
	2011	2,764	7	0.3	295	13	1,189	57		
	2012	2,716	1	0.0	273	14	1,365	83		
	2013	2,679	5	0.2	244	1	1,381	92		
	2014	2,495	2	0.1	357	8	1,374	94		
	2015	2,474	0	0.0	248	1	1,346	91		
1,2-dichloroethylene	2009	138	0	0.0	107	0	97	8	Environmental standards	0.04mg/L or less
	2010	2,935	0	0.0	325	3	1,833	160		
	2011	3,133	3	0.0	321	5	1,846	162		
	2012	3,097	2	0.1	427	13	1,826	154		
	2013	3,043	2	0.1	376	4	1,808	148		
	2014	2,831	0	0.0	388	7	1,758	143		
	2015	2,801	1	0.0	262	1	1,731	137		
1,4-dioxane	2009	226	0	0.0	22	0	0	0	Environmental standards	0.05mg/L or less
	2010	2,456	0	0.0	52	0	116	0		
	2011	2,731	1	0.0	61	1	83	1		
	2012	2,672	1	0.0	26	2	92	2		
	2013	2,701	0	0.0	31	0	102	3		
	2014	2,519	0	0.0	149	2	143	4		
	2015	2,483	2	0.1	53	2	133	4		

Notes

・The exceeding number is the number of wells exceeding the standard measure at the time, and exceeding rate is the ratio of excess following a number of surveys.

The environmental Standards for Water Pollution of groundwater was set in fiscal year 1997, and the standards before 1997 had been evaluation standards or provisional guidelines.

・Environmental standards related to ground water contamination were set in FY 1997. All other standards prior to FY 1997 were considered to be evaluation standards or tentative guidelines.

・Nitrate nitrogen and nitrite nitrogen, fluorine, boron were added to the environmental standards in 1999.

・Starting in FY 2009, Continuance surveillance was changed to Regular monitoring survey in the survey group.

・Nitrate nitrogen and nitrite nitrogen, fluorine, boron were added to the environmental standards in 1999.

Source: "FY 2015 Quality Survey of Underground Water ," Ministry of the Environment

5.17 Changes in number of confirmed marine pollution cases by sea area

(Unit: Case)

Year	Type		Coast of Hokkaido	Eastern coast of Honshu	Tokyo Bay	Ise Bay	Osaka Bay	Seto inland sea (excluding Osaka Bay)	Southern coast of Honshu	Coastal Kyushu	Japan sea coast	Southwestern sea	Total
2009	Oil		66	47	59	19	4	60	30	48	23	13	369
	Non-oil	Hazardous liquid substance	0	0	0	0	0	2	1	0	0	0	3
		Waste	26	16	2	23	3	2	9	7	15	1	104
		Others	8	1	2	0	0	4	0	9	0	0	24
		Subtotal	34	17	4	23	2	8	10	16	15	1	131
	Red tide		0	0	6	4	0	1	0	1	2	0	14
	Total		100	64	69	46	7	69	40	65	40	14	514
2010	Oil		39	46	32	10	10	66	23	24	30	20	300
	Non-oil	Hazardous liquid substance	0	0	0	1	0	4	0	0	1	0	6
		Waste	36	27	0	33	1	4	6	5	12	2	126
		Others	3	3	3	4	0	6	2	2	10	0	33
		Subtotal	39	30	6	38	1	14	8	7	23	2	168
	Red tide		0	0	6	2	0	0	1	3	0	0	12
	Total		78	76	41	50	11	80	32	34	53	22	477
2011	Oil		17	23	37	12	16	56	22	25	27	21	256
	Non-oil	Hazardous liquid substance	0	0	0	2	0	0	0	0	0	1	3
		Waste	22	0	0	21	0	11	8	9	17	3	91
		Others	3	1	1	0	1	4	0	3	12	0	25
		Subtotal	25	1	1	23	1	15	8	12	29	4	119
	Red tide		0	2	5	1	0	1	2	4	1	0	16
	Total		42	26	43	36	17	72	32	41	57	25	391
2012	Oil		12	27	34	18	14	38	18	34	27	22	244
	Non-oil	Hazardous liquid substance	0	2	1	3	2	3	0	0	0	0	11
		Waste	29	16	0	23	2	6	4	3	32	1	116
		Others	3	2	0	3	0	1	0	0	2	0	11
		Subtotal	32	20	1	29	4	10	4	3	34	1	138
	Red tide		0	0	3	6	0	5	2	0	2	0	18
	Total		44	47	38	53	18	53	24	37	63	23	400
2013	Oil		11	30	31	23	16	46	25	30	27	18	257
	Non-oil	Hazardous liquid substance	0	0	1	0	1	0	0	0	1	0	3
		Waste	35	58	1	39	3	6	1	3	41	0	187
		Others	1	3	1	1	0	0	1	1	0	0	8
		Subtotal	36	61	3	40	4	6	2	4	42	0	198
	Total		47	91	34	63	20	52	27	34	69	18	455
2014	Oil		18	24	13	25	18	46	19	35	30	7	235
	Non-oil	Hazardous liquid substance	0	0	0	0	0	1	1	0	1	0	3
		Waste	29	11	1	28	0	9	8	10	30	2	128
		Others	1	2	1	2	0	2	0	2	4	0	14
		Subtotal	30	13	2	30	0	12	9	12	35	2	145
	Total		48	37	15	55	18	58	28	47	65	9	380
2015	Oil		11	17	21	10	19	56	38	26	40	9	247
	Non-oil	Hazardous liquid substance	0	0	0	1	1	3	2	1	0	1	9
		Waste	35	27	1	18	1	13	3	1	13	0	112
		Others	0	1	3	2	0	3	0	7	8	0	24
		Subtotal	35	28	4	21	2	19	5	9	21	1	145
	Total		46	45	25	31	21	75	43	35	61	10	392
2016	Oil		26	47	25	11	19	57	32	43	22	11	293
	Non-oil	Hazardous liquid substance	0	1	3	0	0	2	14	0	1	0	21
		Waste	32	22	0	21	0	12	4	3	17	0	111
		Others	1	2	0	1	0	3	3	1	1	0	12
		Subtotal	33	25	3	22	0	17	21	4	19	0	144
	Total		59	72	28	33	19	74	53	47	41	11	437

Notes:
- "Others" in the "Non-oil" column refer to factory effluent, blue tide and the like.
- Confirmed cases of "Oil" in the "Eastern coast of Honshu" includes the continuous oil spill of 23 cases from “the Chilsong” which was stranded at Hitachi Harbor.

Source: Compiled from "Current situations of Oceanic pollution: January ~ December 2016 " by Japan Coast Guard

5.18 Changes in number of cases of referral by violations against marine environmental laws

Name of Act / Group	Violation	Number detained				
		2012	2013	2014	2015	2016
Prevention of Marine Pollution and Maritime Disaster Act	Violation against prohibiting discharge of oil/hazardous liquids/waste from ships	151	161	142	107	145
	Violation against prohibiting the disposal of disabled ship	118	134	113	109	97
	Other violations	101	141	136	100	130
Waste Management and Public Cleansing Act		135	156	148	192	199
Water Pollution Control Act		5	2	7	13	6
Port Regulations Act		37	57	56	39	41
Other laws		15	10	4	9	6
Total		562	661	606	569	624

Source: Report about crackdown on maritime crime（2016）

5.19 Night soil treatment flow sheet

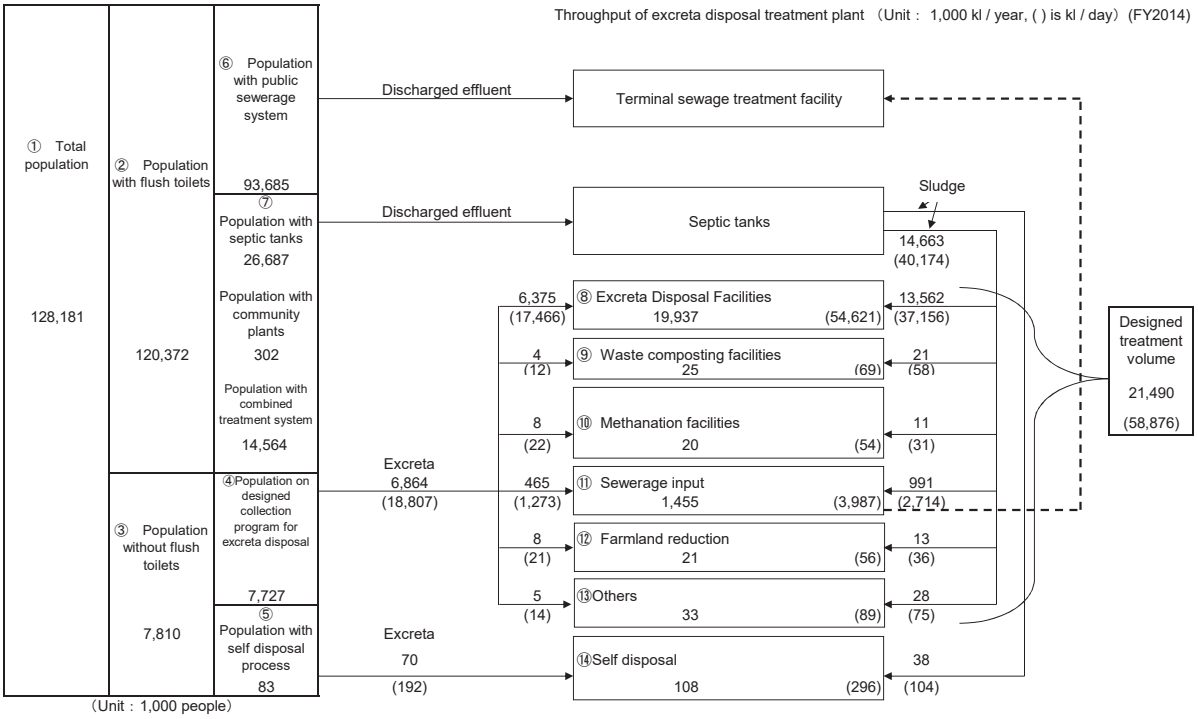

・Rate of flush-toilet use	＝②/①	＝93.9 %
・Use rate of non-flush toilet	＝③/①	＝6.1 %
・Public sewage rate	＝⑥/①	＝73.1 %
・Use rate of flush toilet with a Septic tank (includes community plant) (combined treatment system 11.3%)	＝⑦/①	＝20.8 %
・Designed collection rate in population with non-flush toilets	＝④/③	＝98.9 %
・Self disposal rate in population with non-flush toilets	＝⑤/③	＝1.1 %
・Designed treatment volume (includes septic tanks sludge)	＝⑧＋⑨＋⑩＋⑪＋⑫＋⑬	＝58,876 kl/day ・・・・・・・・・a
・Total amount of treatment (designed treatment volume+self disposal volume)	＝⑧＋⑨＋⑩＋⑪＋⑫＋⑬＋⑭	＝59,172 kl/day ・・・・・・・・・b
・Treatment rate by waste composting facility and sewage input.	＝(⑧＋⑪)÷a	＝99.5 %
・Designed treatment volume of urine per person per day	＝(a－40,070)÷④	＝2.43 l/person-day
・Discharged volume of night soil per person per day	＝(b－40,070－140)÷③	＝2.43 l/person-day
・Designed treatment volume of septic tanks sludge per person per day	＝40,070÷⑦	＝1.50 l/person-day
・Discharged volume of sludge from septic tanks per person per day	＝(40,070＋140)÷⑦	＝1.51 l/person-day

Source: "Waste & Recycling (FY2014)," Ministry of the Environment

5.20 Changes in population using flush toilets and treatment volume of night soil (1)

1. Population by treatment type (Unit：1,000 people)

Group			FY 2002	2003	2004	2005	2006	2007
Total population			127,299	127,507	127,606	127,712	127,781	127,487
Population with flush toilet	Population with public sewage		76,004	78,174	80,061	81,880	83,742	84,982
	Population with community plant		418	362	383	552	361	336
	Population with septic tanks		33,053	32,516	31,947	31,095	30,473	29,863
		Stand-alone	21,038	20,035	19,163	18,303	17,187	15,924
		Combined	12,015	12,481	12,784	12,792	13,286	13,939
	Total		109,475	111,052	112,390	113,526	114,576	115,181
Population without flush toilet	Population covered with scheduled collection		17,348	16,049	14,877	13,920	12,983	12,121
	Self-disposal		476	405	339	266	222	185
	Total		17,824	16,455	15,215	14,186	13,205	12,306
Rate with flush toilets		(%)	86.0	87.1	88.1	88.9	89.7	90.3
Rate without flushing toilet		(%)	14.0	12.9	11.9	11.1	10.3	9.7
Rate with flush toilets using public sewage		(%)	59.7	61.3	62.7	64.1	65.5	66.7
Rate with flush toilets using septic tanks		(%)	26.3	25.8	25.3	24.8	24.1	23.7
Combined treatme		(%)	9.6	10.1	10.3	10.0	10.7	11.2

Notes:
"Combined" of population septic tanks is the sum of population of combined septic tanks and population of Including community plant.
Population of septic tanks is included population using an agricultural community effluent treatment facility.

2. Current night soil treatment

Group				FY2002	2003	2004	2005	2006	2007
Number of total treatment	Number of designed treatment	Night soil treatment facilities		26,406	26,187	25,013	24,191	23,953	23,248
				(89.6)	(90.8)	(91.2)	(91.1)	(91.8)	(93.1)
			Amount of night soil collected	12,720	12,390	11,269	10,400	9,864	9,261
			Amount of septic tanks sludge	13,686	13,797	13,744	13,790	14,089	13,987
		Composting facilities		—	—	—	4	7	11
				—	—	—	(0.0)	(0.0)	(0.0)
			Amount of night soil collected	—	—	—	3	3	4
			Amount of septic tanks sludge	—	—	—	1	3	6
		Methane composting facilities		—	—	—	1	7	15
				—	—	—	(0.0)	(0.0)	(0.1)
			Amount of night soil collected	—	—	—	0	1	5
			Amount of septic tanks sludge	—	—	—	1	6	10
		Outflow to sewage		1,513	1,377	1,293	1,385	1,442	1,476
				(5.1)	(4.8)	(4.7)	(5.2)	(5.5)	(5.9)
			Amount of night soil collected	753	642	575	608	649	581
			Amount of septic tanks sludge	759	734	718	777	793	894
		Farmland reduction		61	60	59	51	48	41
				(0.2)	(0.2)	(0.2)	(0.2)	(0.2)	(0.2)
			Amount of night soil collected	33	34	33	28	25	16
			Amount of septic tanks sludge	28	27	26	23	23	26
		Sea dumping		1,082	842	748	623	393	—
				(3.7)	(2.9)	(2.7)	(2.3)	(1.5)	—
			Amount of night soil collected	390	255	234	192	121	—
			Amount of septic tanks sludge	692	587	514	431	272	—
		Others		61	65	53	109	110	54
				(0.2)	(0.2)	(0.2)	(0.4)	(0.4)	(0.2)
			Amount of night soil collected	34	28	19	30	34	20
			Amount of septic tanks sludge	27	37	34	79	76	35
		Subtotal		29,123	28,531	27,165	26,364	25,960	24,845
				(98.8)	(99.0)	(99.1)	(99.3)	(99.4)	(99.5)
			Amount of night soil collected	13,929	13,349	12,130	11,262	10,698	9,887
			Amount of septic tanks sludge	15,193	15,182	15,035	15,102	15,262	14,959
	Self disposal volume			340	296	257	197	144	129
				(1.2)	(1.0)	(0.9)	(0.7)	(0.6)	(0.5)
		Amount of night soil collected		316	280	243	170	138	123
		Amount of septic tanks sludge		23	16	14	27	7	6
	Total			29,462	28,827	27,422	26,561	26,105	24,974
				(100.0)	(100.0)	(100.0)	(100.0)	(100.0)	(100.0)
		Amount of night soil collected		14,246	13,629	12,374	11,432	10,836	10,010
		Quantity of septic tanks sludge		15,216	15,198	15,049	15,128	15,269	14,964
Designed treatment volume of urine per person per day (l / person・day)				2.20	2.27	2.23	2.22	2.26	2.23
Discharged night soil per person per day (l / person・day)				2.19	2.26	2.23	2.21	2.25	2.22
Designed treatment volume of septic tanks sludge per person per day (l / person・day)				1.24	1.26	1.27	1.31	1.36	1.35
Discharge of sludge from septic tanks per day (l / person・day)				1.25	1.26	1.28	1.31	1.36	1.35

Notes:
"Night soil treatment facilities": Facility to treat excreta by anaerobic digestion process, chemical processing, aerobic treatment ,wet oxidation system etc.
"Sewage input": Outflow or pressurized transportation to a sewage system with terminal treatment plants.
"Farmland reduction": To use collected night soil or septic tanks sludge as fertilizer for farmland.
"Sea dumping": To dump collected night soil or septic tanks sludge into the sea.
Data in parenthesis are the rate of percentage to total.

5.20 Changes in population using flush toilets and treatment volume of night soil (2)

1. Population by treatment type （Unit：1,000 people）

Group			FY2008	2009	2010	2011	2012	2013	2014
Total population			127,529	127,429	127,302	127,146	128,622	128,394	128,181
Population with flush toilet	Population with public sewage		86,027	87,819	88,865	89,810	91,984	92,886	93,685
	Population with community plant		416	297	293	286	289	304	302
	Population with septic tanks		29,267	28,504	28,030	27,591	27,392	26,875	26,386
		Stand-alone	15,413	14,712	13,948	13,316	13,052	12,383	11,822
		Combined	13,854	13,792	14,082	14,276	14,341	14,492	14,564
	Total		115,710	116,620	117,188	117,687	119,666	120,065	120,372
Population without flush toilet	Population covered with scheduled collection		11,301	10,671	9,984	9,348	8,849	8,242	7,727
	Self-disposal		518	139	130	112	107	87	83
	Total		11,819	10,810	10,114	9,460	8,956	8,329	7,810
Rate with flush		(%)	90.7	91.5	92.1	92.6	93.0	93.5	93.9
Rate without flushing toilet		(%)	9.3	8.5	7.9	7.4	7.0	6.5	6.1
Rate with flush toilets using public sewage		(%)	67.5	68.9	69.8	70.6	71.5	72.3	73.1
Rate with flush toilets using septic tanks		(%)	22.9	22.4	22.0	21.7	21.3	20.9	20.6
	Combined treatment	(%)	11.2	11.1	11.3	11.2	11.1	11.3	11.4

2. Conditions of current urine treatment

Group				FY2008	2009	2010	2011	2012	2013	2014
Number of total treatment	Number of designed treatment	Night soil treatment facilities		22,958	22,343	21,678	20,912	20,538	20,497	19,937
				(93.5)	(93.6)	(93.1)	(91.6)	(92.1)	(93.4)	(92.3)
			Amount of night soil collected	8,894	8,353	7,917	7,365	7,018	6,771	6,375
			Amount of septic tanks sludge	14,064	13,989	13,760	13,547	13,519	13,726	13,562
		Composting facilities		28	58	17	15	21	19	25
				(0.1)	(0.2)	(0.1)	(0.1)	(0.1)	(0.1)	(0.1)
			Amount of night soil collected	3	16	4	3	3	2	4
			Amount of septic tanks sludge	25	42	13	13	17	16	21
		Methane composting facilities		16	27	16	16	15	21	20
				(0.1)	(0.1)	(0.1)	(0.1)	(0.1)	(0.1)	(0.1)
			Amount of night soil collected	5	5	4	4	4	6	8
			Amount of septic tanks sludge	11	23	12	12	11	15	11
		Outflow to sewage		1,347	1,265	1,346	1,654	1,544	1,265	1,455
				(5.5)	(5.3)	(5.8)	(7.2)	(6.9)	(5.8)	(6.7)
			Amount of night soil collected	519	455	462	587	502	434	465
			Amount of septic tanks sludge	828	810	884	1,068	1,042	831	991
		Farmland reduction		39	33	72	69	23	18	21
				(0.2)	(0.1)	(0.3)	(0.3)	(0.1)	(0.1)	(0.1)
			Amount of night soil collected	17	9	13	9	9	7	8
			Amount of septic tanks sludge	22	23	59	60	14	11	13
		Sea dumping		-	-	-	-	-	-	-
				-	-	-	-	-	-	-
			Amount of night soil collected	-	-	-	-	-	-	-
			Amount of septic tanks sludge	-	-	-	-	-	-	-
		Others		54	47	69	61	71	39	33
				(0.2)	(0.2)	(0.3)	(0.3)	(0.3)	(0.2)	(0.2)
			Amount of night soil collected	18	16	16	17	14	7	5
			Amount of septic tanks sludge	36	30	53	44	56	32	28
		Subtotal		24,442	23,772	23,198	22,728	22,211	21,859	21,490
				(99.5)	(99.6)	(99.6)	(99.6)	(99.6)	(99.7)	(99.5)
			Amount of night soil collected	9,455	8,855	8,417	7,984	7,551	7,228	6,864
			Amount of septic tanks sludge	14,987	14,917	14,781	14,744	14,660	14,631	14,625
	Self-disposal volume			111	102	83	99	78	76	108
				(0.5)	(0.4)	(0.4)	(0.4)	(0.4)	(0.3)	(0.5)
		Amount of night soil collected		104	91	76	93	62	61	70
		Amount of septic tanks sludge		6	11	7	6	16	15	38
	Total			24,553	23,874	23,280	22,827	22,289	21,935	21,598
				(100.0)	(100.0)	(100.0)	(100.0)	(100.0)	(100.0)	(100.0)
		Amount of night soil collected		9,560	8,946	8,493	8,077	7,613	7,289	6,934
		Amount of septic tanks sludge		14,993	14,928	14,788	14,750	14,676	14,646	14,663
Designed treatment volume of urine per person per day (l / person・day)				2.29	2.27	2.31	2.33	2.34	2.40	2.43
Discharged night soil per person per day (l / person・day)				2.32	2.30	2.30	2.33	2.33	2.40	2.43
Designed treatment volume of septic tanks sludge per person per day (l / person・day)				1.38	1.42	1.43	1.45	1.45	1.47	1.50
Discharge of sludge from septic tanks per day (l / person・day)				1.38	1.42	1.43	1.45	1.45	1.48	1.51

Source: "Waste Treatment in Japan (annual version)," Ministry of the Environment

5.21 Current situations of night soil treatment facilities by prefectures (1)

(FY2014)

	Total Population (Thousand person)	Population using flush toilet (Thousand person)								The population not using flush toilet			
		Public sewage System		Community Plants	Septic tank			Total	The usage rate of flush toilet(%)				
			Use rate of flush toilet(%)			Use rate of flush toilet(%)	Combined Septic Tanks				Population on designed disposal program	Population coverd with designed disposal program (%)	Population under self-disposal process
Hokkaido	5,432	4,769	87.8	0	267	4.9	184	5,036	92.7	396	393	7.3	3
Aomori	1,356	697	51.4	0	469	34.6	210	1,166	86.0	189	189	14.0	0
Iwate	1,303	638	48.9	2	282	21.6	238	921	70.7	382	381	29.3	1
Miyagi	2,328	1,727	74.2	6	283	12.1	186	2,016	86.6	312	308	13.4	5
Akita	1,058	537	50.8	0	265	25.1	198	802	75.8	256	256	24.2	0
Yamagata	1,140	757	66.4	0	278	24.4	203	1,035	90.8	105	105	9.2	0
Fukushima	1,951	897	46.0	6	828	42.4	492	1,731	88.8	220	220	11.3	0
Ibaraki	2,974	1,620	54.5	11	1,090	36.6	574	2,721	91.5	254	253	8.5	0
Tochigi	2,006	1,197	59.7	1	685	34.1	379	1,883	93.8	124	124	6.2	0
Gunma	2,014	940	46.7	24	932	46.3	438	1,896	94.2	118	118	5.8	0
Saitama	7,303	5,545	75.9	9	1,624	22.2	826	7,178	98.3	125	124	1.7	0
Chiba	6,253	4,250	68.0	9	1,805	28.9	895	6,063	97.0	190	190	3.0	1
Tokyo	13,287	13,168	99.1	2	91	0.7	38	13,262	99.8	25	25	0.2	0
Kanagawa	9,117	8,662	95.0	0	419	4.6	136	9,081	99.6	36	36	0.4	0
Niigata	2,339	1,488	63.6	0	692	29.6	281	2,179	93.2	160	160	6.8	0
Toyama	1,086	839	77.2	4	200	18.4	106	1,043	96.0	43	43	4.0	0
Ishikawa	1,160	856	73.8	3	258	22.3	124	1,118	96.3	42	42	3.7	0
Fukui	804	561	69.7	0	207	25.7	108	768	95.4	37	35	4.6	2
Yamanashi	856	493	57.6	6	305	35.7	122	805	94.1	51	51	5.9	0
Nagano	2,149	1,638	76.2	5	306	14.2	196	1,949	90.7	201	200	9.3	0
Gifu	2,046	1,300	63.5	22	622	30.4	334	1,943	95.0	103	102	5.0	0
Shizuoka	3,789	2,114	55.8	15	1,561	41.2	641	3,690	97.4	100	98	2.6	2
Aichi	7,487	5,320	71.1	11	1,996	26.7	1,016	7,327	97.9	160	160	2.1	0
Mie	1,828	836	45.7	7	845	46.2	565	1,688	92.3	140	140	7.7	0
Shiga	1,421	1,172	82.5	0	191	13.4	136	1,363	95.9	58	57	4.1	1
Kyoto	2,629	2,339	89.0	10	155	5.9	94	2,504	95.3	125	123	4.7	2
Osaka	8,871	8,162	92.0	0	522	5.9	239	8,685	97.9	186	186	2.1	0
Hyogo	5,635	5,104	90.6	66	344	6.1	192	5,514	97.9	121	120	2.1	1
Nara	1,396	982	70.3	4	331	23.7	146	1,318	94.4	79	78	5.6	0
Wakayama	1,005	198	19.7	1	599	59.6	327	797	79.4	207	207	20.6	1
Tottori	584	355	60.8	0	175	29.9	70	530	90.8	54	52	9.2	1
Shimane	707	282	39.9	4	277	39.3	202	564	79.8	143	140	20.2	3
Okayama	1,940	1,103	56.8	0	587	30.3	368	1,690	87.1	250	238	12.9	12
Hiroshima	2,870	1,939	67.5	14	598	20.8	392	2,551	88.9	320	307	11.1	13
Yamaguchi	1,433	858	59.9	0	437	30.5	289	1,296	90.4	137	130	9.6	7
Tokushima	778	117	15.1	7	590	75.9	286	715	91.9	63	57	8.1	6
Kagawa	1,006	400	39.7	1	495	49.1	275	895	88.9	112	111	11.1	1
Ehime	1,428	701	49.1	6	568	39.8	304	1,275	89.2	154	152	10.8	1
Kochi	748	223	29.8	8	364	48.7	259	594	79.5	153	151	20.5	2
Fukuoka	5,117	3,906	76.3	13	650	12.7	512	4,569	89.3	548	547	10.7	1
Saga	848	415	49.0	1	222	26.2	187	638	75.3	210	209	24.7	1
Nagasaki	1,415	784	55.4	12	266	18.8	176	1,062	75.0	353	352	25.0	1
Kumamoto	1,819	1,114	61.3	1	477	26.3	279	1,592	87.5	227	224	12.5	3
Oita	1,191	491	41.2	1	559	46.9	291	1,051	88.2	140	130	11.8	10
Miyazaki	1,136	582	51.2	0	434	38.2	292	1,016	89.4	120	120	10.6	0
Kagoshima	1,687	664	39.4	9	808	47.9	547	1,481	87.8	206	206	12.2	0
Okinawa	1,449	945	65.2	0	427	29.4	208	1,372	94.7	78	77	5.3	0
Total	128,181	93,685	73.1	302	26,386	20.6	14,563	120,372	93.9	7,810	7,727	6.1	83

5.21 Current situations of night soil treatment facilities by prefectures (2)

(FY2014)

	Total throughput of resulting products (Thousand KL/Year)									
	Throughput of designed disposal program								Throughput of self-disposal process	Total
	Night soil treatment facilities	Waste Composting Facilities	Methane Composting Facilities	Outflow to sewage	Farmland Reduction	Sea Dumping	Others	Sub Total		
Hokkaido	532	5	9	108	1	-	0	654	4	658
Aomori	435	0	0	0	0	-	0	436	0	436
Iwate	557	0	0	0	0	-	0	557	1	558
Miyagi	445	0	0	0	0	-	0	445	5	450
Akita	422	0	0	0	0	-	0	422	44	466
Yamagata	218	0	0	0	0	-	0	218	0	218
Fukushima	555	0	0	44	0	-	0	599	0	599
Ibaraki	651	0	0	10	0	-	0	662	0	662
Tochigi	329	0	0	0	0	-	0	329	0	329
Gunma	471	7	0	0	0	-	8	486	0	486
Saitama	809	0	0	0	0	-	0	809	0	810
Chiba	796	0	0	11	0	-	0	808	1	808
Tokyo	80	0	0	14	0	-	3	97	0	97
Kanagawa	172	0	0	171	0	-	0	343	1	344
Niigata	395	0	0	100	0	-	0	495	0	496
Toyama	95	0	0	33	0	-	0	128	0	128
Ishikawa	126	0	0	0	0	-	0	126	0	126
Fukui	134	0	0	16	0	-	0	150	1	151
Yamanashi	134	2	0	0	0	-	0	137	0	137
Nagano	310	0	0	27	0	-	0	337	0	337
Gifu	587	0	0	8	0	-	0	595	0	595
Shizuoka	925	0	0	35	0	-	5	965	1	966
Aichi	1,062	0	0	139	0	-	0	1,201	0	1,201
Mie	625	0	0	9	0	-	0	634	0	634
Shiga	165	1	0	25	0	-	0	192	1	193
Kyoto	216	0	0	23	0	-	0	239	2	241
Osaka	457	0	0	118	0	-	0	575	1	576
Hyogo	253	0	0	83	0	-	0	336	1	337
Nara	229	0	0	1	0	-	7	238	0	238
Wakayama	514	0	0	0	0	-	0	514	0	515
Tottori	120	0	0	0	0	-	0	120	1	120
Shimane	282	0	0	1	0	-	0	283	2	284
Okayama	598	0	0	27	0	-	0	625	5	630
Hiroshima	576	0	0	79	0	-	0	655	8	663
Yamaguchi	396	1	0	40	0	-	1	437	5	442
Tokushima	276	0	0	0	0	-	0	276	3	280
Kagawa	179	0	0	1	0	-	0	180	0	180
Ehime	404	0	0	2	0	-	1	407	1	409
Kochi	362	1	0	0	0	-	0	364	1	365
Fukuoka	1,071	0	11	132	0	-	0	1,214	1	1,215
Saga	404	3	0	0	0	-	0	408	1	409
Nagasaki	615	0	0	3	0	-	0	618	1	620
Kumamoto	405	3	0	158	0	-	0	566	1	567
Oita	413	2	0	0	0	-	0	415	7	422
Miyazaki	326	1	0	11	0	-	0	338	0	338
Kagoshima	700	0	0	1	15	-	0	716	0	716
Okinawa	108	0	0	25	4	-	7	144	6	150
Total	19,937	25	20	1,455	21	-	33	21,490	108	21,598

Source: "Waste & Recycling (FY2014)," Ministry of the Environment

5.22 Trends in breakdown of nationwide night soil treatment facilities by type (start-of-construction-basis)

(Unit: KL/Day)

	Anaerobic treatment		Aerobic treatment		Standard Denitrification treatment		High-loading denitrification treatment		Membrane Bioreactor treatment		Others		Total	
	Number of facilities	Processing capacity	Number of facilities	Processing capacity	Number of facilities	Processing capacity	Number of facilities	Processing capacity	Number of facilities	Processing capacity	Number of facilities	Processing capacity	Number of facilities	Processing capacity
FY1990	385	34,580	703	60,008	–	–	–	–	–	–	124	13,777	1,212	108,365
1991	355	30,681	346	33,353	245	26,048	138	9,672	–	–	175	18,053	1,259	117,807
1992	304	26,312	289	22,745	247	25,995	139	10,681	11	509	195	23,068	1,185	109,310
1993	289	24,021	300	22,306	260	27,816	139	10,674	14	653	191	21,558	1,193	107,028
1994	270	22,901	286	21,261	279	30,149	157	12,310	21	994	200	21,080	1,213	108,695
1995	234	19,869	265	19,716	281	30,157	175	13,817	28	1,616	200	20,028	1,183	105,203
1996	210	17,510	246	17,951	286	30,751	187	15,312	29	1,645	210	21,474	1,168	104,643
1997	183	15,585	240	17,215	294	31,251	202	17,525	35	2,042	207	21,422	1,161	105,039
1998	167	14,068	217	14,781	302	31,850	192	16,235	36	2,036	236	24,795	1,150	103,764
1999	142	12,277	194	12,730	300	31,815	195	16,331	40	2,314	245	25,159	1,116	100,625
2000	130	10,996	191	12,166	300	31,908	198	16,498	41	2,375	259	25,917	1,119	99,860
2001	121	9,892	181	11,070	307	32,245	195	16,177	41	2,597	279	27,551	1,124	99,532
2002	101	8,518	169	10,411	306	32,230	196	16,735	40	2,759	299	27,566	1,111	98,219
2003	96	8,090	160	10,005	307	32,375	197	17,177	38	4,401	303	28,716	1,101	100,764
2004	86	7,032	152	9,369	307	31,628	199	16,973	37	4,350	320	29,707	1,101	99,329
2005	76	6,476	136	8,465	288	29,655	203	17,493	38	3,055	317	30,277	1,058	95,420
2006	66	5,856	127	8,005	272	28,363	189	15,980	31	4,264	366	34,733	1,051	97,200
2007	59	4,801	126	7,892	273	28,102	186	15,784	27	3,861	370	33,115	1,041	93,555
2008	56	4,444	118	7,535	268	27,737	182	14,938	26	3,650	389	35,441	1,039	93,745
2009	52	4,144	108	6,961	269	27,748	189	16,285	24	3,573	389	34,654	1,031	93,364
2010	50	3,891	105	6,753	257	26,173	186	16,104	27	3,684	393	34,577	1,018	91,182
2011	44	3,265	94	6,200	251	25,694	184	15,778	27	3,684	400	34,622	1,000	89,243
2012	43	3,159	96	6,469	248	25,608	179	15,030	32	4,062	391	33,556	989	87,884
2013	43	3,059	90	6,001	244	25,153	175	14,529	31	4,074	399	33,975	982	86,791
2014	38	2,779	87	5,899	236	24,663	172	14,336	29	2,204	406	34,983	968	84,864

Notes:
- Facilities established by municipalities and administration associations include idle facilities and facilities started construction in the fiscal year, but not abolished facilities.
- "Standard Denitrification treatment" and "Standard Denitrification treatment" were included in Aerobic treatment prior to survey 1990.
- Membrane Bioreactor treatment is included in others prior to survey 1991.

Source: "Waste & Recycling (Yearly report)," Ministry of the Environment

5.23 Changes in number of installed Johkasou※ (Nationwide)

（Unit: Plant）

		FY2004	FY2005	FY2006	FY2007	FY2008	FY2009
Plant for ~ 20 people		7,659,463	7,676,160	7,688,392	7,534,990	7,480,780	7,340,054
		(5,941,469)	(6,021,016)	(6,097,153)	(6,066,922)	(6,083,458)	(6,098,795)
21～ 100		818,145	808,594	793,545	747,142	730,606	691,535
		(527,228)	(526,998)	(524,396)	(510,199)	(506,074)	(495,735)
101～ 500		134,724	130,645	127,481	121,025	117,473	111,631
		(83,313)	(81,235)	(80,977)	(79,123)	(78,958)	(77,733)
Sub Total		8,612,332	8,615,399	8,609,418	8,403,157	8,328,859	8,143,220
		(6,552,010)	(6,629,249)	(6,702,526)	(6,656,244)	(6,668,490)	(6,672,263)
501～ 1,000		8,633	8,369	8,298	7,971	7,930	7,715
		(6,354)	(6,136)	(6,153)	(5,996)	(6,108)	(6,076)
1,001～ 2,000		4,477	4,463	4,441	4,439	4,372	4,280
		(3,447)	(3,452)	(3,458)	(3,499)	(3,499)	(3,484)
2,001～ 3,000		1,383	1,376	1,384	1,358	1,396	1,328
		(1,077)	(1,077)	(1,094)	(1,082)	(1,112)	(1,085)
3,001～ 4,000		399	407	412	417	411	401
		(312)	(319)	(316)	(329)	(326)	(317)
4,001～ 5,000		245	230	221	221	215	212
		(201)	(194)	(186)	(186)	(182)	(182)
5,001～		335	327	321	321	312	315
		(217)	(221)	(222)	(223)	(222)	(228)
Sub Total		15,472	15,172	15,077	14,727	14,636	14,251
		(11,608)	(11,399)	(11,429)	(11,315)	(11,449)	(11,372)
Total		8,627,804	8,630,571	8,624,495	8,417,884	8,343,495	8,157,471
		(6,563,618)	(6,640,648)	(6,713,955)	(6,667,559)	(6,679,939)	(6,683,635)
Break -down	Black water only type	6,299,840	6,131,836	5,965,513	5,641,662	5,442,181	5,170,659
		(4,258,880)	(4,166,189)	(4,081,040)	(3,916,080)	(3,803,133)	(3,723,893)
	Both black + grey water type	2,327,964	2,498,735	2,658,982	2,776,222	2,901,314	2,986,812
		(2,304,738)	(2,474,459)	(2,632,915)	(2,751,479)	(2,876,806)	(2,959,742)

		FY2010	FY2011	FY2012	FY2013	FY2014	FY2015
Plant for ~ 20 people		7,162,437	7,066,207	7,028,375	6,984,374	6,948,435	6,931,803
		(6,025,052)	(6,004,392)	(6,014,594)	(6,036,702)	(6,047,384)	(6,054,789)
21～ 100		657,270	637,111	620,588	608,635	596,578	589,028
		(480,207)	(473,461)	(465,127)	(462,011)	(455,869)	(451,366)
101～ 500		106,452	101,361	97,088	96,312	93,789	90,750
		(75,982)	(73,629)	(71,416)	(71,116)	(70,070)	(68,212)
Sub Total		7,926,159	7,804,679	7,746,051	7,689,321	7,638,802	7,611,581
		(6,581,241)	(6,551,482)	(6,551,137)	(6,569,829)	(6,573,323)	(6,574,367)
501～ 1,000		7,517	7,155	6,870	6,790	6,655	6,508
		(5,988)	(5,776)	(5,615)	(5,545)	(5,512)	(5,429)
1,001～ 2,000		4,212	4,053	3,943	3,910	3,877	3,775
		(3,465)	(3,374)	(3,313)	(3,297)	(3,312)	(3,266)
2,001～ 3,000		1,326	1,300	1,263	1,250	1,244	1,225
		(1,092)	(1,084)	(1,066)	(1,057)	(1,079)	(1,068)
3,001～ 4,000		388	375	374	372	363	356
		(311)	(301)	(305)	(305)	(302)	(296)
4,001～ 5,000		217	205	199	203	200	195
		(186)	(175)	(171)	(177)	(175)	(173)
5,001～		296	291	286	293	282	275
		(223)	(219)	(215)	(222)	(220)	(218)
Sub Total		13,956	13,379	12,935	12,818	12,621	12,334
		(11,265)	(10,929)	(10,685)	(10,603)	(10,600)	(10,450)
Total		7,940,115	7,818,058	7,758,986	7,702,139	7,651,423	7,623,915
		(6,592,506)	(6,562,411)	(6,561,822)	(6,580,432)	(6,583,923)	(6,584,817)
Break -down	Black water only type	4,883,467	4,674,779	4,531,552	4,368,516	4,233,122	4,124,453
		(3,559,629)	(3,441,912)	(3,356,153)	(3,266,792)	(3,184,853)	(3,103,889)
	Both black + grey water type	3,056,648	3,143,279	3,227,434	3,333,623	3,418,301	3,499,462
		(3,032,877)	(3,120,499)	(3,205,669)	(3,313,640)	(3,399,070)	(3,480,928)

Note:
※Packaged Aerated Wastewater Treatment Plant
・Parenthesized figures in lower rows refer to the number of tanks subjected to new standard structures.

Source: "Governance survey on Johkasou," Ministry of the Environment

5.24 Night soil treatment facilities (established by municipalities and administration associations) by prefecture

(FY2014)

	Anaerobic treatment		Aerobic treatment		Standard Denitrification treatment		High-loading denitrification treatment		Membrane Bioreactor treatment		Others		Total	
	Number of facilities	Processing capacity (kl/Day)	Number of facilities	Processing capacity (kl/Day)	Number of facilities	Processing capacity (kl/Day)	Number of facilities	Processing capacity (kl/Day)	Number of facilities	Processing capacity (kl/Day)	Number of facilities	Processing capacity (kl/Day)	Number of facilities	Processing capacity (kl/Day)
Hokkaido	15	1,046	7	475	1	60	6	167	1	43	31	1,795	61	3,587
Aomori	0	0	0	0	6	872	4	200	0	0	3	562	13	1,634
Iwate	1	105	1	80	4	463	5	672	0	0	5	636	16	1,956
Miyagi	0	0	0	0	5	537	5	536	0	0	6	705	16	1,778
Akita	0	0	1	120	4	572	6	483	0	0	5	467	16	1,642
Yamagata	0	0	0	0	4	592	1	180	0	0	5	347	10	1,119
Fukushima	3	440	3	316	7	535	3	252	0	0	6	563	22	2,106
Ibaraki	1	50	5	384	7	912	9	753	1	39	12	727	35	2,865
Tochigi	0	0	0	0	7	980	6	452	0	0	1	191	14	1,623
Gunma	0	0	5	253	2	174	11	775	1	46	6	573	25	1,821
Saitama	0	0	1	100	14	1,732	4	428	1	80	17	1,523	37	3,863
Chiba	1	200	1	110	9	899	8	935	4	451	11	1,340	34	3,935
Tokyo	0	0	1	23	1	140	1	4	2	281	7	177	12	625
Kanagawa	1	47	1	50	3	309	1	37	0	0	6	630	12	1,073
Niigata	0	0	1	20	7	505	0	0	0	0	14	1,250	22	1,775
Toyama	0	0	1	66	0	0	1	45	0	0	4	420	6	531
Ishikawa	2	155	1	120	3	263	1	80	0	0	6	459	13	1,077
Fukui	0	0	0	0	1	50	4	211	0	0	8	433	13	694
Yamanashi	2	90	3	204	5	230	1	85	1	40	2	151	14	800
Nagano	0	0	1	200	8	1,154	6	599	0	0	10	524	25	2,477
Gifu	1	60	2	106	8	606	6	287	1	35	10	995	28	2,089
Shizuoka	1	36	6	201	10	981	3	301	2	272	15	1,981	37	3,772
Aichi	1	60	5	600	7	1,187	5	527	0	0	13	1,918	31	4,292
Mie	0	0	3	43	5	733	2	340	2	48	7	1,027	19	2,191
Shiga	0	0	2	313	4	501	2	208	0	0	4	170	12	1,192
Kyoto	0	0	4	259	3	221	1	76	1	94	5	421	14	1,071
Osaka	0	0	2	338	3	225	5	819	0	0	10	1,073	20	2,455
Hyogo	0	0	3	132	6	501	3	122	1	44	13	1,268	26	2,067
Nara	1	76	1	3	1	50	4	178	1	6	8	672	16	985
Wakayama	1	2	1	450	6	624	2	135	1	131	4	383	15	1,725
Tottori	0	0	0	0	1	140	3	275	0	0	2	191	6	606
Shimane	0	0	1	40	2	117	4	218	1	125	4	342	12	842
Okayama	0	0	0	0	7	663	3	270	0	0	12	1,267	22	2,200
Hiroshima	1	60	4	98	7	687	5	325	1	176	20	1,252	38	2,598
Yamaguchi	0	0	0	0	5	597	3	93	0	0	10	690	18	1,380
Tokushima	0	0	3	210	6	400	2	45	1	35	4	291	16	981
Kagawa	0	0	1	30	2	257	3	189	1	2	4	450	11	927
Ehime	0	0	0	0	9	1,155	1	35	2	67	4	178	16	1,435
Kochi	1	47	2	40	6	774	3	139	0	0	8	245	20	1,245
Fukuoka	1	90	4	117	7	953	6	957	0	0	14	1,379	32	3,495
Saga	1	10	0	0	3	300	3	475	0	0	6	641	13	1,426
Nagasaki	0	0	1	22	8	702	10	809	0	0	12	688	31	2,221
Kumamoto	1	145	3	161	2	110	3	198	1	91	12	685	22	1,390
Oita	0	0	1	50	5	229	2	140	0	0	10	1,076	18	1,495
Miyazaki	0	0	0	0	6	375	3	262	0	0	11	593	20	1,230
Kagoshima	0	0	2	123	8	516	2	19	2	98	14	1,270	28	2,026
Okinawa	2	60	3	43	1	80	0	0	0	0	5	366	11	549
Total	38	2,779	87	5,899	236	24,663	172	14,336	29	2,204	406	34,983	968	84,864

Note: Figures include facilities of which constructionstarted in FY2014 and idle facilities, but not abolished facilities.

Source: "Waste treatment in Japan (FY2014)," Ministry of the Environment

5.25 Diffusion of Johkasou and community plants by prefecture

(As of the end of FY2015)

	Rate of population served by sewage treatment system	Coverage rate of Johkasou (Both black + grey water type)	Coverage rate of community plants
Hokkaido	95.0%	3.0%	0.0%
Aomori	77.1%	9.6%	0.0%
Iwate	79.0%	13.0%	0.1%
Miyagi	89.8%	6.4%	0.3%
Akita	85.4%	11.4%	0.0%
Yamagata	90.8%	7.9%	0.0%
Fukushima	81.1%	21.9%	0.0%
Ibaraki	82.6%	16.0%	0.3%
Tochigi	84.4%	15.5%	0.1%
Gunma	78.5%	18.5%	1.2%
Saitama	90.6%	9.5%	0.0%
Chiba	86.6%	12.8%	0.1%
Tokyo	99.7%	0.2%	0.0%
Kanagawa	97.9%	1.3%	0.0%
Niigata	85.9%	5.3%	0.0%
Toyama	96.1%	3.3%	0.3%
Ishikawa	93.3%	4.4%	0.2%
Fukui	94.2%	4.9%	0.0%
Yamanashi	80.7%	13.3%	0.7%
Nagano	97.4%	5.7%	0.0%
Gifu	91.0%	10.2%	0.2%
Shizuoka	78.7%	15.4%	0.4%
Aichi	89.1%	10.3%	0.1%
Mie	82.6%	25.2%	0.2%
Shiga	98.5%	2.8%	0.0%
Kyoto	97.6%	2.2%	0.0%
Osaka	97.3%	2.0%	0.0%
Hyogo	98.7%	1.9%	1.2%
Nara	87.7%	8.0%	0.2%
Wakayama	60.6%	30.3%	0.0%
Tottori	92.7%	6.0%	0.1%
Shimane	77.8%	15.1%	0.6%
Okayama	84.4%	16.4%	0.0%
Hiroshima	86.6%	11.4%	0.5%
Yamaguchi	85.6%	16.3%	0.0%
Tokushima	57.3%	36.1%	1.0%
Kagawa	74.3%	28.5%	0.1%
Ehime	76.3%	20.7%	0.2%
Kochi	74.8%	34.7%	0.2%
Fukuoka	91.1%	9.4%	0.3%
Saga	81.1%	14.4%	0.1%
Nagasaki	78.8%	13.5%	0.4%
Kumamoto	85.3%	14.2%	0.0%
Oita	73.6%	21.2%	0.1%
Miyazaki	83.8%	21.2%	0.0%
Kagoshima	77.7%	33.6%	0.3%
Okinawa	85.5%	10.0%	0.0%
Total	89.9%	9.1%	0.2%
(The end of FY2014)	(89.5%)	(8.9%)	(0.2%)

Note:

In FY2015, Soma city, Minamisoma city, Hirono town, Naraha town, Tomioka town, Kawauchi village, Okuma town, Futaba town, Namie town, Katsurao village and Iitate village in Fukushima prefecture were out of the scope of the survey to tabulate because they were affected by the Great East Japan Earthquake.

Source: "Diffusion of Johkasou (as of the end of FY2015)," Ministry of the Environment

5.26 Population served by waste-water treatment system by year

	Rate of population served by waste water treatment system (B/A)	Total population (A) (Thousand person)	Total population served by waste-water treatment system (B) (Thousand person)	Sewage system (Thousand person)	Agricultural drainage facilities (Thousand person)	Johkasou (Both black + grey water type) (Thousand person)	Community Plant (Thousand person)
FY2000	71.4%	126,285	90,182	78,031	2,589	9,139	423
2001	73.7%	126,478	93,260	80,317	2,896	9,646	402
2002	75.8%	126,688	95,990	82,570	3,106	9,932	382
2003	77.7%	126,824	98,536	84,584	3,280	10,297	375
2004	79.4%	126,869	100,793	86,365	3,439	10,618	371
2005	80.9%	127,055	102,815	88,021	3,521	10,926	347
2006	82.4%	127,053	104,680	89,610	3,607	11,142	322
2007	83.7%	127,066	106,347	91,106	3,697	11,214	330
2008	84.8%	127,076	107,741	92,412	3,741	11,273	314
2009	85.7%	127,058	108,899	93,600	3,785	11,236	278
※ 2010	86.9%	121,233	105,311	91,035	3,435	10,590	250
※ 2011	87.6%	123,350	108,104	93,548	3,502	10,794	263
※ 2012	88.1%	126,396	111,378	96,446	3,601	11,065	266
※ 2013	88.9%	126,186	112,160	97,136	3,564	11,208	251
※ 2014	89.5%	126,017	112,755	97,751	3,520	11,245	239
※ 2015	89.9%	127,663	114,741	99,259	3,583	11,667	232

Notes:

・Due to rounding off, a sum of the breakdown may not match the total population.

・The figure of r "Total Population" is quoted from population of Basic Resident Register published by Ministry of Internal Affairs and Communications.

・In FY2010, Iwate, Miyagi, and Fukushima prefectures were out of the scope of the survey to tabulate because the prefectures were affected by the Great East Japan Earthquake.

・In FY2011, Iwate and Fukushima prefectures were out of the scope of the survey to tabulate because the prefectures were affected by the Great East Japan Earthquake.

・In FY2012, 2013 and 2014, Fukushima prefecture was out of the scope of the survey to tabulate because the prefecture was affected by the Great East Japan Earthquake.

・In FY2015, Soma city, Minamisoma city, Hirono town, Naraha town, Tomioka town, Kawauchi village, Okuma town, Futaba town, Namie town, Katsurao village and Iitate village in Fukushima prefecture were out of the scope of the survey to tabulate because they were affected by the Great East Japan Earthquake.

・Due to evacuation caused by the Great East Japan Earthquake, the population in Fukushima prefecture is fluid.

Source: From materials for " press release of "population served by waste disposal system (September, 2015), " Ministry of the Environment

5.27 Changes in expenses for night soil treatment projects

（Unit： Million yen / year）

				FY2002	2003	2004	2005	2006	2007	2008	2009	2010	2011	2012	2013	2014
Total population (Thousand people)				127,299	127,507	127,606	127,712	127,781	127,487	127,529	127,429	127,302	127,146	128,622	128,394	128,181
Target population			Septic tanks	33,471	32,879	32,330	31,646	30,834	30,199	29,683	28,801	28,323	27,877	27,682	27,179	26,687
			Total Population without flush toilet	17,824	16,455	15,215	14,186	13,205	12,306	11,819	10,810	10,114	9,460	8,956	8,329	7,810
			Total	51,295	49,333	47,545	45,832	44,039	42,505	41,502	39,611	38,437	37,337	36,638	35,508	34,497
Revenues (Municipalities)	General revenue source			226,355	218,735	208,676	203,003	196,471	198,554	186,694	180,919	172,002	173,892	169,832	220,491	225,144
	Earmarked revenue sources		National treasury disbursement	4,434	3,824	5,181	8,321	6,869	4,870	4,542	4,167	5,860	4,398	4,265	170,434	174,957
			Prefectural disbursement	2,108	2,276	1,794	1,903	2,224	1,510	1,309	1,285	1,386	1,411	1,235	5,278	7,076
			Handling fees/commissions	25,495	23,400	24,690	25,445	36,782	34,436	32,538	31,601	29,946	29,225	28,598	1,819	1,033
			Local Bonds	8,565	4,285	8,072	16,186	21,706	8,241	7,725	8,492	6,514	10,341	7,400	27,887	26,806
			Others	4,782	5,903	5,550	8,602	7,730	7,496	6,663	6,803	5,905	7,123	5,350	9,353	9,490
			Subtotal	45,383	39,688	45,286	60,456	75,311	56,553	52,776	52,347	49,612	52,498	46,848	5,721	5,782
			Total	271,738	258,423	253,962	263,459	271,782	246,107	239,470	233,266	221,613	226,389	216,680	50,057	50,187
Expenditure (Total of municipalities and cooperatives)	Expenses for night soil treatment			335,231	314,519	310,648	313,596	271,782	246,107	238,737	231,594	221,613	226,332	216,634	220,491	225,144
	Construction and improvement costs	Construction	Expenses for travelling or the like.	–	–	–	–	4,373	1,252	683	591	688	267	219	455	797
			Intermediate processing facilities	53,219	42,522	46,640	57,569	31,090	13,164	15,157	19,192	16,992	22,147	16,557	20,561	27,144
			Final disposal site	3,687	2,499	2,929	4,996	2,547	884	96	169	367	690	357	1,531	302
			Others	4,527	6,763	5,480	3,636	2,948	2,457	1,191	1,054	904	1,327	1,617	942	691
			Inspection fee	551	634	432	1,918	287	297	274	454	396	342	396	1,077	380
			Subtotal	61,984	52,417	55,481	68,119	41,245	18,054	17,401	21,461	19,347	24,772	19,147	24,565	29,313
	(Reference) Financial contributions to partial-affairs association			7,644	7,764	6,525	7,677	3,473	1,899	2,377	3,779	4,119	5,387	2,979	4,506	3,615
	Processing and maintenance costs, etc.	Labor cost		71,816	67,528	64,541	60,463	57,199	59,496	55,757	50,413	47,251	45,326	42,993	40,548	40,071
		Treatment costs	Collection and transportation	5,911	5,716	5,129	4,949	3,665	4,865	5,256	3,937	3,704	3,752	3,532	2,588	2,737
			Intermediate treatment	80,766	75,088	73,745	71,164	70,420	65,496	66,837	63,317	61,808	61,073	60,936	60,632	62,031
			Final disposal	3,852	3,555	4,000	2,888	2,679	2,630	2,624	2,070	1,777	1,906	2,085	2,047	2,114
		Purchasing vehicles and related costs		804	515	704	463	451	374	415	491	437	343	249	332	392
		Outsourcing costs	Collection and transportation	–	–	–	36,076	33,746	31,086	29,983	28,906	27,865	27,178	26,181	26,066	25,920
			Intermediate treatment	–	–	–	30,240	32,105	33,571	33,657	35,041	35,824	38,062	38,071	40,015	40,532
			Final disposal	–	–	–	7,502	5,510	4,635	4,444	4,143	3,470	3,631	3,104	3,545	3,348
			Others	–	–	–	8,713	4,547	4,342	3,835	4,601	3,868	3,719	3,623	4,535	4,531
			Total outsourcing costs	80,473	79,432	76,977	82,530	75,908	73,633	71,920	72,690	71,026	72,590	70,979	74,160	74,331
		Others		12,301	12,172	11,640	–	–	–	–	–	–	16,471	16,621	15,433	13,984
		Research expenses		–	–	–	704	103	63	67	169	227	99	93	186	170
		Subtotal		255,922	244,007	236,736	223,162	210,424	206,558	202,875	193,087	186,231	185,089	180,866	180,494	181,847
	(Reference) Financial contributions to partial-affairs association			103,433	98,838	93,326	81,268	77,326	75,124	73,951	72,664	67,887	65,849	66,250	64,546	66,589
	Others			17,325	18,094	18,431	22,315	20,112	21,495	18,461	17,046	16,035	16,471	16,621	15,433	13,984
Expenses of urine treatment project per person (Yen / person, year)				6,500	6,400	6,500	6,800	6,200	5,800	5,800	5,800	5,800	6,100	5,900	6,200	6,500

Note:
"Financial contributions to a partial-affairs association" are payable to a partial-affairs association from the municipality and are not included in the totals because they are appropriated for the expenses of the treatment projects.

Source: "Waste Treatment in Japan (annual version)," Ministry of the Environment

5.28 Production and Shipment of Major Agrochemicals

Agrochemical type	Production/ shipment	2012 Agrochemical year	2013	2014	2015
Insecticides	Production	82,878	82,831	82,526	81,015
	Shipment	83,711	84,356	83,162	76,202
Disinfectants	Production	44,397	43,965	45,114	43,536
	Shipment	43,900	43,245	43,238	41,722
Insect - fungicides	Production	23,200	20,086	20,765	20,213
	Shipment	20,991	20,266	19,844	19,054
Herbicides	Production	72,923	78,345	82,410	81,875
	Shipment	71,423	75,511	77,406	78,866
Rodenticides	Production	308	344	304	321
	Shipment	338	349	337	315
Plant growth regulators (PGRs)	Production	1,877	1,544	1,590	1,581
	Shipment	1,618	1,692	1,652	1,457
Adjuvants	Production	2,851	2,833	2,898	2,779
	Shipment	2,824	2,750	2,887	2,760
Other	Production	7,080	8,827	8,068	7,691
	Shipment	7,619	8,176	8,019	7,403
Total	Production	235,515	238,773	243,675	239,011
	Shipment	232,483	236,345	236,545	227,779

Notes:
- Unit: t or kl.
- An agrochemical year refers a year from October in the previous year to September in the current year.
- "Other" under the heading "Agrochemical type" presents a total of the following:
  agrochemical fertilizer; insect-fungicide-PGR combination; repellent; lime and others (excluding calcium cyanamide).

Source: "Agrochemical handbook 2016," Japan Plant Protection Association

5.29 Production of chemical fertilizer

（Unit：t）

Chemical fertilizer year	Ammonium sulfate	Calcium cyanamide	Urea	Ammonium nitrate	Ammonium chloride
2005	1,419,512	60,187	427,150	39,319	91,938
2006	1,455,571	55,422	449,579	35,532	84,667
2007	1,479,520	51,019	453,487	29,400	67,147
2008	1,208,438	49,466	403,417	30,400	77,744
2009	1,351,078	49,439	366,955	-	70,611
2010	1,320,726	42,969	412,670	-	74,293
2011	1,270,308	52,511	453,487	-	73,976
2012	1,224,963	47,913	358,338	-	79,284
2013	1,215,016	46,251	347,536	-	74,508
2014	1,125,979	37,957	304,768	-	65,685

Chemical fertilizer year	Calcium superphosphate	Double/triple superphosphate	Calcined phosphate	Fused phosphate	High analysis compound fertilizers
2005	186,831	19,223	79,804	68,410	1,034,520
2006	175,100	22,423	69,160	63,941	965,793
2007	185,479	30,243	71,183	70,738	939,907
2008	165,332	22,465	52,788	61,388	721,445
2009	137,534	7,839	45,962	48,724	718,235
2010	149,328	8,672	62,677	49,666	791,827
2011	139,312	8,819	55,295	46,654	790,627
2012	124,298	6,783	50,135	41,075	785,899
2013	106,035	8,587	46,520	36,578	774,394
2014	107,076	9,035	47,017	31,270	720,239

Notes:
- Data for Ammonium nitrate are no longer taken after FY2009.
- Chemical fertilizer year starts on July 1st and finishes on June 30th in the following year.

Source: "Pocket handbook of chemical fertilizer," Association of Agriculture and Forestry Statistics

5.30 Changes in numbers of soil pollution incidents where Environmental Quality Standards (EQS) were exceeded

	Indicents that exceeded EQS for soil pollution	
Prior to FY1993	32	
1994	25	
1995	37	
1996	50	
1997	48	
1998	130	
1999	130	
2000	151	
2001	210	
2002	274	(0)
2003	366	(21)
2004	456	(43)
2005	673	(48)
2006	696	(77)
2007	728	(81)
2008	700	(71)
2009	575	(94)
2010	798	(275)
2011	943	(468)
2012	906	(487)
2013	867	(479)
2014	938	(586)
Cumulative Total	8,795	(2,144)

Notes:
- "Incidents that exceed EQS" refers to the number of incidents that exceed either the designated standards by the Soil Contamination Countermeasures Act or EQS for soil contamination.
- Parenthesized figures are the numbers of over-the-standards incidents identified by a survey based on laws.

Source: "The survey on the enforcement status of the Soil Contamination Countermeasures Act and Soil Contamination Investigations and Countermeasures in FY 2014," Ministry of the Environment

5.31 Number of soil contamination investigations and countermeasures taken by prefecture

Prefectures (including ordinance-designated cities)		Number of cases						
		Number of survey results reported	Number of designated cases	VOC	Heavy metals and the like	Agrochemicals and the like	Complex contamination	Survey not conducted
Hokkaido area	Hokkaido	79	44	9	26	0	5	4
	Total	79	44	9	26	0	5	4
Tohoku area	Aomori	27	11	0	9	0	0	2
	Iwate	25	9	1	7	0	1	0
	Miyagi	57	46	6	35	0	3	2
	Akita	11	5	0	5	0	0	0
	Yamagata	29	6	1	5	0	0	0
	Fukushima	71	40	0	37	0	2	1
	Total	220	117	8	98	0	6	5
Kanto area	Ibaraki	65	32	1	25	0	6	0
	Tochigi	53	26	5	14	0	7	0
	Gunma	95	30	2	23	0	4	1
	Saitama	296	159	28	111	0	19	1
	Chiba	143	87	11	66	1	7	2
	Tokyo	1,032	582	58	455	0	67	2
	Kanagawa	506	283	41	196	0	37	9
	Niigata	120	45	11	33	0	1	0
	Yamanashi	45	26	4	19	0	3	0
	Shizuoka	117	59	3	42	0	10	4
	Total	2,472	1,329	164	984	1	161	19
Chubu area	Toyama	13	9	4	5	0	0	0
	Ishikawa	35	19	0	18	0	1	0
	Fukui	31	14	2	11	0	0	1
	Nagano	46	28	5	16	0	7	0
	Gifu	52	27	5	22	0	0	0
	Aichi	285	127	12	105	0	8	2
	Mie	21	4	1	1	0	0	2
	Total	483	228	29	178	0	16	5
Kinki area	Shiga	63	15	0	14	0	1	0
	Kyoto	91	58	2	51	0	4	1
	Osaka	621	372	17	312	0	37	6
	Hyogo	277	170	16	140	1	10	3
	Nara	15	8	1	7	0	0	0
	Wakayama	21	6	1	4	0	0	1
	Total	1,088	629	37	528	1	52	11
Chugoku・shikoku area	Tottori	13	6	0	5	0	1	0
	Shimane	8	2	0	2	0	0	0
	Okayama	39	25	3	22	0	0	0
	Hiroshima	73	38	2	31	0	4	1
	Yamaguchi	39	32	3	25	0	4	0
	Tokushima	17	2	1	1	0	0	0
	Kagawa	30	13	1	11	0	1	0
	Ehime	21	5	0	4	0	1	0
	Kochi	1	1	0	1	0	0	0
	Total	241	124	10	102	0	11	1
Kyushu area	Fukuoka	151	79	4	60	0	10	5
	Saga	8	4	0	4	0	0	0
	Nagasaki	30	25	2	22	0	1	0
	Kumamoto	32	24	2	22	0	0	0
	Oita	24	17	2	15	0	0	0
	Miyazaki	16	4	0	4	0	0	0
	Kagoshima	37	11	0	11	0	0	0
	Okinawa	13	3	0	2	0	1	0
	Total	311	167	10	140	0	12	5
Grand Total		4,894	2,638	267	2,056	2	263	50

Note
- The figures are the number of surveys conducted based on the Soil Contamination Countermeasures Act.
- The figures are cumulative total from the enforcement date of the Soil Contamination Countermeasures Act (February 15th, 2003) to the end of FY2014.

Source: "The survey on the enforcement status of the Soil Contamination Countermeasures Act and Soil Contamination Investigations and Countermeasures in FY 2014," Ministry of the Environment

5.32 Progress of agricultural land soil pollution countermeasures

Specific harmful substance		①Area where values above the standard levels were detected, etc.	② Designated area needing countermeasures	③Area where plans for countermeasures have been already formulated	④Area where project for countermeasures have been already completed	⑤ Designation has canceled	⑥Not yet	⑦Area with projects for countermeasures in progress	⑧Area where formulation of plans for countermeasures is in progress	⑨Area completed a project by the sole prefecture	⑩ Undesignated area
Cadmium		7,050ha	6,460ha	6,375ha	6,176ha	5,939ha	237ha	199ha	85ha	393ha	196ha
		97	64	64	63	59	11	13	1	52	17
Copper		1,405ha	1,225ha	1,225ha	1,199ha	1,169ha	30ha	26ha	—	171ha	9ha
		37	12	12	12	12	1	1	—	25	1
Arsenic		391ha	164ha	164ha	164ha	150ha	14ha	—	—	162ha	65ha
		14	7	7	7	6	1	—	—	7	5
Total	Area	7,592ha	6,609ha	6,524ha	6,325ha	6,074ha	251ha	199ha	85ha	713ha	270ha
	# of areas	134	73	73	72	67	12	13	1	80	22
							⑪Completed area（＝④＋⑨）			7,038ha	
							⑫Progression rate (＝⑪／①×100）			92.7%	

（Upper row: Area, Lower row: Number of areas）

Notes:

・"Area where values above the standard levels were detected, etc. is based on the results of detailed investigation until fiscal year 2015.
・When added up the columns vertically, the sum does not match the "Total"column because of multiple contaminations.
・When added up the rows horizontally, the sum of the regions is not consistent with the value in "Total" since there are some areas where designation is partially canceled, or projects for countermeasures are partially completed.
・"Area where plans for countermeasures have been already completed" among "Area where plans for countermeasures have been formulated" refers to the area where state-subsidized surface work has been completed as well as the areas that have been changed their purposes of use.
・"Area completed a project by the sole prefecture" includes the area that no longer contamination is detected as the area has been changed its use in purposes.

Source: "Enforcement status of the Soil Contamination Countermeasures Act for farmland in FY 2015," Ministry of the Environment

5.33 Designated-contamination areas and areas with projects for countermeasures completed in each year

(Unit: ha)

	①Above the detection standard value	②Designated area	③Formuration of plans for countermeasures	④Completation of projects for countermeasures		⑤Area which requires future countermeasures
	Cumulative area	Cumulative	Cumulative	Current FY	Cumulative	Current FY
FY 1970						
1971		112				
1972		400	164	70	70	
1973		1,140	357	30	100	
1974		2,579	502	30	130	
1975	6,100	3,398	713	40	170	5,930
1976	6,200	4,110	887	460	630	5,570
1977	6,390	4,336	1,650	10	640	5,750
1978	6,440	4,459	1,896	340	980	5,460
1979	6,510	4,577	2,334	370	1,350	5,160
1980	6,530	4,674	2,836	250	1,600	4,930
1981	6,610	4,891	3,015	270	1,870	4,740
1982	6,700	5,390	3,233	250	2,120	4,580
1983	6,710	5,451	4,148	320	2,440	4,270
1984	6,910	5,616	4,197	250	2,690	4,220
1985	7,030	6,053	4,364	330	3,020	4,010
1986	7,030	6,053	4,660	280	3,300	3,730
1987	7,030	6,078	4,841	320	3,620	3,410
1988	7,050	6,122	4,865	340	3,960	3,090
1989	7,050	6,146	4,911	220	4,180	2,870
1990	7,050	6,146	4,938	180	4,360	2,690
1991	7,050	6,146	6,021	120	4,480	2,570
1992	7,140	6,214	6,021	120	4,600	2,540
1993	7,140	6,255	6,105	120	4,720	2,420
1994	7,140	6,258	6,170	200	4,920	2,220
1995	7,140	6,258	6,170	240	5,160	1,980
1996	7,140	6,262	6,173	140	5,300	1,840
1997	7,140	6,265	6,176	110	5,410	1,730
1998	7,152	6,266	6,178	160	5,570	1,582
1999	7,156	6,266	6,181	61	5,631	1,525
2000	7,166	6,266	6,181	187	5,818	1,348
2001	7,217	6,275	6,181	54	5,872	1,345
2002	7,224	6,275	6,181	182	6,054	1,170
2003	7,228	6,276	6,190	254	6,308	920
2004	7,327	6,376	6,236	49	6,357	970
2005	7,327	6,376	6,236	41	6,398	929
2006	7,483	6,577	6,306	162	6,560	923
2007	7,487	6,577	6,306	20	6,580	907
2008	7,487	6,577	6,492	20	6,600	887
2009	7,487	6,577	6,492	105	6,705	782
2010	7,575	6,577	6,492	23	6,728	847
2011	7,575	6,577	6,492	57	6,785	790
2012	7,592	6,577	6,492	119	6,904	688
2013	7,592	6,577	6,492	40	6,944	648
2014	7,592	6,609	6,492	32	6,976	616
2015	7,592	6,609	6,524	62	7,038	554

Notes:

・"③Formuration of plans for countermeasures" column is tabulated by the year when Minister of Environment approved the plans.
・"④Completation of projects for countermeasures" includes the area where countermeasures only by prefectures have been completed. Also, partially completed areas are not included in fiscal year 1977.
・Figures of "④Completation of projects for countermeasures" and "⑤Area which requires future countermeasures" from FY2009 to FY2014 were updated.

Source: "Enforcement status of the Soil Contamination Countermeasures Act for farmland in FY 2015," Ministry of the Environment

5.34 Use of ground water in Japan

(Unit : Ten thousand m^3 / year)

		Total amount of water used	Surface water and the like	Ground water	Dependency on ground water (%)	Source
FY 1972	For industrial use	127.7	82.0	45.7	36	1972 Statistical Charts on Industry
	For city water	116.3	90.0	26.3	23	FY 1972 Statistics on water supply
	For agriculture	528	495.3	32.7	6.2	Refer to the Notes at the bottom.
1978	For industrial use	116.9	77.7	39.2	34	1977 Statistical Charts on Industry
	For city water	132.9	105.0	27.9	21	FY 1977 Statistics on water supply
	For agriculture	570	532.5	37.5	6.6	Refer to the Notes at the bottom.
1983	For industrial use	105.4	72.6	32.9	31	1982 Statistical Charts on Industry
	For city water	140.6	110.4	30.2	21	FY 1982 Statistics on water supply
	For agriculture	580	542.5	37.5	6.5	Refer to the Notes at the bottom.
1987	For industrial use	103.3	72.5	30.8	30	1987 Statistical Charts on Industry
	For city water	152.2	118.0	34.2	22	FY 1987 Statistics on water supply
	For agriculture	585	546.2	38.8	7	1990 Water supply in Japan
1993	For industrial use	107.0	76.5	30.5	29	1992 Statistical Charts on Industry
	For city water	167.4	131.0	36.4	22	FY 1992 Statistics on water supply
	For agriculture	586	547.2	38.8	7	1994 Water supply in Japan
1998	For industrial use	101.0	73.3	27.8	27	1997 Statistical Charts on Industry
	For city water	169.3	132.6	36.7	22	FY 1997 Statistics on water supply
	For agriculture	589.7	550.9	38.8	7	1999 Water supply in Japan
2003	For industrial use	92.4	68.4	24.0	26	2002 Statistical Charts on Industry
	For city water	165.0	130.4	34.6	21	FY 2002 Statistics on water supply
	For agriculture	568.0	535.0	33.0	6	2004 Water supply in Japan
2008	For industrial use	90.1	67.7	22.4	25	2007 Statistical Charts on Industry
	For city water	161.7	129.1	32.6	20	FY 2007 Conditions of the source of water supply
	For agriculture	547.0	514.0	33.0	6	2009 Water supply in Japan
2009	For industrial use	87.5	66.2	21.3	24	2008 Statistical Charts on Industry
	For city water	159.1	127.3	31.8	20	FY 2008 Conditions of the source of water supply
	For agriculture	546.0	513.0	33.0	6	2010 Water supply in Japan
2010	For industrial use	82.4	62.7	19.7	24	2009 Statistical Charts on Industry
	For city water	158.2	127.0	31.2	20	FY 2009 Conditions of the source of water supply
	For agriculture	546.0	517.3	28.7	5	2011 Water supply in Japan
2011	For industrial use	83.5	63.5	20.0	24	2010 Statistical Charts on Industry
	For city water	158.4	127.0	31.4	20	FY 2010 Conditions of the source of water supply
	For agriculture	544.0	515.3	28.7	5	2012 Water supply in Japan
2012	For industrial use (2011)	79.5	60.3	19.2	24	2011 Statistical Charts on Industry
	For city water (FY 2011)	157.3	126.5	30.8	20	FY 2011 Conditions of the source of water supply
	For agriculture (2008)	546.0	517.3	28.7	5	2013 Water supply in Japan
2013	For industrial use (2012)	81.0	61.4	19.6	24	2012 Statistical Charts on Industry
	For city water (FY 2012)	155.9	125.4	30.5	20	FY 2012 Conditions of the source of water supply
	For agriculture (2008)	546.0	517.3	28.7	5	2014 Water supply in Japan
2014	For industrial use (2013)	79.4	60.3	19.0	24.0	2013 Statistical Charts on Industry
	For city water (FY 2013)	155.4	125.2	30.2	19.5	FY 2012 Conditions of the source of water supply
	For agriculture (2008)	546.0	517.3	28.7	5.3	2014 Water supply in Japan
2015	For industrial use (2014)	79.2	59.6	19.6	24.7	2013 Statistical Charts on Industry
	For city water (FY 2014)	153.3	123.7	29.6	19.3	FY 2013 Conditions of the source of water supply
	For agriculture (2008)	546.0	517.3	28.7	5.3	2014 Water supply in Japan

Note:

・Data for industrial use is calculated from by "Statistical chart on industry", Ministry of Economy, Trade and Industry, based on 300 operating days.
Total quantity of water for industrial use refers to freshwater abstraction except recycled water, and ground water refers to water from wells (water taken from shallow wells, deep wells and spring water).
・Data for water and sewerage service prior to FY 2003 was tabulated (water supply and wholesale supply were combined) based on the quantity of water abstraction from 'Statistics on water supply survey' provided from Ministry of Health, Labor and Welfare.
Ground water refers to water from wells (both shallow wells and deep wells).

Source: Total quantity of water for agriculture and the quantity of ground water for agriculture for FY 1972 were provided by Ministry of Agriculture, Forestry and Fisheries
Data of total quantity of water for agriculture in 1978 is an estimated data for water demand in 1983
Figure of ground water for agricultural use is from "Survey on use of underground water for agricultural use" (actual FY1979) , Ministry of Agriculture, Forestry, and Fisheries
Data of total quantity of water for agriculture in 1983 is an estimated data for water demand in 1980

5.35 Changes in nationwide ground subsidence

	Area subsided at 2 cm or more per year		Area subsided at 4 cm or more per year	
	Number of areas	Square kilometers (km^2)	Number of areas	Square kilometers (km^2)
FY 1978	28	1,946	13	404
1979	25	624	9	176
1980	23	467	8	100
1981	25	689	8	60
1982	22	616	8	45
1983	22	594	6	45
1984	31	814	12	161
1985	19	499	7	40
1986	18	396	6	7
1987	12	500	7	22
1988	17	617	5	63
1989	16	285	4	7
1990	18	360	5	14
1991	17	467	4	6
1992	19	525	6	25
1993	11	276	1	0
1994	21	902	6	113
1995	14	21	2	0
1996	13	258	4	22
1997	9	244	–	–
1998	9	250	–	–
1999	9	6	–	–
2000	7	6	–	–
2001	9	28	–	–
2002	8	461	–	–
2003	6	3	1	0
2004	9	176	2	0
2005	7	4	–	–
2006	5	17	1	1
2007	9	72	–	–
2008	3	1	2	0
2009	6	24	1	0
2010	6	6	–	–
2011	14	5,920	11	4,061
2012	7	2	–	–
2013	4	1	–	–
2014	2	2	–	–
2015	6	21	–	–

Note:
- Area is not measured for all areas subject to.
- "-" shows that there is no relevant data.
- "0" indicates to the case that the value is less than 0.5㎢.
- Area expressed in terms of Km2 is rounded off at the first digit.
- The data in FY 2011 includes ground subside cases that are considered to be affected by Great East Japan Earthquake.

Source: "Nationwide ground subsidence in FY 2015," Ministry of the Environment

6.01 Changes in number of facilities emitting soot and smoke

（Unit: Number of Facilities）

	Apparatus exhausting soot and smoke							
	Boiler	Diesel engine	Waste incinerator	Metal-heating furnace	Drying furnace	Metal-Melting furnace	Others	Total
FY1991	127,536	12,185	9,321	8,555	7,634	4,649	12,980	182,860
1992	129,637	13,642	10,569	8,503	7,606	4,625	12,608	187,190
1993	131,314	17,170	10,809	8,415	7,570	4,631	13,525	193,434
1994	133,546	18,258	11,142	8,319	7,651	4,618	9,669	193,203
1995	136,094	18,939	11,556	8,266	7,742	4,677	14,392	201,666
1996	137,089	20,250	10,939	8,184	7,773	4,579	14,349	203,163
1997	138,803	21,223	10,924	8,367	7,813	4,658	14,657	206,445
1998	140,830	19,313	10,372	8,385	7,910	4,556	17,438	208,804
1999	141,047	25,541	10,116	8,300	7,760	4,778	16,575	214,117
2000	137,149	26,063	9,102	8,043	7,629	4,661	22,055	214,702
2001	137,191	26,684	8,861	7,761	7,536	4,622	22,165	214,820
2002	141,149	28,115	7,361	7,433	7,480	4,394	19,229	215,161
2003	140,150	29,901	6,912	7,431	7,563	4,300	17,900	214,157
2004	141,317	31,425	6,788	7,430	7,485	4,312	18,197	216,954
2005	142,070	32,722	6,584	7,438	7,430	4,270	18,188	218,702
2006	141,466	32,608	6,391	7,478	7,371	4,242	18,958	218,514
2007	140,865	32,851	6,304	7,434	7,352	4,285	19,297	218,388
2008	141,787	33,195	6,151	7,528	7,272	4,320	19,755	220,008
2009	140,132	33,633	5,985	7,597	7,185	4,264	19,899	218,695
2010	138,931	33,725	5,889	7,557	7,057	4,105	19,924	217,188
2011	137,659	35,226	5,763	7,547	6,983	4,089	20,534	217,801
2012	136,487	36,065	5,633	7,562	6,900	3,948	20,537	217,132
2013	136,154	36,965	5,461	7,445	6,889	3,853	20,788	217,555
2014	136,470	36,745	5,311	7,393	6,801	3,849	20,617	217,186
2015	134,926	37,899	5,174	7,370	6,732	3,800	20,799	216,700

Note:

From FY 1991 to FY1999, figures are the number of facilities subject to Air Pollution Control Law, including ones related to Electricity Business Act and Gas Business Act.

In FY 2000 and onward, figures are number of facilities subject to Air Pollution Control Law (including ones related to Electricity Business Act and Gas Business and Mine Safety Act).

Source: "Survey on the Enforcement of the Air Pollution Control Act," Ministry of the Environment

6.02 Number of facilities emitting soot and smoke by prefecture

(Unit: Number of facilities)

	FY2005	2006	2007	2008	2009	2010	2011	2012	2013	2014	2015
Hokkaido	16,475	16,362	16,516	16,545	16,439	16,440	16,410	16,389	16,245	16,259	16,164
Aomori	3,732	3,635	3,620	3,665	3,557	3,543	3,510	3,530	3,473	3,563	3,566
Iwate	3,182	3,166	3,090	3,203	3,168	3,147	3,214	3,189	3,252	3,025	3,297
Miyagi	4,458	4,331	4,368	4,334	4,310	4,281	4,265	4,294	4,321	4,254	4,273
Akita	2,555	2,573	2,604	2,579	2,608	2,590	2,585	2,642	2,667	2,659	2,647
Yamagata	2,976	2,864	2,873	2,814	2,765	2,754	2,756	2,715	2,746	2,724	2,719
Fukushima	4,683	4,674	4,721	4,716	4,669	4,637	4,628	4,673	4,740	4,569	4,554
Ibaraki	4,369	4,433	4,338	5,936	5,932	6,140	6,363	5,970	5,928	5,900	5,776
Tochigi	4,927	4,953	4,871	4,491	4,472	4,181	4,359	4,353	4,302	4,071	4,511
Gunma	3,995	3,789	3,785	3,781	3,844	3,840	3,970	3,988	3,987	4,013	4,153
Saitama	7,575	7,499	7,451	7,381	7,248	7,155	7,198	7,187	7,197	7,250	7,210
Chiba	7,342	7,488	7,224	7,219	7,220	7,130	7,281	7,182	7,220	7,435	7,174
Tokyo	14,441	14,784	14,324	14,398	14,425	14,106	14,256	14,159	14,387	14,456	14,525
Kanagawa	9,949	10,055	9,942	9,872	9,849	9,711	9,844	9,745	9,840	9,935	9,762
Niigata	5,474	5,403	5,498	5,500	5,465	5,518	5,494	5,650	5,711	5,766	5,778
Toyama	3,062	3,017	3,012	3,048	3,077	3,102	3,100	3,210	3,264	3,156	3,141
Ishikawa	2,849	2,845	2,814	2,793	2,782	2,752	2,715	2,669	2,691	2,660	2,633
Fukui	2,064	2,012	2,037	2,022	1,996	1,983	1,989	1,877	1,811	1,870	1,879
Yamanashi	2,229	2,177	2,132	2,121	2,113	2,107	2,157	2,119	2,098	2,145	2,122
Nagano	5,058	4,937	5,058	5,089	5,071	5,058	5,046	5,065	5,109	5,195	5,155
Gifu	4,096	4,028	4,084	4,097	4,077	4,065	4,282	4,337	4,306	4,248	4,273
Shizuoka	7,517	7,585	7,963	7,903	7,714	7,650	7,554	7,504	7,474	7,463	7,411
Aichi	14,634	14,541	14,678	14,653	14,622	14,279	14,176	14,063	14,034	14,122	14,118
Mie	4,626	4,759	4,550	4,608	4,595	4,590	4,564	4,525	4,486	4,346	4,325
Shiga	3,625	3,457	3,486	3,579	3,258	3,279	3,225	3,233	3,292	3,325	3,295
Kyoto	4,483	4,438	4,451	4,335	4,269	4,215	4,130	3,948	3,939	3,976	3,942
Osaka	13,219	13,441	13,310	13,439	13,452	13,279	13,218	13,161	13,193	13,327	13,230
Hyogo	9,382	9,486	9,618	9,723	9,647	9,499	9,517	9,517	9,424	9,379	9,354
Nara	1,697	1,676	1,691	1,702	1,718	1,719	1,722	1,713	1,732	1,759	1,775
Wakayama	1,726	1,712	1,724	1,740	1,726	1,736	1,669	1,665	1,701	1,774	1,747
Tottori	1,080	1,063	1,079	1,073	1,070	1,055	1,052	1,067	1,063	1,081	1,070
Shimane	1,344	1,514	1,566	1,565	1,523	1,594	1,641	1,640	1,668	1,705	1,713
Okayama	3,751	3,964	3,916	4,000	4,082	4,032	4,036	4,019	3,904	3,903	3,493
Hiroshima	4,866	4,850	4,829	4,783	4,773	4,735	4,689	4,657	4,647	4,646	4,586
Yamaguchi	3,304	3,351	3,347	3,338	3,317	3,323	3,296	3,273	3,307	3,223	3,277
Tokushima	1,567	1,461	1,489	1,493	1,497	1,503	1,521	1,512	1,515	1,510	1,514
Kagawa	2,203	2,170	2,144	2,135	2,003	2,026	1,956	2,036	1,999	1,997	2,016
Ehime	2,396	2,563	2,534	2,515	2,498	2,510	2,391	2,485	2,450	2,437	2,434
Kochi	1,097	1,097	1,123	1,097	1,115	1,128	1,138	1,157	1,165	1,188	1,193
Fukuoka	7,063	6,845	6,824	6,848	6,933	6,906	6,868	6,964	7,030	6,729	6,723
Saga	1,365	1,363	1,340	1,341	1,341	1,312	1,313	1,323	1,339	1,351	1,338
Nagasaki	1,796	1,821	1,808	1,880	1,882	1,876	1,911	1,891	1,921	1,923	1,935
Kumamoto	2,892	2,747	2,810	2,876	2,768	2,800	2,853	2,837	2,891	2,733	2,737
Oita	1,798	1,833	1,885	1,877	1,861	1,890	1,891	1,902	1,887	1,896	1,899
Miyazaki	1,642	1,671	1,688	1,698	1,680	1,692	1,711	1,724	1,741	1,783	1,773
Kagoshima	2,811	2,720	2,735	2,730	2,754	2,759	2,774	2,783	2,813	2,845	2,845
Okinawa	1,387	1,401	1,438	1,473	1,510	1,542	1,563	1,590	1,645	1,612	1,645
Nationwide	218,702	218,514	218,388	220,008	218,695	217,169	217,801	217,132	217,555	217,186	216,700

Note:

In FY2000 and onward, data were taken from facilities subject to Air Pollution Control Law (including ones related to Electricity Business Act, Gas Business Act and Mine Safety Act).

Source: "Survey on the Enforcement of the Air Pollution Control Act," Ministry of the Environment

6.03 Changes in of particulate-discharging facilities (Ordinary particulate/specified particulates)

（Unit: Number of facilities）

	Ordinary-particulate discharging facilities						Specified-particulate discharging facilities							
	Conveyor	Crusher/ Gridding mill	Accumulation on the grounds	Sieve	Coke oven	Total	Grinder	Cutting machine	Mixer	Press	Cutting machine	Crusher/ Gridding mill	Others	Total
FY1990	29,054	8,412	8,351	4,586	97	50,500	622	571	428	279	274	171	324	2,669
1991	30,828	8,706	8,532	4,770	107	52,943	627	560	406	268	260	159	313	2,593
1992	31,839	8,930	8,641	4,972	111	54,493	638	534	364	250	225	145	301	2,457
1993	32,345	9,151	8,770	5,075	107	55,448	602	520	352	256	221	142	253	2,346
1994	33,244	9,379	8,945	5,223	109	56,900	574	505	324	248	218	139	244	2,252
1995	33,872	9,569	9,032	5,328	108	57,909	555	495	311	249	216	131	229	2,186
1996	34,430	9,763	9,209	5,476	107	58,985	551	490	296	233	207	143	221	2,141
1997	34,818	9,782	9,269	5,533	100	59,502	558	467	303	237	194	136	224	2,119
1998	35,419	9,905	9,516	5,661	106	60,607	549	431	280	232	164	134	216	2,006
1999	34,973	9,962	9,539	5,676	99	60,249	507	414	262	223	157	133	203	1,899
2000	36,234	10,306	9,852	5,884	93	62,369	315	375	207	205	136	117	201	1,556
2001	36,847	10,465	10,217	6,009	95	63,633	199	340	157	164	107	99	170	1,236
2002	37,400	10,651	10,261	6,110	92	64,514	174	303	143	151	99	90	177	1,137
2003	37,885	10,726	10,464	6,267	95	65,437	119	250	123	137	78	72	150	929
2004	37,666	10,746	10,728	6,321	95	65,556	68	145	66	103	46	33	94	555
2005	37,536	10,764	10,770	6,439	101	65,610	4	16	2	61	0	0	11	94
2006	37,823	10,758	10,946	6,506	101	66,134	0	5	0	1	0	0	0	6
2007	38,521	10,611	10,988	6,378	96	66,594	0	0	0	0	0	0	0	0
2008	38,935	10,596	11,126	6,528	97	67,282	0	0	0	0	0	0	0	0
2009	39,346	11,268	10,659	6,644	85	68,002	0	0	0	0	0	0	0	0
2010	39,296	10,476	11,383	6,614	86	67,855	0	0	0	0	0	0	0	0
2011	39,536	10,353	11,408	6,582	85	67,964	0	0	0	0	0	0	0	0
2012	40,290	10,382	11,607	6,691	78	69,048	0	0	0	0	0	0	0	0
2013	40,512	10,366	11,694	6,674	95	69,341	0	0	0	0	0	0	0	0
2014	41,179	10,304	11,834	6,671	96	70,084	0	0	0	0	0	0	0	0
2015	40,690	10,130	11,923	6,557	88	69,388	0	0	0	0	0	0	0	0

Note:
In 1990, the number of ordinary-particulate discharging facilities is that of facilities subject to Air Pollution Control Law, from 1991 to 1999, ones subject to Air Pollution Control Law including the ones subject to Electricity Business Act and Gas Business Act, since 2000, those and the ones subject to Mine Safety Act.

Source: "Survey on the Enforcement of the Air Pollution Control Law," Ministry of the Environment

6.04 Prefectural number of facilities discharging ordinary particulates

(Unit: Number of facilities)

	FY2005	2006	2007	2008	2009	2010	2011	2012	2013	2014	2015
Hokkaido	4,445	4,511	4,545	4,550	4,529	4,498	4,356	4,344	4,270	4,280	4,199
Aomori	1,274	1,438	1,557	1,577	1,687	1,685	1,694	1,699	1,675	1,643	1,632
Iwate	1,415	1,425	1,213	1,408	1,514	1,513	1,529	1,535	1,557	1,485	1,591
Miyagi	703	694	685	676	651	674	810	977	691	731	706
Akita	683	675	676	655	688	615	550	569	522	526	527
Yamagata	763	780	775	761	736	705	667	660	663	675	666
Fukushima	1,642	1,614	1,519	1,586	1,582	1,647	1,664	1,660	1,781	1,737	1,728
Ibaraki	2,593	2,643	2,687	2,537	2,465	2,378	2,401	2,435	2,449	2,427	2,391
Tochigi	1,481	1,523	1,534	1,624	2,543	2,508	2,520	2,517	2,526	2,569	2,590
Gunma	599	613	611	619	631	569	524	626	664	671	670
Saitama	1,351	1,323	1,348	1,347	1,369	1,435	1,452	1,461	1,481	1,443	1,425
Chiba	1,387	1,478	1,924	1,921	1,923	1,949	1,999	1,979	2,029	2,127	2,116
Tokyo	1,576	1,521	1,463	1,431	1,446	1,453	1,458	1,469	1,490	1,493	1,531
Kanagawa	1,971	1,948	1,947	1,946	1,938	1,946	1,975	1,971	1,981	1,990	1,947
Niigata	827	830	814	760	759	816	798	829	822	828	829
Toyama	1,088	1,086	1,086	1,120	1,141	1,151	1,154	1,160	1,164	1,177	1,197
Ishikawa	684	668	686	692	709	705	703	707	692	691	693
Fukui	618	627	604	563	543	541	513	476	456	481	504
Yamanashi	571	564	557	578	592	590	562	585	597	596	609
Nagano	1,438	1,467	1,425	1,439	1,422	1,353	1,373	1,380	1,388	1,393	1,355
Gifu	741	762	778	792	807	817	821	819	823	840	866
Shizuoka	927	950	930	919	921	894	968	948	1,004	1,038	1,067
Aichi	4,136	4,206	4,377	4,342	4,411	4,470	4,522	4,625	4,533	4,670	4,714
Mie	1,548	1,568	1,572	1,588	1,613	1,686	1,716	1,734	1,745	1,704	1,695
Shiga	572	598	442	519	500	489	482	485	492	499	496
Kyoto	523	547	550	575	585	596	582	588	607	709	712
Osaka	1,500	1,240	1,261	1,284	1,235	1,239	1,199	1,406	1,403	1,584	1,590
Hyogo	5,138	5,136	5,099	5,200	5,223	5,204	5,119	5,249	5,117	4,993	4,937
Nara	209	209	209	225	229	231	295	298	304	305	312
Wakayama	1,473	1,414	1,486	1,554	1,479	1,427	1,472	1,475	1,501	1,499	1,506
Tottori	209	216	236	263	264	269	264	422	386	393	396
Shimane	610	631	634	632	640	588	582	608	613	606	601
Okayama	2,290	2,337	2,403	2,444	2,446	2,487	2,482	2,493	2,597	2,632	2,637
Hiroshima	2,507	2,530	2,452	2,501	2,485	2,394	2,438	2,397	2,970	3,010	2,991
Yamaguchi	1,675	1,723	1,633	1,716	1,761	1,769	1,733	1,773	1,786	2,091	2,112
Tokushima	688	730	740	746	743	728	738	743	742	714	751
Kagawa	924	929	1,001	1,007	958	963	966	946	941	953	991
Ehime	1,048	1,174	1,189	1,178	1,182	1,109	1,151	1,119	1,085	1,065	1,065
Kochi	498	502	538	538	536	808	784	780	746	760	757
Fukuoka	3,925	3,883	3,893	3,867	3,937	3,673	3,666	3,654	3,686	3,688	3,637
Saga	510	526	526	513	515	491	496	494	487	454	425
Nagasaki	1,035	1,039	1,011	1,009	832	988	931	1,047	982	999	1,001
Kumamoto	893	907	943	1,009	771	792	791	805	796	813	808
Oita	2,677	2,689	2,749	2,736	2,753	2,725	2,750	2,727	2,758	2,758	2,049
Miyazaki	734	729	737	747	706	678	691	706	663	668	675
Kagoshima	1,173	1,186	1,194	1,220	1,216	1,216	1,224	1,215	1,192	1,173	1,166
Okinawa	338	345	355	368	386	393	399	453	484	503	525
Nationwide	65,610	66,134	66,594	67,282	68,002	67,855	67,964	69,048	69,341	70,084	69,388

Note:
In FY 2000 and onward, figures are the number of facilities subject to Air Pollution Control Law (including ones related to Electricity Business Act, Gas Business Act and Mine Safety Act).

Source: "Survey on the Enforcement of the Air Pollution Control Law," Ministry of the Environment

6.05 Air pollutant emissions (from Stationary sources)

（Unit: t）

	SOx emission	NOx emission	Soot and dust emission
FY 1978	1,315,637	870,924	—
1979	1,248,037	843,572	—
1980	1,157,837	818,667	—
1981	1,040,954	763,220	—
1982	956,666	717,469	—
1983	917,960	720,648	132,999
1984	853,700	721,802	—
1985	795,457	699,428	—
1986	684,497	661,622	100,550
1987	597,480	685,550	97,817
1988	580,757	703,905	93,796
1989	676,863	777,230	107,094
1990	614,866	778,977	96,945
1991	624,154	812,473	90,922
1992	694,689	832,655	102,989
1993	642,966	788,235	99,186
1994	676,351	819,860	108,230
1995	708,135	877,662	101,763
1996	659,743	855,787	94,606
1999	629,206	837,260	75,086
2002	595,506	869,113	60,738
2005	566,773	890,188	57,976
2008	505,590	731,094	47,660
2011	410,979	696,404	36,529
2014	406,735	631,149	35,986

Notes:

・The gray-shadowed figures for FY 1987 and FY 1988, data for FY 1990, FY 1991, FY 1993 and FY 1994 are taken from the result of a sample survey.

・No surveys were conducted in FY 1997, FY 1998, FY 2000, FY 2001, FY 2003, FY 2004, FY 2006, FY 2007, FY 2009 , FY2010 , FY2012, and FY2013.

Source: "Survey on the Enforcement of the Air Pollution Control Law," Ministry of the Environment

6.06 Sulfur oxide emissions (breakdown by type of facility)

（Unit：km^2 N / Year）

	Apparatus exhausting soot and smoke							
	Boiler 01	Diesel engine 30	Waste incinerator 13	Metal-heating furnace 06	Drying furnace 11	Metal-melting furnace 05	Others	Total
FY 1992	171,472	11,590	13,917	3,026	4,129	2,639	36,368	243,141
1993	150,188	10,305	14,574	2,913	3,693	2,450	40,915	225,038
1994	157,992	12,225	15,433	3,041	3,354	2,293	42,385	236,723
1995	165,252	13,146	18,987	3,059	3,585	2,048	41,770	247,847
1996	160,402	13,008	12,513	2,844	4,519	1,894	35,730	230,910
1999	145,848	12,509	13,397	2,050	5,341	1,511	39,567	220,223
2002	136,744	15,076	8,162	1,970	3,035	3,208	40,232	208,427
2005	130,696	14,159	10,963	2,095	3,358	2,306	34,793	198,370
2008	120,700	12,864	5,509	1,413	2,888	2,356	31,226	176,956
2011	100,786	7,906	4,163	1,594	1,984	664	26,746	143,843
2014	99,033	5,476	4,457	912	1,676	571	30,232	142,357

Notes:
・The gray-shadowed figures for FY 1994 were results of a sample survey.
・No surveys were conducted in FY1997, FY1998, FY 2000, FY 2001, FY 2003, FY 2004, FY2006, FY2007, FY2009, FY2010, FY2012, and FY2013.

Source: "Survey on the Enforcement of the Air Pollution Control Law," Ministry of the Environment

6.07 Nitrogen oxide emissions (breakdown by type of facility)

（Unit：km^2 N / Year）

	Apparatus exhausting soot and smoke							
	Boiler 01	Diesel engine 30	Waste incinerator 13	Metal-heating furnace 06	Drying furnace 11	Metal-melting furnace 05	Others	Total
FY 1992	178,664	46,517	27,388	6,616	4,738	1,446	140,097	405,466
1993	162,873	42,550	27,306	6,227	3,923	1,266	139,691	383,836
1994	170,399	50,249	28,358	6,629	3,605	1,101	138,895	399,236
1995	171,148	56,881	33,630	6,418	4,359	1,289	153,658	427,383
1996	176,218	55,494	30,488	6,499	4,631	1,191	142,210	416,731
1999	171,696	59,823	33,321	6,312	5,805	1,573	129,179	407,709
2002	179,687	78,613	29,522	6,747	5,236	3,473	119,942	423,220
2005	177,218	80,612	29,842	6,556	5,168	3,342	130,745	433,483
2008	158,760	36,984	25,373	5,878	3,825	3,323	121,868	356,011
2011	158,112	32,379	22,552	6,491	3,567	1,960	114,057	339,118
2014	143,121	22,983	23,526	4,914	3,578	1,689	107,531	307,342

Note:
・The gray-shadowed figures for FY 1994 were results of a sample survey.
・No surveys were conducted in for FY1997, FY1998, FY 2000, FY 2001, FY 2003, FY 2004, FY2006, FY2007, FY2009, FY2010, FY2012, and FY2013.

Source: "Survey on the Enforcement of the Air Pollution Control Law," Ministry of the Environment

6.08 Soot and dust emissions (breakdown by type of facility)

（Unit: t / Year）

	Apparatus exhausting soot and smoke							
	Boiler 01	Diesel engine 30	Waste incinerator 13	Metal-heating furnace 06	Drying furnace 11	Metal-melting furnace 05	Others	Total
FY 1992	45,202	11,578	18,281	1,201	6,233	1,568	18,925	102,988
1993	42,229	11,078	17,612	1,180	5,545	1,752	19,790	99,186
1994	49,040	13,340	17,640	1,582	5,279	1,833	19,606	108,320
1995	42,314	11,934	19,597	1,153	4,399	912	21,454	101,763
1996	39,692	9,607	17,398	882	4,795	935	21,297	94,606
1999	30,101	2,747	16,119	838	4,174	987	20,120	75,086
2002	28,313	5,121	6,141	833	4,471	1,352	14,507	60,738
2005	26,368	3,079	4,842	844	5,144	1,558	16,141	57,976
2008	21,235	1,718	3,391	731	3,913	1,232	15,440	47,660
2011	16,181	1,365	2,621	911	2,694	993	11,764	36,529
2014	17,321	1,255	2,775	395	3,223	962	10,055	35,986

Notes:
・The gray-shadowed figures for FY 1994 were results of a sample survey.
・No surveys were conducted in for FY1997, FY1998, FY 2000, FY 2001, FY 2003, FY 2004, FY2006, FY2007, FY2009, FY2010, FY2012, and FY2013.

Source: "Survey on the Enforcement of the Air Pollution Control Law" Ministry of the Environment

6.09 Changes in car ownership (1)

（Unit: Vehicle）

End of fiscal year	(A) # of cars owned (C)+(D)+(E)	(B) # of inspected vehicles (C)+(D)	(C) # of registered vehicle			Breakdown of registered vehicles		
						Trucks		
			Business use total [ratio]	Private use total [ratio]	Total	Business use total	Private use total	Total
1985	48,240,555	36,178,795	1,149,933 [3%]	34,178,247 [97%]	35,328,180	703,594 (216)	7,602,424 (3,667)	8,306,018
1990	60,498,850	43,730,305	1,409,087 [3%]	41,321,364 [97%]	42,730,451	907,931 (136)	7,926,610 (1,929)	8,834,541
1993	66,278,836	48,130,439	1,499,131 [3%]	45,503,491 [97%]	47,002,622	974,513 (118)	7,904,406 (1,465)	8,878,919
1994	68,103,696	49,485,297	1,544,750 [3%]	46,763,318 [97%]	48,308,068	1,011,410 (114)	7,867,542 (1,393)	8,878,952
1995	70,106,536	50,936,863	1,589,809 [3%]	48,138,041 [97%]	49,727,850	1,047,272 (112)	7,810,558 (1,336)	8,857,830
1996	71,775,647	52,191,692	1,632,037 [3%]	49,334,880 [97%]	50,966,917	1,078,098 (112)	7,740,808 (1,275)	8,818,906
1997	72,856,583	52,980,674	1,660,534 [3%]	50,076,863 [97%]	51,737,397	1,094,365 (112)	7,598,844 (1,232)	8,693,209
1998	73,688,389	53,390,661	1,660,872 [3%]	50,460,557 [97%]	52,121,429	1,087,740 (111)	7,388,555 (1,182)	8,476,295
1999	74,582,612	53,552,803	1,672,921 [3%]	50,591,483 [97%]	52,264,404	1,091,259 (111)	7,174,875 (1,142)	8,266,134
2000	75,524,973	53,769,633	1,698,361 [3%]	50,762,855 [97%]	52,461,216	1,105,336 (99)	7,000,950 (1,117)	8,106,286
2001	76,270,813	53,757,576	1,706,272 [3%]	50,716,950 [97%]	52,423,222	1,101,591 (99)	6,805,282 (1,074)	7,906,873
2002	76,892,517	53,626,388	1,711,672 [3%]	50,682,517 [97%]	52,274,189	1,095,317 (98)	6,570,625 (1,050)	7,885,842
2003	77,390,245	53,314,815	1,725,027 [3%]	50,219,457 [97%]	51,944,484	1,097,103 (98)	6,317,232 (1,012)	7,414,335
2004	78,278,880	53,328,755	1,756,559 [3%]	50,174,804 [97%]	51,931,363	1,114,859 (98)	6,165,316 (992)	7,280,175
2005	78,992,060	53,185,519	1,778,369 [3%]	49,979,001 [97%]	51,757,370	1,125,963 (98)	6,033,733 (985)	7,159,696
2006	79,236,095	52,527,928	1,790,317 [4%]	49,284,718 [96%]	51,075,035	1,131,923 (98)	5,882,335 (976)	7,014,258
2007	79,080,762	51,640,443	1,795,399 [4%]	48,366,320 [96%]	50,161,719	1,134,930 (99)	5,748,760 (972)	6,883,690
2008	78,800,542	50,629,754	1,768,074 [4%]	47,356,376 [96%]	49,124,450	1,110,918 (100)	5,456,584 (962)	6,567,502
2009	78,693,495	50,045,805	1,734,643 [4%]	46,786,986 [96%]	48,521,629	1,082,614 (100)	5,279,820 (960)	6,362,434
2010	78,660,773	49,610,327	1,715,809 [4%]	46,359,337 [96%]	48,075,146	1,075,968 (100)	5,138,879 (949)	6,214,847
2011	79,112,584	49,543,611	1,711,587 [4%]	46,289,168 [96%]	48,000,755	1,074,412 (101)	5,061,501 (938)	6,135,913
2012	79,625,203	49,371,229	1,711,199 [4%]	46,093,689 [96%]	47,804,888	1,073,190 (101)	4,994,948 (935)	6,068,138
2013	80,272,571	49,197,590	1,721,239 [4%]	45,881,016 [96%]	47,602,255	1,080,442 (47)	4,960,643 (757)	6,041,085
2014	80,670,393	48,884,185	1,729,151 [4%]	45,543,945 [96%]	47,273,096	1,086,370 (47)	4,942,786 (749)	6,029,156
2015	80,900,730	48,773,121	1,745,243 [4%]	45,399,417 [96%]	47,144,660	1,097,032 (97)	4,921,799 (922)	6,018,831
Relative change from last year (%)	100.3	99.8	100.9	99.7	99.7	101.0	99.6	99.8

Note: Parenthesized numbers refer to the number of three - wheelers and are included in each total.

6.09 Changes in car ownership (2)

（Unit: Vehicle）

End of fiscal year	Breakdown of registered vehicles										
	Trucks										
	Standard-sized car			Compact car					Trailers		
	Business use	Private use	Total	Business use		Private use		Total	Business use	Private use	Total
1985	550,059	1,123,089	1,673,148	93,823	(216)	6,473,179	(3,667)	6,567,002	59,712	6,156	65,868
1990	731,920	1,474,161	2,206,081	93,737	(136)	6,445,958	(1,929)	6,539,695	82,274	6,491	88,765
1993	792,052	1,640,224	2,432,276	89,354	(118)	6,257,273	(1,465)	6,346,627	93,107	6,909	100,016
1994	821,914	1,697,138	2,519,052	87,354	(114)	6,161,944	(1,393)	6,249,298	102,142	8,460	110,602
1995	849,427	1,734,729	2,584,156	85,973	(112)	6,066,652	(1,336)	6,152,625	111,872	9,177	121,049
1996	877,390	1,764,876	2,642,266	84,760	(112)	5,966,628	(1,275)	6,051,388	115,948	9,304	125,252
1997	891,734	1,763,933	2,655,667	83,617	(112)	5,825,481	(1,232)	5,909,098	119,014	9,430	128,444
1998	886,331	1,739,844	2,626,175	81,479	(111)	5,639,082	(1,182)	5,720,561	119,930	9,629	129,559
1999	889,604	1,704,931	2,594,535	79,883	(111)	5,460,470	(1,142)	5,540,353	121,772	9,474	131,246
2000	901,104	1,680,488	2,581,592	79,496	(99)	5,311,156	(1,117)	5,390,652	124,736	9,306	134,042
2001	897,530	1,656,668	2,554,198	78,183	(99)	5,139,380	(1,074)	5,217,563	125,878	9,234	135,112
2002	891,407	1,621,103	2,512,510	78,680	(98)	4,940,538	(1,050)	5,017,216	127,230	8,986	136,216
2003	892,082	1,579,219	2,471,301	75,553	(98)	4,729,227	(1,012)	4,804,780	129,468	8,786	138,254
2004	904,389	1,567,205	2,471,594	76,016	(98)	4,589,205	(992)	4,665,221	134,454	8,906	143,360
2005	909,871	1,558,569	2,468,440	76,877	(98)	4,465,748	(985)	4,542,625	139,215	9,416	148,631
2006	912,142	1,551,465	2,463,607	77,085	(98)	4,321,351	(976)	4,398,436	142,696	9,519	152,215
2007	911,457	1,533,807	2,445,264	77,896	(99)	4,205,417	(972)	4,283,313	146,181	9,536	155,717
2008	887,345	1,472,858	2,360,203	77,626	(100)	3,974,423	(962)	4,052,049	145,947	9,303	155,250
2009	863,399	1,440,170	2,303,569	76,432	(100)	3,830,428	(960)	3,906,860	142,783	9,222	152,005
2010	856,599	1,415,352	2,271,951	75,646	(100)	3,714,240	(949)	3,789,886	143,723	9,287	153,010
2011	854,516	1,408,991	2,263,507	74,811	(101)	3,642,980	(938)	3,717,791	145,085	9,530	154,615
2012	852,748	1,409,844	2,262,592	74,381	(101)	3,575,280	(935)	3,649,661	146,061	9,824	155,885
2013	859,534	1,418,602	2,278,136	73,376	(47)	3,531,802	(757)	3,605,178	147,532	10,239	157,771
2014	864,000	1,435,643	2,299,643	72,846	(47)	3,496,353	(749)	3,569,199	149,524	10,790	160,314
2015	872,863	1,444,268	2,317,131	72,581	(97)	3,466,101	(922)	3,538,682	151,588	11,430	163,018
Relative change from last year (%)	101.0	100.6	100.8	99.1		99.1		99.1	101.4	105.9	101.7

Note: Parenthesized numbers refer to the number of three - wheelers and are included in each total.

6.09 Changes in car ownership (3)

（Unit: Vehicle）

The end of fiscal year.	Breakdown of registered vehicles								
	Buses								
	Business use total	Private use total	Total	Standard-size car			Compact car		
				Business use	Private use	Total	Business use	Private use	Total
1985	90,100	140,683	230,783	84,660	24,420	109,080	5,440	116,263	121,703
1990	94,830	151,014	245,844	86,966	28,137	115,103	7,864	122,877	130,741
1993	96,200	150,919	247,119	87,064	29,425	116,489	9,136	121,494	130,630
1994	95,762	148,849	244,611	86,269	29,304	115,573	9,493	119,545	129,038
1995	95,218	147,689	242,907	85,236	29,160	114,396	9,982	118,529	128,511
1996	94,975	146,869	241,844	84,387	29,042	113,429	10,588	117,827	128,415
1997	95,681	144,185	239,866	83,873	28,667	112,540	11,808	115,518	127,326
1998	95,934	141,212	237,146	82,970	28,214	111,184	12,964	112,998	125,962
1999	96,350	139,375	235,725	82,341	27,929	110,270	14,009	111,446	125,455
2000	98,548	137,002	235,550	82,827	27,458	110,285	15,721	109,544	125,265
2001	100,534	133,710	234,244	83,469	26,757	110,226	17,065	106,953	124,018
2002	101,801	131,379	233,180	83,998	28,210	110,208	17,803	105,189	122,972
2003	103,093	128,891	231,984	84,485	25,634	110,119	18,608	103,257	121,865
2004	104,898	127,102	232,000	85,167	25,105	110,272	19,731	101,997	121,728
2005	105,770	125,926	231,696	85,120	24,722	109,842	20,650	101,204	121,854
2006	106,974	124,784	231,758	85,522	24,402	109,924	21,452	100,382	121,834
2007	107,771	123,210	230,981	85,774	24,006	109,780	21,997	99,204	121,201
2008	108,103	121,701	229,804	85,771	23,668	109,439	22,332	98,033	120,365
2009	107,876	120,419	228,295	85,242	23,285	108,527	22,634	97,134	119,768
2010	108,228	118,611	226,839	85,146	22,704	107,850	23,082	95,907	118,989
2011	108,544	117,726	226,270	85,232	22,466	107,698	23,312	95,260	118,572
2012	109,036	117,011	226,047	85,368	22,168	107,536	23,668	94,843	118,511
2013	110,208	116,334	226,542	86,334	21,890	108,224	23,874	94,444	118,318
2014	111,344	116,235	227,579	87,265	21,727	108,992	24,079	94,508	118,587
2015	113,742	116,861	230,603	89,135	21,704	110,839	24,607	95,157	119,764
Relative change from last year (%)	102.2	100.5	101.3	102.1	99.9	101.7	102.2	100.7	101.0

Source: Compiled from 'Statistical Report on Motor Vehicle Transport,' Ministry of Land, Infrastructure, Transport and Tourism

6.09 Changes in car ownership (4)

（Unit: Vehicle）

End of fiscal year	Breakdown of registered vehicles														
	Passenger car														
	Business use total		Private use total		Total	Standard car			Compact car						
						Business use	Private use	Total	Business use		Private use		Total
1985	252,641	(-)	25,594,937	(21)	25,847,578	2,322	712,394	714,716	250,319	(-)	24,882,543	(21)	25,132,862
1990	259,589	(-)	32,176,908	(43)	32,436,497	7,364	1,926,169	1,933,533	252,225	(-)	30,250,739	(43)	30,502,964
1993	258,786	(-)	36,250,056	(88)	36,508,842	15,278	5,237,128	5,252,406	243,508	(-)	31,012,928	(88)	31,256,436
1994	256,875	(-)	37,497,646	(152)	37,754,521	17,332	6,697,684	6,715,016	239,543	(-)	30,799,962	(152)	31,039,505
1995	255,984	(-)	38,846,724	(234)	39,102,708	20,008	8,283,402	8,303,410	235,976	(-)	30,563,322	(234)	30,799,298
1996	256,403	(-)	40,220,165	(373)	40,476,568	23,029	9,949,956	9,972,985	233,374	(-)	30,270,209	(373)	30,503,583
1997	258,475	(-)	41,024,518	(492)	41,282,993	22,978	11,279,648	11,305,626	232,497	(-)	29,744,870	(492)	29,977,367
1998	257,780	(-)	41,525,096	(607)	41,782,876	27,494	12,299,442	12,326,936	230,286	(-)	29,225,654	(607)	29,455,940
1999	257,088	(-)	41,798,617	(710)	42,055,705	29,440	13,204,291	13,233,731	227,648	(-)	28,594,326	(710)	28,821,974
2000	256,343	(-)	42,108,726	(701)	42,365,069	31,046	14,132,311	14,163,357	225,297	(-)	27,976,415	(701)	28,201,712
2001	259,033	(-)	42,268,699	(688)	42,527,732	32,691	14,905,895	14,938,586	226,342	(-)	27,362,804	(688)	27,589,146
2002	263,282	(-)	42,391,647	(660)	42,664,929	34,804	15,398,886	15,433,690	228,478	(-)	28,992,761	(660)	27,221,239
2003	267,141	(-)	42,357,065	(639)	42,624,206	36,423	15,916,537	15,953,960	230,718	(-)	26,440,528	(639)	26,671,246
2004	270,703	(-)	42,505,475	(625)	42,776,178	38,413	16,357,803	16,396,216	232,290	(-)	26,147,672	(625)	26,379,962
2005	273,181	(-)	42,474,099	(599)	42,747,280	40,182	16,596,514	16,636,696	232,999	(-)	25,877,585	(599)	26,110,584
2006	273,740	(-)	41,955,669	(570)	42,229,409	42,061	16,671,316	16,713,377	231,679	(-)	25,284,353	(570)	25,516,032
2007	273,529	(-)	41,195,460	(542)	41,468,989	43,585	16,714,242	16,757,827	229,944	(-)	24,481,218	(542)	24,711,162
2008	271,327	(-)	40,527,918	(535)	40,799,245	45,050	16,613,720	16,658,770	226,277	(-)	23,914,198	(535)	24,140,475
2009	265,431	(-)	40,153,489	(535)	40,418,920	46,399	16,652,554	16,698,953	219,032	(-)	23,500,935	(535)	23,719,967
2010	249,934	(-)	39,885,198	(540)	40,135,132	47,850	16,790,700	16,838,550	202,084	(-)	23,094,498	(540)	23,296,582
2011	244,643	(-)	39,898,798	(537)	40,143,441	49,179	17,048,886	17,098,065	195,464	(-)	22,849,912	(537)	23,045,376
2012	241,431	(-)	39,767,919	(541)	40,009,350	50,989	17,246,034	17,297,023	190,442	(-)	22,521,885	(541)	22,712,327
2013	238,891	(-)	39,582,152	(540)	39,821,043	52,961	17,533,167	17,586,128	185,930	(-)	22,048,985	(540)	22,234,915
2014	236,525	(-)	39,254,592	(530)	39,491,117	54,931	17,662,272	17,717,203	181,594	(-)	21,592,320	(530)	21,773,914
2015	234,310	(-)	39,120,335	(530)	39,354,645	56,799	17,944,156	18,000,955	177,511	(-)	21,176,179	(530)	21,353,690
Relative change from last year (%)	99.1		99.7		99.7	103.4	101.6	101.6	97.8		98.1		98.1

Note: Parenthesized numbers refer to the number of three - wheelers and are included in each total.

6.09 Changes in car ownership (5)

(Unit: Vehicle)

End of fiscal year	Breakdown of registered vehicles														
	Specific use vehicles														
	Business use total		Private use total		Total	Standard-sizes car			Compact car						
						Business use	Private use	Total	Business use		Private use				Total
1985	103,598	(-)	840,203	(681)	943,801	95,723	373,113	468,836	4,544	(-)	129,227	(681)			133,771
1990	146,737	(-)	1,066,832	(579)	1,213,569	136,266	494,476	630,742	7,038	(-)	152,982	(579)			160,020
1993	169,632	(-)	1,198,110	(560)	1,367,742	157,465	579,068	736,533	8,609	(-)	158,482	(560)			167,091
1994	180,703	(-)	1,249,281	(562)	1,429,984	168,003	615,206	783,209	9,090	(-)	160,083	(562)			169,173
1995	191,335	(-)	1,333,070	(565)	1,524,405	177,770	680,712	858,482	9,847	(-)	164,583	(565)			174,430
1996	202,561	(-)	1,227,038	(534)	1,429,599	188,293	748,349	936,642	10,473	(-)	172,512	(534)			182,985
1997	212,013	(-)	1,309,316	(511)	1,521,329	197,235	815,033	1,012,268	10,976	(-)	183,119	(511)			194,095
1998	219,418	(-)	1,405,694	(546)	1,625,112	204,305	893,508	1,097,813	11,411	(-)	197,261	(546)			208,672
1999	228,224	(-)	1,478,616	(529)	1,706,840	212,742	956,470	1,169,212	11,832	(-)	204,992	(529)			216,824
2000	238,134	(-)	1,516,177	(493)	1,754,311	222,151	992,452	1,214,603	12,412	(-)	204,147	(493)			216,559
2001	245,114	(-)	1,509,259	(456)	1,754,373	229,060	991,997	1,221,057	12,557	(-)	196,226	(456)			208,783
2002	251,272	(-)	1,468,888	(444)	1,720,138	236,244	963,932	1,199,176	12,617	(-)	184,198	(444)			196,816
2003	257,690	(-)	1,416,269	(415)	1,673,959	241,477	921,766	1,163,243	12,866	(-)	173,689	(415)			186,555
2004	266,099	(-)	1,376,911	(392)	1,643,010	249,654	890,007	1,139,661	13,163	(-)	165,388	(392)			178,551
2005	273,455	(-)	1,345,243	(382)	1,618,698	256,861	863,195	1,120,056	13,382	(-)	159,798	(382)			173,180
2006	277,680	(-)	1,321,930	(369)	1,599,610	260,898	843,235	1,104,133	13,576	(-)	154,946	(369)			168,522
2007	279,169	(-)	1,298,890	(357)	1,578,059	262,415	824,181	1,086,596	13,559	(-)	151,310	(357)			164,869
2008	277,726	(-)	1,250,173	(285)	1,527,899	261,046	786,024	1,047,070	13,509	(-)	141,663	(285)			155,172
2009	278,722	(-)	1,233,258	(273)	1,511,980	262,065	772,381	1,034,446	13,528	(-)	140,301	(273)			153,829
2010	281,679	(-)	1,216,649	(261)	1,498,328	264,923	760,067	1,024,990	13,661	(-)	137,025	(261)			150,686
2011	283,988	(-)	1,211,143	(11,307)	1,495,131	267,221	755,467	1,022,688	13,743	(-)	135,140	(11,307)			148,883
2012	287,542	(-)	1,213,811	(11,924)	1,501,353	270,636	756,436	1,027,072	13,944	(-)	133,881	(11,924)			147,825
2013	291,698	(-)	1,221,887	(12,669)	1,513,585	274,887	760,308	1,035,195	13,897	(-)	133,050	(12,669)			146,947
2014	294,912	(-)	1,230,332	(13,564)	1,525,244	278,058	765,272	1,043,330	13,975	(-)	132,417	(13,564)			146,392
2015	300,159	(-)	1,240,422	(14,601)	1,540,581	283,224	771,104	1,054,328	14,055	(-)	133,034	(14,601)			147,089
Relative change from last year (%)	101.8		100.8		101.0	101.9	100.8	101.1	100.6		100.5				100.5

Note: Parenthesized numbers refer to the number of three - wheelers and are included in each total.

Source: Compiled from "Statistical Report on Motor Vehicle Transport," Ministry of Land, Infrastructure, Transport and Tourism

6.09 Changes in car ownership (6)

（Unit: Vehicle）

End of fiscal year	Breakdown of registered vehicles			(D) Small two-wheeler	(E) Light motor vehicle				
	Specific use vehicles								
	Large-sized special motor vehicle								
	Business use	Private use	Total		Total	Four-wheeler	Four-wheel truck	Three-wheeler	Two -wheeler
1985	3,331	337,863	341,194	850,615	12,061,760	1,942,616	8,944,444	1,233	1,173,467
1990	3,433	419,374	422,807	999,854	16,768,545	2,715,334	12,310,428	1,235	1,741,548
1993	3,558	460,560	464,118	1,127,817	18,148,397	4,551,769	11,772,117	1,295	1,823,216
1994	3,610	473,992	477,602	1,177,229	18,618,399	5,201,818	11,591,832	1,303	1,823,446
1995	3,718	487,775	491,493	1,209,013	19,169,673	5,965,822	11,375,868	1,353	1,826,630
1996	3,795	306,177	309,972	1,224,775	19,583,955	6,738,258	11,037,077	1,363	1,807,257
1997	3,802	311,164	314,966	1,243,277	19,875,909	7,401,213	10,707,664	1,362	1,765,670
1998	3,702	314,925	318,627	1,269,232	20,297,728	8,185,273	10,383,719	1,336	1,727,400
1999	3,650	317,154	320,804	1,288,399	21,029,809	9,166,424	10,157,522	1,341	1,704,522
2000	3,571	319,578	323,149	1,308,417	21,755,340	10,084,285	9,957,111	1,347	1,712,597
2001	3,497	321,036	324,533	1,334,354	22,513,237	10,959,561	9,817,964	1,317	1,734,395
2002	3,411	320,736	324,147	1,362,199	23,288,129	11,816,447	9,675,844	1,293	1,772,545
2003	3,347	320,814	324,161	1,370,331	24,075,430	12,663,918	9,599,623	1,295	1,810,594
2004	3,282	321,516	324,798	1,397,392	24,950,125	13,512,078	9,579,425	1,183	1,857,439
2005	3,212	322,250	325,462	1,428,149	25,806,541	14,350,390	9,546,557	1,192	1,908,402
2006	3,206	323,749	326,955	1,452,893	26,708,149	15,280,951	9,475,481	1,205	1,950,512
2007	3,195	323,399	326,594	1,478,724	27,439,715	16,082,259	9,379,408	1,219	1,976,829
2008	3,171	322,486	325,657	1,505,304	28,170,788	16,883,230	9,290,018	1,229	1,996,311
2009	3,129	320,576	323,705	1,524,176	28,647,690	17,483,915	9,169,591	1,245	1,992,939
2010	3,095	319,557	322,652	1,535,181	29,050,446	18,004,339	8,921,550	1,244	1,975,623
2011	3,024	320,536	323,560	1,542,856	29,568,973	18,585,902	8,871,671	1,237	1,959,845
2012	2,962	323,494	326,456	1,566,341	30,253,974	19,347,873	8,782,302	1,226	1,969,187
2013	2,914	328,529	331,443	1,595,335	31,074,981	20,230,295	8,706,948	1,233	1,980,411
2014	2,879	332,643	335,522	1,611,089	31,786,208	21,026,132	8,622,311	1,234	1,978,462
2015	2,880	336,284	339,164	1,628,461	32,127,609	21,477,247	8,519,233	1,225	1,970,471
Relative change from last year (%)	100.0	101.1	101.1	101.1	101.1	102.1	98.8	99.3	99.6

Note:

Starting FY2010, total number of Light motor vehicle does not include the number of Specific use vehicles; consequently, breakdown totals is not consist with totals.

6.09 Changes in car ownership (7)

Transition of numbers of motorized bicycles and small-sized special motor vehicles; （Unit: Vehicle）

As of April 1st each year	Motorized bicycle					Small-sized special motor vehicles		
	Class 1	Class 2	Total	Ratio of change from last year (%)	Index	Total	Relative change from last year (%)	Index
1989	14,033,811	1,574,741	15,608,552	97	142	2,414,449	99	101
1990	13,539,269	1,517,228	15,056,497	96	137	2,406,252	100	100
1991	13,048,137	1,505,665	14,553,802	97	133	2,398,937	100	100
1992	12,520,835	1,480,476	14,001,311	96	128	2,380,556	99	99
1993	11,998,940	1,461,782	13,460,722	96	123	2,367,290	99	99
1994	11,521,894	1,435,990	12,957,884	96	118	2,342,641	99	98
1995	11,165,390	1,421,031	12,586,421	97	115	2,313,477	99	96
1996	10,835,934	1,390,327	12,226,261	97	111	2,292,441	99	96
1997	10,487,574	1,366,558	11,854,132	97	108	2,470,423	108	103
1998	10,181,449	1,346,116	11,527,565	97	105	2,454,691	99	102
1999	9,919,874	1,341,347	11,261,221	98	103	2,426,401	99	101
2000	9,636,487	1,337,395	10,973,882	97	100	2,399,487	99	100
2001	9,354,554	1,344,330	10,698,884	97	97	2,355,443	98	98
2002	9,136,832	1,334,792	10,471,624	98	95	2,330,893	99	97
2003	8,915,037	1,329,410	10,244,447	98	95	2,309,590	99	96
2004	8,739,686	1,341,088	10,080,774	98	92	2,284,223	99	95
2005	8,566,613	1,353,732	9,920,345	98	90	2,255,513	99	94
2006	8,372,001	1,378,714	9,750,715	98	89	2,240,149	99	93
2007	8,178,879	1,397,085	9,575,964	98	87	2,219,142	99	92
2008	7,963,604	1,429,738	9,393,342	98	86	2,197,386	99	92
2009	7,770,458	1,479,588	9,250,046	98	84	2,171,929	99	91
2010	7,530,672	1,511,440	9,042,112	96	82	2,153,890	99	90
2011	7,238,628	1,540,667	8,779,295	97	80	2,127,238	99	89
2012	6,985,633	1,582,925	8,568,558	98	78	2,114,115	99	88
2013	6,750,431	1,626,094	8,376,525	98	76	2,106,128	99	87
2014	6,528,790	1,674,884	8,203,674	98	74	2,102,642	99	87
2015	6,280,897	1,704,083	7,984,980	97	73	2,094,720	99	87

Notes:

- Class 1 Motorized bicycles refer to ones with engine size of 50 cc and below;
  Class type 2 refer to the ones greater than Class type 1, with engine size of 125 cc and below.
- Figures in the table are for vehicles for which taxes are being paid to municipalities.
- A value in FY2000 is set as 100 for the index.

Source: "Investigation on municipal taxation," Ministry of Internal Affairs and Communications

6.10 Total automobile transportation volume and car ownership by prefecture

	Total automobile transportation volume (FY 2014)						Number of automobiles (at the end of FY 2014)			
	Freight tonnage carried (Thousand tons)			Passenger transportation (thousand people)			Trucks	Buses	Passenger cars	Total
	Business use	Personal use	Total	Buses	Passenger cars	Total				
Nationwide	2,912,693	1,381,477	4,294,170	4,500,163	1,557,269	6,057,432	6,029,156	227,579	39,491,117	47,273,096
Hokkaido	254,540	51,942	306,482	200,043	107,910	307,953	392,131	13,788	1,917,714	2,456,556
Aomori	37,617	28,157	65,774	30,388	16,147	46,535	83,089	3,820	412,017	527,740
Iwate	40,024	29,736	69,760	27,384	13,537	40,921	84,438	3,705	428,155	539,617
Miyagi	76,583	44,514	121,097	77,407	28,436	105,843	142,177	5,075	828,643	1,007,089
Akita	24,384	17,414	41,798	14,124	8,375	22,499	52,791	2,431	352,905	428,747
Yamagata	27,392	20,456	47,848	11,800	7,882	19,682	64,069	2,580	411,246	498,738
Fukushima	62,197	42,063	104,260	26,181	14,847	41,028	131,451	5,470	769,087	937,931
Ibaraki	70,272	55,746	126,018	49,561	18,558	68,119	217,310	6,949	1,320,782	1,589,071
Tochigi	39,692	35,210	74,902	24,545	12,413	36,958	128,994	4,601	895,217	1,056,447
Gunma	41,671	35,904	77,575	14,487	10,649	25,136	130,342	3,967	883,057	1,045,504
Saitama	136,105	71,477	207,582	227,228	38,575	265,803	304,257	9,937	2,226,650	2,612,110
Chiba	98,108	69,230	167,338	247,228	44,888	292,116	283,342	11,001	1,981,288	2,345,704
Tokyo	114,268	67,977	182,245	821,421	329,842	1,151,263	390,252	15,484	2,664,688	3,160,166
Kanagawa	125,578	56,113	181,691	671,914	112,176	784,090	280,968	11,530	2,407,616	2,772,338
Niigata	59,165	35,444	94,609	49,440	17,656	67,096	138,125	6,257	789,391	975,219
Toyama	32,934	16,564	49,498	11,983	5,944	17,927	65,244	2,078	432,647	518,297
Ishikawa	32,076	14,907	46,983	33,974	11,729	45,703	63,222	2,729	448,046	530,603
Fukui	20,405	12,520	32,925	10,973	5,815	16,788	44,647	1,885	304,290	364,626
Yamanashi	12,494	13,380	25,874	9,997	6,287	16,284	46,347	2,125	333,015	395,564
Nagano	42,332	34,571	76,903	27,566	16,069	43,635	119,367	5,576	814,260	971,006
Gifu	48,139	38,751	86,890	31,986	12,154	44,140	129,976	4,594	811,443	975,411
Shizuoka	101,891	55,634	157,525	87,713	27,790	115,503	218,899	6,503	1,351,839	1,619,422
Aichi	194,261	85,582	279,843	194,138	62,794	256,932	412,868	10,143	2,876,076	3,377,217
Mie	53,815	26,929	80,744	44,280	7,543	51,823	99,198	3,401	695,954	822,865
Shiga	26,752	15,097	41,849	24,845	9,533	34,378	60,629	2,675	460,917	539,730
Kyoto	45,444	18,795	64,239	180,264	62,712	242,976	89,694	4,724	655,668	774,077
Osaka	168,212	51,090	219,302	285,961	116,898	402,859	318,067	9,682	1,978,685	2,374,949
Hyogo	163,219	45,672	208,891	254,354	55,852	310,206	192,507	7,816	1,552,301	1,805,916
Nara	22,128	11,293	33,421	53,087	8,439	61,526	47,961	2,173	403,108	465,275
Wakayama	19,775	10,144	29,919	15,099	11,320	26,419	45,009	1,694	277,621	337,549
Tottori	15,871	5,791	21,662	6,543	4,208	10,751	24,621	1,261	181,316	215,619
Shimane	18,023	7,264	25,287	9,588	7,298	16,886	30,525	1,742	212,658	255,414
Okayama	75,797	19,894	95,691	31,147	20,266	51,413	98,105	3,047	639,603	767,670
Hiroshima	91,703	23,528	115,231	107,276	40,439	147,715	120,692	5,211	850,674	1,011,009
Yamaguchi	41,011	13,166	54,177	28,542	14,865	43,407	65,059	2,571	461,373	546,392
Tokushima	20,189	8,930	29,119	8,881	5,815	14,696	40,830	1,599	254,450	307,347
Kagawa	36,581	10,507	47,088	8,559	8,282	16,841	51,882	1,685	321,740	388,835
Ehime	43,047	13,588	56,635	14,789	12,144	26,933	67,442	2,265	386,920	475,068
Kochi	18,754	7,701	26,455	6,226	6,852	13,078	32,475	1,358	199,634	244,444
Fukuoka	146,062	43,657	189,719	276,644	95,368	372,012	246,669	10,128	1,566,618	1,877,892
Saga	27,938	10,403	38,341	12,596	7,636	20,232	47,316	2,059	257,174	318,081
Nagasaki	22,798	12,441	35,239	81,715	20,975	102,690	48,245	4,248	338,677	407,826
Kumamoto	41,074	22,052	63,126	37,544	23,814	61,358	97,748	3,808	554,656	679,839
Oita	27,511	13,962	41,473	21,542	15,196	36,738	58,964	2,500	378,858	455,295
Miyazaki	29,977	16,127	46,104	11,845	14,003	25,848	63,382	2,146	349,241	431,976
Kagoshima	45,390	22,123	67,513	42,902	25,837	68,739	92,345	4,209	488,441	614,924
Okinawa	19,494	18,031	37,525	34,453	31,501	65,954	65,485	3,349	364,758	449,981

Notes:

・Freight tonnage carried is an estimation obtained from prorating the transportation volumes in each District Transpiration Bureau presented in "Annual Report on Automobile Transportation" by the ratio of the registered number of automobiles with each Local Land Transport Office as of the end of each FY. However, the tonnage by Specific use vehicles are included, but that by light vehicles are excluded.

・Passenger transportation is tabulated in the same way.

・The differences between the total number of automobiles and the sum of the numbers of trucks, buses, and passenger cars are due to the number of specific use vehicles.

Source: "Transportation censuses," Ministry of Land, Infrastructure, Transport and Tourism

6.11 Trends in freight transportation (1)

（Index：FY2005（Mean）＝100）

	Freight tonnage carried (Thousand tons)										
	Motor freight	Index	Railway freight	Index	J R	Index	Coastal shipping	Index	Airfreight	Index	Total
FY 1950	309,000	-	131,748	222.3	120,193	308.0	49,282	9.5	—	—	490,030
1955	569,000	-	185,354	312.7	152,182	390.0	69,254	13.3	2	0.2	823,610
1960	1,156,291	-	229,856	438.0	186,953	507.1	138,849	32.6	9	0.8	1,525,005
1965	2,193,195	-	243,524	464.1	191,060	518.3	179,645	42.2	33	3.0	2,616,397
1970	4,626,069	-	250,360	477.1	193,106	523.8	376,647	88.4	116	10.7	5,253,192
1975	4,392,859	-	180,616	344.2	137,879	374.0	452,054	106.1	192	17.7	5,025,721
1980	5,317,950	-	162,827	310.3	117,896	319.8	500,258	117.4	329	30.4	5,981,364
1981	5,230,784	-	147,890	249.5	106,778	273.6	479,097	92.1	369	36.4	5,858,140
1982	5,171,623	-	132,356	223.3	93,885	240.6	437,584	84.1	401	39.5	5,741,964
1983	5,123,371	-	117,815	224.5	82,375	223.5	438,038	102.8	443	40.9	5,679,667
1984	5,114,657	-	103,801	197.8	71,503	194.0	450,278	105.7	497	45.9	5,669,233
1985	5,048,048	-	96,285	183.5	65,497	177.7	452,385	106.2	538	49.7	5,597,256
1986	4,969,101	-	87,242	166.3	59,072	160.2	440,677	103.4	602	55.6	5,497,622
1987	5,204,257	104.8	82,189	156.6	55,294	150.0	462,546	108.5	698	64.5	5,749,690
1988	5,578,451	112.3	82,338	156.9	55,695	151.1	493,000	115.7	761	70.3	6,154,550
1989	5,888,248	118.6	82,827	157.8	55,782	151.3	538,029	126.3	827	76.4	6,509,931
1990	6,113,565	123.1	86,619	165.1	58,400	158.4	575,199	135.0	874	80.8	6,776,257
1991	6,260,811	126.1	85,697	163.3	57,390	155.7	571,891	134.2	874	80.8	6,919,273
1992	6,101,706	122.9	82,402	157.0	55,633	150.9	540,410	126.8	854	78.9	6,725,372
1993	5,821,537	117.2	79,259	151.0	53,178	144.3	528,841	124.1	859	79.4	6,430,496
1994	5,810,374	-	78,948	150.5	52,753	143.1	555,764	130.4	910	84.1	6,445,996
1995	6,016,571	121.2	76,932	146.6	51,456	139.6	548,542	128.7	960	88.7	6,643,005
1996	6,177,265	124.4	73,558	140.2	49,185	133.4	546,909	128.3	1,002	92.6	6,798,734
1997	6,065,384	122.1	69,228	131.9	47,286	128.3	541,437	127.1	1,014	93.7	6,677,063
1998	5,819,881	117.2	60,369	115.0	40,604	110.1	516,647	121.2	1,015	93.8	6,397,912
1999	5,863,259	118.1	58,685	111.8	39,154	106.2	522,602	122.6	1,061	98.1	6,445,607
2000	5,773,619	116.3	59,274	113.0	39,620	107.5	537,021	126.0	1,103	101.9	6,371,017
2001	5,578,227	112.3	58,668	111.8	39,026	105.9	520,067	122.0	1,015	93.8	6,157,977
2002	5,339,487	107.5	56,592	107.8	38,197	103.6	497,251	116.7	1,001	92.5	5,894,331
2003	5,234,076	105.4	53,602	102.2	37,552	101.9	445,544	104.6	1,033	95.5	5,734,255
2004	5,075,877	102.2	52,219	99.5	36,789	99.8	440,252	103.3	1,065	98.4	5,569,413
2005	4,965,874 (4,842,232)	100.0 (97.8)	52,473	100.0	36,864	100.0	426,145	100.0	1,082	100.0	5,445,574 (5,358,796)
2006	4,961,325 (4,837,022)	99.9 (97.5)	51,872	98.9	36,371	98.7	416,644	97.8	1,099	101.6	5,430,940 (5,343,008)
2007	4,932,539 (4,811,884)	99.3 (97.6)	50,850	96.9	35,958	97.5	409,694	96.1	1,145	105.8	5,394,228 (5,309,531)
2008	4,718,318 (4,600,752)	95.0 (97.5)	46,225	88.1	32,850	89.1	378,705	88.9	1,074	99.3	5,144,322 (5,059,606)
2009	4,454,028 (4,339,538)	91.5 (97.4)	43,251	82.4	30,849	83.7	332,175	75.6	1,027	94.9	4,830,481 (4,746,840)
2010	4,480,195	-	43,647	83.2	30,790	83.5	366,734	86.1	1,004	92.8	4,891,580
2011	4,496,954	-	39,886	76.0	-	-	360,983	84.7	960	88.7	4,898,783
2012	4,365,927	87.9	42,340	80.7	-	-	365,992	85.8	977	90.2	4,775,236
2013	4,345,753	87.5	44,101	84.0	-	-	378,334	88.8	1,016	93.9	4,769,204
2014	4,315,836	86.9	43,424	82.8	-	-	369,302	86.7	1,024	94.6	4,729,586

Note:

・In FY 1987, "Motor Freight" started to incorporate the tonnage carried by light motor vehicles. Consequently, the contents of data prior to FY 1986 and those after FY1987 are not continuous.

・"Motor freight" in FY 1994 does not include the figure in Hyogo prefecture between January and March in 1995.

・Column for Index of cars in FY 1994 was left out since it does not include data from Hyogo prefecture.

・Starting in FY 2010, methodology of survey as well as data processing was changed in Monthly Statistical Report on Motor Vehicle Transport. Consequently, data prior to FY 2009 and those after FY2010 are not continuous. Mini trucks for private use are excluded from the survey. For your reference, parenthesized numbers indicate data without those of minitrucks.

・"Motor freight" in FY 2010 as well as in FY 2011 does not include March and April data from Hokkaido District Transport Bureau and Tohoku District due to the Great East Japan Earthquake. Automobile index for FY 2010 and FY 2011 have been left out because data from Hokkaido District Transport Bureau and Tohoku District Transport Bureau are not available.

Only charged freight is included in Railway freight. In Monthly Statistical Report on Railway, JR data became unavailable in FY 2011, thus the data is no longer shown.

・Monthly transport volume for "Coastal shipping" and mean volume in FY 2003 do not include personal use.

・Transport volume for airfreight (regular service) includes overweight baggage and postal matters.

・Index is based on FY 2005.

6.11 Trends in freight transportation (2)

（Index: FY 2005（Mean）＝100）

	Freight ton-kilometers (Million tons)										
	Motor freight	Index	Railway freight	Index	J R	Index	Coastal shipping	Index	Airfreight	Index	Total
FY 1950	5,400	-	31,246	141.2	30,715	140.5	25,500	10.6	—	—	62,146
1955	9,500	-	42,695	192.9	42,005	192.2	29,022	12.0	1	0.1	81,218
1960	20,801	-	53,916	236.3	52,993	234.5	63,579	30.1	6	0.6	138,302
1965	48,392	-	56,678	248.4	55,788	246.8	80,635	38.1	21	2.0	185,726
1970	135,916	-	63,031	276.3	62,043	274.5	151,243	71.5	74	6.9	350,264
1975	129,701	-	47,058	206.3	46,288	204.8	183,579	86.8	152	14.1	360,490
1980	178,901	-	37,428	164.1	36,688	162.3	222,173	105.0	290	27.0	438,792
1981	181,309	-	33,806	152.7	33,116	151.5	211,763	87.6	327	30.4	427,205
1982	187,719	-	30,596	138.2	29,961	137.1	198,052	82.0	360	33.5	416,727
1983	193,527	-	27,373	120.0	26,812	118.6	200,748	94.9	400	37.2	422,048
1984	200,813	-	22,998	100.8	22,485	99.5	210,107	99.3	446	41.5	434,364
1985	205,941	-	21,919	96.1	21,410	94.7	205,818	97.3	482	44.8	434,160
1986	216,115	-	20,446	89.6	19,974	88.4	197,953	93.6	545	50.7	435,059
1987	226,425	67.6	20,474	89.7	20,026	88.6	201,386	95.2	634	59.0	448,919
1988	246,088	73.5	23,478	102.9	23,031	101.9	212,628	100.5	683	63.5	482,877
1989	262,857	78.5	25,136	110.2	24,675	109.2	220,063	104.0	753	70.0	508,809
1990	274,244	81.9	27,196	119.2	26,728	118.3	244,546	115.6	799	74.3	546,785
1991	283,776	84.7	27,157	119.0	26,698	118.1	248,203	117.3	812	75.5	559,948
1992	281,599	84.1	26,668	116.9	26,241	116.1	248,002	117.2	804	74.8	557,073
1993	275,885	82.4	25,433	111.5	25,027	110.7	233,526	110.4	817	76.0	535,661
1994	280,587	-	24,493	107.4	24,077	106.5	238,540	112.7	871	81.0	544,491
1995	294,648	88.0	25,101	110.0	24,702	109.3	238,330	112.6	924	86.0	559,002
1996	305,510	91.2	24,968	109.4	24,061	108.8	241,756	114.3	962	89.5	573,196
1997	306,263	91.4	24,618	107.9	24,301	107.5	237,018	112.0	981	91.3	568,880
1998	300,670	89.8	22,920	100.5	22,643	100.2	226,980	107.3	985	91.6	551,555
1999	307,149	91.7	22,541	98.8	22,272	98.5	229,432	108.4	1,039	96.7	560,161
2000	313,118	93.5	22,136	97.0	21,855	96.7	241,671	114.2	1,075	100.0	578,000
2001	313,072	93.5	22,193	97.3	21,907	96.9	244,451	115.5	994	92.5	580,710
2002	312,028	93.1	22,131	97.0	21,860	96.7	235,582	111.3	991	92.2	570,732
2003	321,862	96.1	22,794	99.9	22,565	99.8	218,190	103.1	1,027	95.5	563,873
2004	327,632	97.8	22,476	98.5	22,264	98.5	218,833	103.4	1,058	98.4	569,999
2005	334,979 (333,524)	100.0 (102.2)	22,813	100.0	22,601	100.0	211,576	100.0	1,075	100.0	570,443 (568,988)
2006	346,534 (345,035)	103.4 (99.6)	23,192	101.7	22,985	101.7	207,849	98.2	1,094	101.8	578,669 (577,170)
2007	354,800 (353,320)	105.9 (99.6)	23,334	102.3	23,140	102.4	202,962	95.9	1,145	106.5	582,241 (580,761)
2008	346,420 (344,939)	103.4 (99.6)	22,256	97.6	22,081	97.7	187,859	88.8	1,078	100.3	557,613 (556,132)
2009	334,667 (333,181)	99.9 (99.6)	20,562	90.5	20,404	90.3	167,315	79.1	1,043	97.0	523,587 (522,100)
2010	243,150	-	20,398	89.4	20,228	89.5	179,898	85.0	1,032	96.0	444,478
2011	231,061	-	19,998	87.7	-	-	174,900	82.7	992	92.3	426,951
2012	209,956	62.6	20,471	89.7	-	-	177,791	84.0	1,017	94.6	409,235
2013	214,092	63.9	21,071	92.4	-	-	184,860	87.4	1,049	97.6	421,072
2014	210,008	62.7	21,029	92.2	-	-	183,120	86.6	1,050	97.7	415,207

Source: Compiled from "Statistical Report on Motor Vehicle Transport," Ministry of Land, Infrastructure, Transport and Tourism

6.12 Changes in volume of passenger transportation (1)

(Index: FY 2005(mean)=100)

Year	Number of Passengers carried (unit: thousand)										
	Automobile		Railway		J R		Passenger ship		Air		Total
		Index		Index		Index		Index		Index	
FY 1950	1,515,000	…	8,391,932	38.8	3,095,194	35.7	97,348	88.4	–	–	10,044,280
1955	4,261,000	…	9,780,980	45.2	3,849,219	44.4	73,920	67.1	361	0.4	14,116,261
1960	7,900,743	…	12,290,380	56.0	5,123,901	59.0	98,887	95.8	1,260	1.3	20,291,270
1965	14,863,470	…	15,798,168	71.9	6,721,827	77.4	126,007	122.1	5,194	5.5	30,792,839
1970	24,032,433	…	16,384,034	74.6	6,534,477	75.3	173,744	168.4	15,460	16.4	40,605,671
1975	28,411,450	…	17,587,925	80.1	7,048,013	81.2	169,864	164.6	25,467	27.0	46,194,706
1980	33,515,233	…	18,004,962	82.0	6,824,817	78.6	159,751	154.8	40,427	42.8	51,720,373
1981	33,345,267	…	18,218,155	84.2	6,793,030	78.3	160,443	145.7	42,101	45.3	51,765,966
1982	33,510,893	…	18,269,106	84.4	6,742,418	77.8	156,218	141.9	40,486	43.6	51,976,703
1983	33,808,770	…	18,537,677	84.4	6,796,759	78.3	153,340	148.6	40,838	43.2	52,540,625
1984	34,029,706	…	18,753,086	85.4	6,883,837	79.3	154,793	150.0	44,718	47.3	52,982,303
1985	34,678,904	…	18,989,703	86.9	6,941,358	81.0	153,477	148.8	43,777	46.3	53,865,861
1986	34,942,850	…	19,414,040	88.8	7,103,955	82.9	154,127	149.4	46,367	49.1	54,557,384
1987	49,164,738	74.6	19,971,994	90.9	7,356,358	84.7	165,000	159.9	50,046	53.0	69,351,778
1988	52,217,608	79.2	20,742,139	94.4	7,761,346	89.4	157,400	152.6	52,945	56.0	73,170,092
1989	55,828,655	84.7	21,210,767	96.6	7,979,882	91.9	160,200	155.3	60,120	63.6	77,259,742
1990	55,767,427	84.6	21,938,609	99.9	8,357,583	96.3	162,600	157.6	65,252	69.1	77,933,888
1991	57,555,953	87.3	22,559,810	102.7	8,675,929	99.9	162,000	157.0	68,687	72.7	80,346,450
1992	58,841,075	89.2	22,694,082	103.3	8,817,783	101.6	157,855	153.0	69,687	73.8	81,762,699
1993	59,284,686	89.9	22,759,159	103.6	8,906,301	102.6	157,250	152.4	69,584	73.6	82,270,679
1994	59,934,869	…	22,597,951	…	8,883,699	…	150,866	146.2	74,547	78.9	82,758,233
1995	61,271,653	92.9	22,630,439	103.0	8,982,284	103.4	148,828	144.2	78,101	82.7	84,129,021
1996	61,542,541	93.3	22,593,304	102.9	8,997,037	103.6	148,107	143.5	82,131	86.9	84,366,083
1997	62,199,844	94.3	22,244,430	101.3	8,858,611	102.0	144,897	140.4	85,555	90.5	84,674,726
1998	61,838,994	93.8	22,013,765	100.2	8,764,494	100.9	127,665	123.7	87,910	93.0	84,068,334
1999	62,046,830	94.1	21,750,275	99.0	8,717,512	100.4	120,091	116.4	91,588	96.9	84,008,784
2000	62,841,306	95.3	21,646,751	98.6	8,670,971	99.9	110,128	106.7	92,873	98.3	84,691,058
2001	64,590,143	97.9	21,720,088	98.9	8,650,246	99.6	111,869	107.5	94,579	100.1	86,516,679
2002	65,480,675	99.3	21,561,067	98.2	8,685,455	98.9	108,846	105.5	96,662	102.3	87,247,250
2003	65,933,252	100.0	21,757,564	99.1	8,641,879	99.5	107,288	104.0	95,487	101.1	87,893,591
2004	65,990,529	100.1	21,686,454	98.7	8,618,243	99.3	100,872	97.8	93,739	99.2	87,871,594
2005	65,946,689 (6,762,778)	100.0 98.4	21,953,959	100.0	8,683,080	100.0	103,175	100.0	94,490	100.0	88,098,313 28,923,467
2006	65,943,252 (6,746,618)	100.0 (99.8)	22,243,472	101.3	8,778,178	101.1	99,168	96.1	96,971	102.6	88,382,863 29,186,228
2007	66,908,896 (6,697,498)	101.5 (99.3)	22,840,797	104.0	8,988,040	103.5	100,800	97.7	94,849	100.4	89,945,342 29,733,953
2008	66,774,143 (6,631,993)	101.3 (99.0)	22,976,100	104.6	8,984,425	103.5	99,032	92.0	90,662	95.9	89,939,937 29,797,787
2009	66,599,647 (6,424,629)	101.0 (96.9)	22,724,442	103.5	8,840,672	101.8	92,173	89.3	83,872	88.8	89,500,134 29,325,116
2010	6,241,395	…	22,669,009	103.2	8,818,311	101.6	85,047	82.4	82,211	87.0	29,077,662
2011	6,073,486	…	22,632,357	103.0	8,837,406	101.8	84,065	81.4	79,052	83.7	28,868,960
2012	6,076,806	…	23,041,856	104.9	8,962,809	103.2	87,134	84.4	85,996	91.0	29,291,792
2013	6,125,916	…	23,606,410	107.5	9,146,991	105.3	88,018	85.3	92,643	98.0	29,912,987
2014	6,057,426	…	23,599,851	107.5	9,088,121	104.7	85,859	83.2	95,197	100.7	29,838,333

Notes:

・In FY 1987, "Automobile" started to include light motor vehicles, thus the data are not continuous from the data in FY 1986 or before.

・Data for automobile in FY 1994 do not include data from Hyogo prefecture between Jan. and Mar. in FY 1995 (excluding commercial busses). Also, data for automobile between Jan. and Feb. in 1995 does not include data from Hyogo prefecture (excluding commercial busses).

・Index of automobile in FY 1994 is left out because the data did not include data from Hyogo prefecture

・Starting in FY 2010, methodology of survey as well as data processing was changed in Monthly Statistical Report on Motor Vehicle Transport. Consequently, data prior to FY 2010 and that in 2010 and onward are not continuous. In the "Automobiles", passenger cars for private use and light motor vehicles are excluded from the survey, and only data for cars for business uses are disclosed. For your reference, parenthesized numbers indicate data for business-use automobiles.

・Data for Automobile in FY 2010 as well as in FY 2011 does not include March and April data in 2011 from Hokkaido District Transport Bureau and Tohoku District (except buses for business use) due to the occurrence of the Great East Japan Earthquake. Automobile index for FY 2010 and FY 2011 have been left out because data from Hokkaido District Transport Bureau and Tohoku District Transport Bureau is not available.

・As for railway data in FY1987 and onward, some numbers of passengers carried are duplicated in one or more JR operating companies. Consequently, data prior to and after FY 1987 are not continuous .

・As for transportation volume by passenger ships, data includes only regular service up to FY 1972, and both regular and irregular services are included in FY 1973 and onward. p to FY 1969, transportation volume passenger kilometer was estimated by multiplying number of transportation volume by 27 kilometers (an average transport kilometers per person).

・Domestic Air includes only regular flights.

・Index is based on FY 2005.

6.12 Changes in volume of passenger transportation (2)

(Index :FY 2005(mean)=100)

Year	Passenger -kilometers carried (unit: million passenger-kilometers)										
	Automobile		Railway		J R		Passenger ship		Air		Total
		Index		Index		Index		Index		Index	
FY 1950	9,000	…	105,468	27.4	69,004	28.7	2,628	61.1	–	–	117,096
1955	27,500	…	136,112	35.4	91,239	37.9	1,996	46.4	225	0.3	165,833
1960	55,531	…	184,340	47.1	126,983	51.6	2,670	66.3	737	0.9	243,278
1965	120,756	…	255,484	65.3	174,014	70.7	3,402	84.5	2,952	3.5	382,594
1970	284,229	…	288,815	73.8	189,726	77.1	4,814	119.6	9,319	11.2	587,177
1975	360,868	…	323,800	82.8	215,289	87.5	6,895	171.3	19,148	23.0	710,711
1980	431,669	…	314,542	80.4	193,143	78.5	6,132	152.3	29,688	35.7	782,031
1981	437,078	…	316,205	82.3	192,115	79.8	6,044	140.4	31,032	38.9	790,359
1982	452,055	…	316,347	82.3	190,767	79.3	5,859	136.1	30,106	37.8	804,367
1983	464,165	…	321,452	82.2	192,906	78.4	5,722	142.2	30,627	36.8	821,966
1984	468,695	…	324,135	82.9	194,180	78.9	5,780	143.6	33,499	40.3	832,109
1985	489,260	…	330,101	84.4	197,463	80.3	5,752	142.9	33,119	39.8	858,232
1986	499,844	…	334,741	85.5	198,299	80.6	5,684	141.2	35,324	42.4	875,593
1987	718,478	77.0	344,729	88.1	204,677	83.2	6,242	155.1	38,535	46.3	1,107,984
1988	782,033	83.8	361,796	92.5	217,589	88.5	5,711	141.9	41,102	49.4	1,190,642
1989	845,123	90.6	368,818	94.3	222,671	90.5	5,962	148.1	47,141	56.6	1,267,044
1990	853,060	91.4	387,478	99.0	237,657	96.6	6,275	155.9	51,623	62.0	1,298,436
1991	869,337	93.2	400,083	102.3	247,031	100.4	6,195	153.9	55,349	66.5	1,330,964
1992	888,279	95.2	402,258	102.8	249,606	101.5	6,097	151.5	56,680	68.1	1,353,314
1993	889,873	95.4	402,727	102.9	250,016	101.6	6,061	150.6	57,118	68.6	1,355,779
1994	896,751	…	396,332	101.3	244,378	99.3	5,946	147.7	61,289	73.6	1,360,318
1995	917,419	98.3	400,056	102.3	248,998	101.2	5,637	140.0	65,012	78.1	1,388,124
1996	931,721	99.9	402,156	102.8	251,724	102.3	5,634	140.0	69,049	83.0	1,408,560
1997	944,972	101.3	395,239	101.0	247,652	100.7	5,351	132.9	73,243	88.0	1,418,805
1998	954,807	102.3	388,938	99.4	242,810	98.7	4,620	114.8	75,988	91.3	1,424,353
1999	955,563	102.4	385,101	98.4	240,795	97.9	4,479	111.3	79,348	95.3	1,424,491
2000	951,253	102.0	384,441	98.3	240,659	97.8	4,304	106.9	79,698	95.8	1,419,696
2001	954,292	102.3	385,421	98.5	241,133	98.0	4,006	99.5	81,459	97.9	1,425,178
2002	955,413	102.4	382,236	97.7	239,243	97.3	3,893	96.7	83,949	100.9	1,425,491
2003	954,186	102.3	384,958	98.4	241,160	98.0	4,024	100.0	83,311	100.1	1,426,479
2004	947,563	101.6	385,163	98.4	241,977	98.4	3,869	96.1	81,786	98.3	1,418,381
2005	933,006 (84,266)	100.0 (101.3)	391,228	100.0	245,996	100.0	4,025	100.0	83,220	100.0	1,411,479 (562,739)
2006	917,938 (84,075)	98.4 (99.8)	395,908	101.2	249,029	101.2	3,783	94.0	85,746	103.0	1,403,375 (569,512)
2007	936,049 (83,082)	98.5 (98.8)	405,544	103.7	255,210	103.7	3,834	95.3	84,327	101.3	1,429,754 (576,787)
2008	905,907 (83,831)	97.1 (100.9)	404,585	103.4	253,556	103.1	3,510	87.0	80,931	97.2	1,394,933 (572,857)
2009	898,721 (81,360)	96.3 (97.1)	393,765	100.7	244,247	99.3	3,073	76.3	75,203	90.4	1,370,762 (553,401)
2010	77,677	…	393,466	100.6	244,593	99.4	3,004	74.6	73,750	88.6	547,897
2011	73,916	…	395,067	101.0	246,937	100.4	3,047	75.7	71,165	85.5	543,195
2012	75,668	…	404,396	103.3	253,788	103.1	3,092	76.8	77,917	93.6	561,073
2013	74,571	…	414,387	105.9	260,013	105.7	3,265	81.1	84,144	101.1	576,367
2014	72,579	…	413,970	105.8	260,097	105.7	2,923	72.6	86,763	104.3	576,235

Source: Compiled from "Summary of Transportation Statistics," Ministry of Land, Infrastructure, Transport and Tourism

6.13 Changes in transport share by mode (1)

1. Freight

	Tonnage				Ton-kilometer			
	Automobile	Railway	Coastal shipping	Domestic airline	Automobile	Railway	Coastal shipping	Domestic airline
FY 1955	69.1	22.5	8.4	0.0	11.7	52.6	35.7	0.0
1960	75.8	15.1	9.1	0.0	15.0	39.0	46.0	0.0
1965	83.8	9.3	6.9	0.0	26.1	30.5	43.4	0.0
1970	88.1	4.8	7.2	0.0	38.8	18.0	43.2	0.0
1975	87.4	3.6	9.0	0.0	36.0	13.1	50.9	0.0
1980	89.0	2.7	8.4	0.0	40.8	8.5	50.6	0.1
1985	90.2	1.7	8.1	0.0	47.5	4.9	47.5	0.1
1986	90.4	1.6	8.0	0.0	49.7	4.6	45.5	0.1
1987	90.5	1.4	8.0	0.0	50.4	4.6	44.9	0.1
1988	90.6	1.3	8.0	0.0	51.0	4.9	44.0	0.1
1989	90.5	1.3	8.3	0.0	51.7	4.9	43.3	0.1
1990	90.2	1.3	8.5	0.0	50.2	5.0	44.7	0.1
1991	90.5	1.2	8.3	0.0	50.7	4.9	44.3	0.1
1992	90.7	1.2	8.0	0.0	50.5	4.8	44.5	0.1
1993	90.5	1.2	8.2	0.0	51.5	4.7	43.6	0.2
1994	90.1	1.2	8.6	0.0	51.5	4.5	43.8	0.2
1995	90.6	1.2	8.3	0.0	52.7	4.5	42.6	0.2
1996	90.9	1.1	8.0	0.0	53.3	4.4	42.1	0.2
1997	90.8	1.0	8.1	0.0	53.8	4.3	41.7	0.2
1998	91.0	0.9	8.1	0.0	54.5	4.2	41.2	0.2
1999	91.0	0.9	8.1	0.0	54.8	4.0	41.0	0.2
2000	90.6	0.9	8.4	0.0	54.2	3.8	41.8	0.2
2001	90.6	1.0	8.4	0.0	53.9	3.8	42.1	0.2
2002	90.6	1.0	8.4	0.0	54.7	3.9	41.3	0.2
2003	91.3	0.9	7.8	0.0	57.1	4.0	38.7	0.2
2004	91.1	0.9	7.9	0.0	57.5	3.9	38.4	0.2
2005	91.2	1.0	7.8	0.0	58.7	4.0	37.1	0.2
	(91.0)	(1.0)	(8.0)	(0.0)	(58.6)	(4.0)	(37.2)	(0.2)
2006	91.4	1.0	7.7	0.0	59.9	4.0	35.9	0.2
	(91.2)	(1.0)	(7.9)	(0.0)	(59.8)	(4.0)	(36.0)	(0.2)
2007	91.4	0.9	7.6	0.0	60.9	4.0	34.9	0.2
	(91.2)	(1.0)	(7.8)	(0.0)	(60.8)	(1.0)	(34.9)	(0.2)
2008	91.7	0.9	7.4	0.0	62.1	4.0	33.7	0.2
	(91.5)	(0.9)	(7.5)	(0.0)	(62.0)	(4.0)	(33.8)	(0.2)
2009	92.2	0.9	7.0	0.0	63.9	3.9	32.0	0.2
	(92.0)	(0.9)	(7.0)	(0.0)	(63.8)	(3.9)	(32.0)	(0.2)
2010	91.8	0.9	7.3	0.0	54.9	4.6	40.3	0.2
2011	91.8	0.8	7.4	0.0	54.1	4.7	41.0	0.2
2012	91.4	0.9	7.7	0.0	51.3	5.0	43.4	0.2
2013	91.1	0.9	7.9	0.0	50.8	5.0	43.9	0.2
2014	91.3	0.9	7.8	0.0	50.6	5.1	44.1	0.3

6.13 Changes in transport share by mode (2)

2. Passengers

	Passengers transported				Persons-kilometers			
	Automobile	Railway	Coastal shipping	Domestic airline	Automobile	Railway	Coastal shipping	Domestic airline
FY 1955	30.2	69.3	0.5	0.0	16.6	82.1	1.2	0.1
1960	38.9	60.6	0.5	0.0	22.8	75.8	1.1	0.3
1965	48.3	51.3	0.4	0.0	31.6	66.8	0.9	0.8
1970	59.2	40.3	0.4	0.0	48.4	49.2	0.8	1.6
1975	61.5	38.1	0.4	0.1	50.8	45.6	1.0	2.7
1980	64.8	34.8	0.3	0.1	55.2	40.2	0.8	3.8
1985	64.4	35.3	0.3	0.1	57.0	38.5	0.7	3.9
1986	64.0	35.6	0.3	0.1	57.1	38.2	0.6	4.0
1987	70.9	28.8	0.2	0.1	64.8	31.1	0.6	3.5
1988	71.4	28.3	0.2	0.1	65.7	30.4	0.5	3.5
1989	72.3	27.5	0.2	0.1	66.7	29.1	0.5	3.7
1990	71.6	28.1	0.2	0.1	65.7	29.8	0.5	4.0
1991	71.6	28.0	0.2	0.1	65.3	30.1	0.5	4.1
1992	72.0	27.8	0.2	0.1	65.6	29.7	0.5	4.2
1993	72.1	27.7	0.2	0.1	65.6	29.7	0.4	4.2
1994	72.4	27.3	0.2	0.1	65.9	29.1	0.4	4.5
1995	72.8	26.9	0.2	0.1	66.1	28.8	0.4	4.7
1996	72.9	26.8	0.2	0.1	66.1	28.6	0.4	4.9
1997	73.5	26.2	0.2	0.1	66.6	27.8	0.4	5.2
1998	73.6	26.2	0.2	0.1	67.0	27.3	0.3	5.3
1999	73.9	25.9	0.1	0.1	67.1	27.0	0.3	5.6
2000	74.2	25.6	0.1	0.1	67.0	27.1	0.3	5.6
2001	74.7	25.1	0.1	0.1	67.0	27.0	0.3	5.7
2002	75.1	24.7	0.1	0.1	67.0	26.8	0.3	5.9
2003	75.0	24.8	0.1	0.1	66.9	27.0	0.3	5.8
2004	75.1	24.7	0.1	0.1	66.8	27.2	0.3	5.8
2005	74.9	24.9	0.1	0.1	66.1	27.7	0.3	5.9
	(23.4)	(75.9)	(0.4)	(0.3)	(15.0)	(69.5)	(0.7)	(14.8)
2006	74.6	25.2	0.1	0.1	65.4	28.2	0.3	6.1
	(23.1)	(76.2)	(0.3)	(0.3)	(14.8)	(69.5)	(0.7)	(15.1)
2007	74.4	25.4	0.1	0.1	65.0	28.7	0.3	6.0
	(22.5)	(76.8)	(0.3)	(0.3)	(14.4)	(70.3)	(0.7)	(14.6)
2008	74.2	25.5	0.1	0.1	64.9	29.0	0.3	5.8
	(22.3)	(77.1)	(0.3)	(0.3)	(14.6)	(70.6)	(0.6)	(14.1)
2009	74.4	25.4	0.1	0.1	65.6	28.7	0.2	5.5
	(21.9)	(77.5)	(0.3)	(0.3)	(14.7)	(71.2)	(0.6)	(13.6)
2010	21.5	78.0	0.3	0.3	14.2	71.8	0.5	13.5
2011	21.0	78.4	0.3	0.3	13.6	72.7	0.6	13.1
2012	20.7	78.7	0.3	0.3	13.5	72.1	0.6	13.9
2013	20.6	78.8	0.3	0.3	12.9	71.9	0.6	14.6
2014	20.3	79.1	0.3	0.3	12.6	71.8	0.5	15.1

Notes:
- Share rate was calculated from table 6.12 previously presented.
- Starting in FY 1987, light motor vehicles and trucks for private were included in automobile, thus, the data prior to and after FY 1987 do not contain sequential data.
- Starting in FY 2010, the figures for "Automobile" are tabulated and disclosed excluding the surveyed data for trucks for t private use , thus, the data prior to and after FY 2010 do not contain sequential data. For your reference, parenthesized figures indicate the relevant values to the definition on the FY2010 basis.
- Due to rounding off fractions, total may not be consistent.

Source: Compiled from "Transportation censuses," Ministry of Land, Infrastructure, Transport and Tourism

6.14 Development and coverage rate of national highways by prefecture (1)

	National highways				Prefectural and municipal roads				National highways & prefectural and municipal roads			
	Total length	Maintenance rate	Improvement rate	Pavement rate	Total length	Maintenance rate	Improvement rate	Pavement rate	Total length	Maintenance rate	Improvement rate	Pavement rate
Hokkaido	6,735.2	92.3	100.0	99.7	11,822.0	89.8	92.7	41.9	18,557.2	90.7	95.3	62.9
Aomori	1,423.1	75.7	88.9	86.5	2,491.6	62.2	67.9	60.9	3,914.7	67.1	75.6	70.2
Iwate	1,767.7	79.6	97.3	93.1	2,922.4	70.3	75.1	51.1	4,690.1	73.8	83.4	66.9
Miyagi	1,202.3	59.1	94.3	96.8	2,297.6	70.3	80.2	85.6	3,499.9	66.4	85.0	89.5
Akita	1,351.4	83.4	95.9	95.8	2,370.0	71.3	74.7	61.7	3,721.4	75.7	82.4	74.1
Yamagata	1,117.6	67.2	93.5	90.8	2,520.5	75.6	81.5	65.8	3,638.0	73.0	85.2	73.4
Fukushima	2,001.0	64.1	87.5	81.5	4,110.8	53.7	63.8	54.4	6,111.9	57.1	71.5	63.3
Ibaraki	1,148.8	56.9	96.6	97.5	3,403.0	57.3	70.6	68.1	4,551.8	57.2	77.1	75.5
Tochigi	915.0	55.2	92.2	98.6	2,844.0	58.0	70.8	81.9	3,759.0	57.3	76.0	85.9
Gunma	929.5	63.9	88.6	93.4	2,521.2	58.4	74.2	79.0	3,450.7	59.9	78.0	82.9
Saitama	909.7	43.8	95.3	97.4	2,491.7	55.9	85.2	88.2	3,401.3	52.7	87.9	90.7
Chiba	1,255.2	54.4	94.9	99.1	2,601.1	53.3	73.5	88.3	3,856.2	53.7	80.5	91.8
Tokyo	346.4	55.0	98.6	100.0	2,338.0	43.6	85.1	95.7	2,684.4	45.1	86.8	96.3
Kanagawa	713.2	50.6	99.0	99.8	1,477.9	47.2	81.2	90.8	2,191.1	48.3	87.0	93.8
Niigata	2,008.1	61.5	88.5	86.6	4,652.9	59.1	66.3	60.8	6,661.0	59.8	73.0	68.6
Toyama	533.9	61.0	93.6	96.6	2,158.7	61.8	79.2	87.8	2,692.6	61.7	82.0	89.5
Ishikawa	616.6	76.6	96.0	96.9	1,901.2	64.8	72.7	76.5	2,517.8	67.7	78.4	81.5
Fukui	794.9	73.2	86.7	87.0	1,564.1	56.7	64.9	59.5	2,359.0	62.3	72.3	68.8
Yamanashi	619.3	59.7	91.4	93.6	1,420.3	48.7	60.5	62.1	2,039.6	52.0	69.9	71.7
Nagano	1,692.3	60.6	88.1	84.5	3,888.9	51.4	60.3	46.9	5,581.2	54.2	68.8	58.3
Gifu	1,603.2	64.8	86.0	91.5	3,080.1	43.1	61.1	75.3	4,683.3	50.6	69.6	80.9
Shizuoka	1,219.1	53.7	91.6	92.9	3,263.6	52.6	70.8	71.5	4,482.6	52.9	76.4	77.3
Aichi	1,336.2	57.7	96.1	96.0	4,232.3	53.9	76.3	81.5	5,568.5	54.8	81.0	85.0
Mie	1,209.3	63.7	89.8	87.7	2,649.7	49.5	62.1	56.8	3,859.0	54.0	70.8	66.5
Shiga	687.4	54.7	93.2	95.7	1,839.5	48.3	65.9	73.4	2,526.9	50.0	73.3	79.4
Kyoto	931.5	62.6	91.0	95.5	2,182.3	43.9	56.5	66.4	3,113.8	49.5	66.8	75.1
Osaka	660.3	42.5	93.8	100.0	1,784.1	55.3	83.3	99.2	2,444.4	51.9	86.1	99.4
Hyogo	1,494.9	66.6	95.1	96.5	4,400.2	53.4	68.8	75.7	5,895.1	56.7	75.5	80.9
Nara	842.6	52.1	72.4	84.0	1,293.6	31.6	45.4	53.9	2,136.2	39.7	56.0	65.7
Wakayama	1,040.5	65.6	76.8	80.4	1,884.3	40.5	45.6	59.6	2,924.8	49.4	56.7	67.0
Tottori	595.3	79.4	98.8	97.8	1,642.5	70.7	78.4	76.2	2,237.8	73.0	83.8	81.9
Shimane	958.1	70.1	92.7	94.1	2,501.6	51.0	58.3	60.9	3,459.8	56.3	67.8	70.1
Okayama	1,017.2	67.9	97.0	94.8	3,569.5	47.2	59.5	53.4	4,586.8	51.8	67.8	62.6
Hiroshima	1,520.8	65.7	93.4	95.1	3,692.7	56.5	67.3	73.4	5,213.5	59.2	74.9	79.7
Yamaguchi	1,112.0	75.8	93.3	93.8	2,791.3	45.0	53.2	50.9	3,903.3	53.7	64.6	63.1
Tokushima	708.1	56.0	73.2	79.0	1,782.9	30.4	44.3	49.3	2,491.0	37.7	52.5	57.8
Kagawa	369.7	70.5	98.3	99.0	1,563.1	65.5	75.5	77.0	1,932.7	66.4	79.9	81.2
Ehime	1,081.6	68.7	89.5	85.7	2,886.9	44.6	51.9	42.0	3,968.5	51.2	62.2	53.9
Kochi	1,067.8	73.5	84.7	85.1	2,091.6	32.7	39.9	40.1	3,159.4	46.5	55.0	55.3
Fukuoka	1,182.5	54.4	95.4	92.2	3,510.2	45.8	75.8	57.5	4,692.8	48.0	80.7	66.2
Saga	630.2	64.1	97.3	98.0	1,263.9	52.6	67.9	73.5	1,894.1	56.4	77.7	81.6
Nagasaki	986.7	61.5	91.1	91.8	1,666.0	53.7	61.5	58.4	2,652.7	56.6	72.5	70.8
Kumamoto	1,244.7	63.8	95.9	95.3	2,949.8	52.2	61.7	55.8	4,194.5	55.6	71.8	67.5
Oita	1,078.9	75.2	94.5	94.0	2,522.9	61.2	68.6	62.4	3,601.8	65.4	76.4	71.9
Miyazaki	1,171.1	63.6	82.7	79.3	2,011.4	51.4	60.3	59.8	3,182.5	55.9	68.6	67.0
Kagoshima	1,307.7	74.8	96.4	95.0	3,523.2	67.8	73.5	65.2	4,830.9	69.7	79.7	73.2
Okinawa	506.5	63.7	98.9	98.1	1,069.0	73.4	90.4	89.5	1,575.5	70.3	93.1	92.2
Nationwide	55,645.4	67.8	92.6	92.8	129,446.0	57.6	69.9	64.6	185,091.4	60.7	76.7	73.1

Notes:

・Maintenance rates are estimates based on Road Traffic census in FY 2015.
・The improvement rates were calculated by using the total length of improved roads.
・To calculate improvement rates of prefectural and municipal roads, and also the above, those of which roadway width is 5.5 meters or more are in consideration.
・Pavement rate does not include pavement done by the simplified method.
・Ordinance-designated cities are included.
・Due to influence of Great East Japan Earthquake, for Iwate, Miyagi and Fukushima prefectures, part of the data for Municipal roads include data before April 1st, 2015.

6.14 Development and coverage rate of national highways by prefecture (2)

	Municipal roads			Total			
	Total length	Maintenance rate	Pavement rate	Total length	Maintenance rate	Improvement rate	Pavement rate
Hokkaido	71,121.7	67.5	14.5	89,678.9	72.3	73.3	24.5
Aomori	15,972.8	59.1	24.0	19,887.5	60.7	62.4	33.1
Iwate	28,386.8	59.3	9.5	33,076.9	61.4	62.8	17.6
Miyagi	21,440.2	68.4	20.5	24,940.1	68.2	70.8	30.2
Akita	19,944.5	66.6	8.6	23,655.9	68.0	69.1	18.9
Yamagata	12,911.5	67.1	12.3	16,549.6	68.4	71.1	25.8
Fukushima	32,647.2	57.7	10.8	38,759.1	57.6	59.9	19.1
Ibaraki	51,137.7	38.6	8.2	55,689.6	40.1	41.7	13.7
Tochigi	21,419.8	68.5	12.6	25,178.8	66.9	69.6	23.6
Gunma	31,382.4	48.0	10.3	34,833.1	49.2	51.0	17.5
Saitama	43,546.2	51.9	11.4	46,947.5	51.9	54.5	17.2
Chiba	36,615.0	59.0	18.0	40,471.3	58.5	61.0	25.1
Tokyo	21,498.7	71.7	60.3	24,183.1	68.8	73.4	64.3
Kanagawa	23,379.4	66.5	53.4	25,570.4	64.9	68.2	56.8
Niigata	30,488.0	62.5	10.4	37,149.0	62.0	64.4	20.8
Toyama	11,139.0	77.0	29.1	13,831.6	74.0	78.0	40.9
Ishikawa	10,521.2	75.0	14.0	13,039.1	73.6	75.6	27.0
Fukui	8,385.4	72.3	25.8	10,744.4	70.1	72.3	35.2
Yamanashi	9,034.8	60.9	17.6	11,074.4	59.3	62.6	27.6
Nagano	42,101.7	48.9	7.9	47,682.9	49.5	51.2	13.8
Gifu	25,814.0	55.4	10.3	30,497.3	54.6	57.6	21.1
Shizuoka	32,131.7	58.2	20.0	36,614.3	57.6	60.5	27.0
Aichi	44,495.3	65.6	26.9	50,063.8	64.4	67.3	33.4
Mie	21,258.4	49.9	17.4	25,117.5	50.5	53.1	25.0
Shiga	9,847.6	60.0	28.6	12,374.5	58.0	62.7	39.0
Kyoto	12,382.5	55.0	32.8	15,496.3	53.9	57.4	41.3
Osaka	16,960.0	76.4	71.6	19,404.4	73.3	77.6	75.1
Hyogo	30,329.7	59.9	30.8	36,224.9	59.4	62.4	38.9
Nara	10,525.6	45.6	22.8	12,661.8	44.6	47.4	30.0
Wakayama	10,643.8	43.1	47.7	13,568.6	44.4	46.0	51.8
Tottori	6,568.0	65.5	17.5	8,805.8	67.4	70.1	33.9
Shimane	14,699.0	54.4	9.1	18,158.8	54.8	57.0	20.7
Okayama	27,365.0	45.1	11.4	31,951.7	46.0	48.3	18.7
Hiroshima	23,526.1	57.5	35.0	28,739.7	57.8	60.7	43.1
Yamaguchi	12,476.8	58.4	27.5	16,380.1	57.3	59.9	36.0
Tokushima	12,617.8	45.1	14.8	15,108.8	43.9	46.3	21.9
Kagawa	8,263.7	61.3	15.7	10,196.4	62.3	64.8	28.1
Ehime	14,191.2	50.7	12.9	18,159.7	50.8	53.2	21.8
Kochi	10,828.8	44.6	12.0	13,988.3	45.0	47.0	21.8
Fukuoka	32,747.5	64.6	10.4	37,440.3	62.5	66.6	17.4
Saga	8,998.8	70.0	14.1	10,892.9	67.6	71.3	25.9
Nagasaki	15,338.2	49.7	27.9	17,990.9	50.7	53.0	34.2
Kumamoto	21,669.8	56.0	17.6	25,864.3	56.0	58.6	25.7
Oita	14,631.3	61.0	26.8	18,233.1	61.8	64.0	35.7
Miyazaki	16,766.1	56.8	12.4	19,948.6	56.7	58.7	21.1
Kagoshima	22,329.5	69.2	11.1	27,160.4	69.3	71.0	22.1
Okinawa	6,499.6	64.1	39.9	8,075.1	65.3	69.7	50.1
Nationwide	1,026,979.9	58.6	19.3	1,212,071.3	58.9	61.3	27.5

Notes:
- Maintenance rates are estimates based on Road Traffic census in FY 2015.
- The improvement rates were calculated by using the total length of improved roads.
- To calculate improvement rates of prefectural and municipal roads, and also the above, those of which roadway width is 5.5 meters or more are in consideration.
- Pavement rate does not include pavement done by the simplified method.
- Ordinance-designated cities are included.
- Due to influence of Great East Japan Earthquake, for Iwate, Miyagi and Fukushima prefectures, part of the data for Municipal roads include data before April 1st, 2015.

6.14 Development and coverage rate of national highways by prefecture (3)

	Area (A) (km²)	Population (B) (Thousand people)	Total length of national highways and Prefectural and municipal roads (C) (km)	Length of roads per 1km² (C/A) (m)	Total length of roads per one thousand people (C/B) (km)	Road area (D) (km²)	Road rate (D/A) (%)	Paved roads (E) (km)	Number of vehicles owned (F) (Thousand)	Total length of paved roads per vehicle (E/F) (m)
Hokkaido	83.424	5,382	18,557	222.4	3.45	709.62	0.85	11,672.1	3,555	3.3
Aomori	9.646	1,308	3,915	405.9	2.99	129.81	1.35	2,749.6	976	2.8
Iwate	15.275	1,280	4,690	307.0	3.66	200.76	1.31	3,138.7	991	3.2
Miyagi	*7.282	2,334	3,500	480.6	1.50	167.63	2.30	3,131.2	1,611	1.9
Akita	11.638	1,023	3,721	319.8	3.64	146.11	1.26	2,756.0	798	3.5
Yamagata	*9.323	1,124	3,638	390.2	3.24	120.51	1.29	2,671.7	908	2.9
Fukushima	13.784	1,914	6,112	443.4	3.19	229.69	1.67	3,868.1	1,583	2.4
Ibaraki	6.097	2,917	4,552	746.6	1.56	287.24	4.71	3,438.6	2,468	1.4
Tochigi	6.408	1,974	3,759	586.6	1.90	165.20	2.58	3,229.9	1,633	2.0
Gunma	6.362	1,973	3,451	542.4	1.75	184.69	2.90	2,859.7	1,711	1.7
Saitama	*3.798	7,267	3,401	895.6	0.47	259.81	6.84	3,084.3	3,842	0.8
Chiba	*5.158	6,223	3,856	747.7	0.62	243.48	4.72	3,539.7	3,429	1.0
Tokyo	*2.191	13,515	2,684	1225.2	0.20	176.76	8.07	2,584.4	3,930	0.7
Kanagawa	2.416	9,126	2,191	907.0	0.24	169.57	7.02	2,054.5	3,677	0.6
Niigata	*12.584	2,304	6,661	529.3	2.89	243.18	1.93	4,569.0	719	6.4
Toyama	*4.248	1,066	2,693	633.9	2.53	101.36	2.39	2,410.8	1,783	1.4
Ishikawa	4.186	1,154	2,518	601.5	2.18	96.04	2.29	2,051.9	874	2.3
Fukui	4.190	787	2,359	562.9	3.00	75.23	1.80	1,622.7	874	1.9
Yamanashi	*4.465	835	2,040	456.8	2.44	65.43	1.47	1,462.1	1,822	0.8
Nagano	*13.562	2,099	5,581	411.5	2.66	238.50	1.76	3,251.9	644	5.0
Gifu	*10.621	2,032	4,683	440.9	2.30	182.34	1.72	3,786.5	1,624	2.3
Shizuoka	*7.777	3,700	4,483	576.4	1.21	227.99	2.93	3,467.0	2,727	1.3
Aichi	*5.172	7,483	5,569	1076.6	0.74	336.27	6.50	4,731.1	4,919	1.0
Mie	*5.774	1,816	3,859	668.3	2.13	142.78	2.47	2,566.6	1,449	1.8
Shiga	*4.017	1,413	2,527	629.0	1.79	86.24	2.15	2,007.1	980	2.0
Kyoto	4.612	2,610	3,114	675.1	1.19	97.12	2.11	2,338.4	1,268	1.8
Osaka	1.905	8,839	2,444	1283.0	0.28	154.14	8.09	2,429.5	3,483	0.7
Hyogo	8.401	5,535	5,895	701.7	1.07	231.81	2.76	4,771.2	800	6.0
Nara	3.691	1,364	2,136	578.8	1.57	68.25	1.85	1,404.2	720	2.0
Wakayama	4.725	964	2,925	619.1	3.03	70.48	1.49	1,959.0	2,840	0.7
Tottori	3.507	573	2,238	638.1	3.91	58.59	1.67	1,833.0	453	4.0
Shimane	6.708	694	3,460	515.7	4.99	100.58	1.50	2,425.5	539	4.5
Okayama	*7.115	1,922	4,587	644.7	2.39	168.23	2.36	2,870.5	1,467	2.0
Hiroshima	8.479	2,844	5,214	614.8	1.83	179.91	2.12	4,156.7	1,801	2.3
Yamaguchi	6.112	1,405	3,903	638.6	2.78	110.80	1.81	2,463.8	1,038	2.4
Tokushima	4.147	756	2,491	600.7	3.29	75.97	1.83	1,438.6	599	2.4
Kagawa	*1.877	976	1,933	1029.9	1.98	65.99	3.52	1,570.2	752	2.1
Ehime	5.676	1,385	3,968	699.2	2.87	106.51	1.88	2,140.1	975	2.2
Kochi	7.104	728	3,159	444.7	4.34	76.24	1.07	1,746.8	539	3.2
Fukuoka	*4.986	5,102	4,693	941.1	0.92	241.23	4.84	3,107.2	3,162	1.0
Saga	2.441	833	1,894	776.1	2.27	72.20	2.96	1,546.2	648	2.4
Nagasaki	4.132	1,377	2,653	642.0	1.93	101.80	2.46	1,878.7	899	2.1
Kumamoto	*7.409	1,786	4,194	566.1	2.35	155.43	2.10	2,832.6	1,317	2.2
Oita	*6.341	1,166	3,602	568.0	3.09	117.59	1.85	2,588.7	886	2.9
Miyazaki	*7.735	1,104	3,183	411.4	2.88	122.14	1.58	2,131.7	901	2.4
Kagoshima	*9.187	1,648	4,831	525.8	2.93	177.43	1.93	3,538.5	1,291	2.7
Okinawa	2.281	1,434	1,576	690.0	1.10	65.27	2.86	1,453.3	1,013	1.4
Nationwide	377.981	127,095	185,091	489.7	1.46	7603.94	2.01	135,329.6	76,921	1.8

Note:
- "Area" was quoted from "Statistical reports on the land area by prefectures and municipalities in Japan (as of October 1st, 2015)" by Geospatial Information Authority of Japan, Ministry of Land, Infrastructure, Transport and Tourism.
- "Population" was quoted from data by Statistic Bureau (as of October 1st. 2015).
- "Number of vehicles owned" was quoted from data by Automobile Information Department, Automobile Bureau, Ministry of Land, Infrastructure, Transport and Tourism (as of the end of FY 2014).
- Due to rounding off of the fraction less than unit, totals and ground total may not be consistent.
- "Road area" refers to the area including Express Highways, National Highways, prefectural and municipal roads.
- Paved extension excludes pavement applied with simplified paving method.
- * Indicates areas of the prefectures with the borderlines that are not yet fixed.
- "Number of vehicles owned" does not include the numbers of trailers, small two wheelers, and two mini-cyclers.

Source: Compiled from "Annual Report the Japanese Roads 2016" by Ministry of Land, Infrastructure, Transport and Tourism

6.15 Traffic Volume of National Expressways, Urban Expressways and Common Roadways (1)

Traffic volume of national expressways and urban expressways (Unit: Car / day)

	National Expressways			Urban Expressways	
	Tomei Expressway	Meishin Expressway	Chuo Expressway	Metropolitan Expressway	Hanshin Expressway
FY 1968	12,001	17,622	9,614	212,132	131,177
1969	21,300	24,578	10,205	323,168	177,278
1970	28,053	31,757	11,331	367,632	254,200
1971	32,282	32,135	12,833	454,574	294,579
1972	39,516	36,966	13,704	496,770	341,744
1973	44,840	41,179	16,295	526,595	368,226
1974	44,858	41,505	17,194	517,780	383,731
1975	41,636	37,700	16,618	523,642	401,236
1976	44,766	40,095	21,058	555,655	423,866
1977	48,062	43,226	24,117	596,833	444,836
1978	53,046	43,937	28,093	688,390	479,025
1979	51,349	47,379	*20,707	704,472	492,013
1980	52,225	48,595	*21,080	734,664	529,680
1981	54,243	49,479	*22,866	770,508	585,587
1982	54,211	49,137	*23,276	778,353	623,524
1983	54,945	50,119	*25,406	765,082	654,082
1984	58,101	53,468	*27,998	798,564	679,862
1985	60,102	54,751	*29,331	835,796	697,000
1986	61,084	56,732	*30,499	857,507	720,300
1987	64,817	60,087	*32,902	928,378	743,143
1988	68,093	63,520	*36,040	1,001,926	768,506
1989	70,790	66,518	*39,135	1,044,538	771,921
1990	73,269	69,522	*42,114	1,108,131	805,458
1991	74,785	70,084	*41,704	1,129,474	821,166
1992	74,571	69,826	*42,449	1,131,062	828,248
1993	74,419	69,217	*41,531	1,114,010	833,610
1994	76,203	67,918	*42,616	1,122,810	830,195
1995	76,839	66,422	*42,510	1,152,295	708,576
1996	79,052	70,788	*43,020	1,164,167	864,169
1997	77,710	71,365	*42,148	1,147,210	940,151
1998	76,562	70,962	*40,971	1,155,504	951,599
1999	76,366	72,146	*41,063	1,158,974	920,291
2000	77,637	73,110	*40,708	1,152,336	919,885
2001	77,065	72,669	*40,231	1,147,468	905,613
2002	76,657	71,810	*39,466	1,118,534	888,631
2003	76,356	70,458	*39,321	1,117,653	893,842
2004	76,895	71,368	*39,290	1,115,716	904,619
2005	78,646	73,198	*39,834	1,142,913	910,933
2006	79,029	73,582	*40,234	1,149,245	912,849
2007	78,484	73,002	*41,527	1,147,000	899,853
2008	75,162	64,735	*40,892	1,114,678	870,970
2009	79,286	67,259	*43,254	1,119,739	861,408
2010	80,543	66,987	*45,555	1,113,870	876,062
2011	79,872	65,882	*44,227	956,459	727,952
2012	63,828	65,335	*42,460	949,430	723,970
2013	64,084	66,943	*41,909	950,495	740,954
2014	62,361	62,499	*39,166	943,833	734,239

Notes:

・Figures for Urban Expressways refers to average traffic volume per day.
・Figures for Chuo Expressway refers to the average traffic volume of the whole of Fujiyoshida line.
However, * indicates the average traffic volume between Hachioji and Kawaguchiko.

Source: Compiled from Annual Report of Road Statistics by Ministry of Land, Infrastructure, Transport and Tourism

6.15 Traffic Volume of National Expressways, Urban Expressways and Common Roadways (2)

Traffic volume of common roadway (Unit: Car / 12 hours)

Types of road/Route name	FY1980	1983	1985	1988	1990	1994	1997	1999	2005	2010
National highway (direct control)	10,065	10,462	10,573	11,566	12,097	12,768	13,275	13,404	13,237	12,197
National highway (non-direct control)	4,538	4,573	4,681	5,237	5,576	5,708	6,158	6,227	6,308	6,261
National highway total	7,183	7,082	7,200	7,956	8,375	8,452	8,929	9,028	9,049	8,651
Major regional roads	3,658	3,679	3,747	4,122	4,360	4,613	4,906	5,008	5,101	4,944
Prefectural road	2,003	2,142	2,187	2,426	2,588	2,690	2,862	2,918	2,934	2,839
Prefectural road total	2,568	2,757	2,809	3,100	3,290	3,586	3,793	3,869	3,919	3,793
TOTAL	3,675	3,938	4,004	4,419	4,670	5,073	5,329	5,415	5,463	5,267
Route 1 From Tokyo to Osaka	20,011	20,741	21,104	21,914	22,013	22,673	23,272	23,161	22,840	22,912
Route 2 From Osaka to Kitakyushu	19,492	20,241	20,629	22,058	22,835	24,286	25,329	24,757	24,896	23,780
Route 3 From Kitakyushu to Kagoshima	15,229	15,836	16,067	17,381	17,987	18,917	19,463	19,193	18,430	18,439
Route 4 From Tokyo to Aomori	13,586	13,596	14,087	15,036	15,628	16,940	17,533	18,436	19,167	18,526
Route 5 From Hakodate to Sapporo	8,215	8,329	8,598	9,119	10,016	10,618	11,614	11,409	11,005	9,440

Notes:

・Figures are the average traffic volume during 12 hours in daytime (7-19 o'clock).

・Traffic volume is defined as the traffic volume excluding that in road-closed sections.

Source: "Road traffic census," Ministry of Land, Infrastructure, and Tourism

6.16 Changes in Kilometers Traveling (one million kilometers)

	Kilometers travelling	Index
FY 1971	243,479	100.0
1972	259,593	106.6
1973	276,194	113.4
1974	266,485	109.4
1975	286,345	117.6
1976	309,698	127.2
1977	342,326	140.6
1978	361,261	148.4
1979	381,951	156.9
1980	389,052	159.8
1981	394,658	162.1
1982	403,101	165.6
1983	408,928	168.0
1984	415,743	170.8
1985	428,442	176.0
1986	441,613	181.4
1987	457,858	188.0
1988	478,289	196.4
1989	501,187	205.8
1990	527,964	216.8
1991	551,110	226.3
1992	566,275	232.6
1993	568,500	233.5
1994	576,132	236.6
1995	596,363	244.9
1996	610,183	250.6
1997	615,099	252.6
1998	613,951	252.2
1999	626,286	257.2
2000	630,755	259.1
2001	639,818	262.8
2002	634,395	260.6
2003	628,769	258.2
2004	610,336	250.7
2005	592,489	243.3
2006	580,483	238.4
2007	573,806	236.7
2008	552,230	226.8
2009	546,041	224.3
2010	484,435	199.0
2011	493,631	202.7
2012	503,953	207.0
2013	501,478	206.0
2014	484,636	199.0

Notes:
- As for the Index, FY1971=100.
- Light motor vehicles are excluded.
- Due to the influence of the Great East Japan Earthquake, figures for 2011 does not include March and April data within the jurisdiction of Hokkaido District Transport Bureau and Tohoku District Transport Bureau.

Source: Compiled from "Transportation censuses," Ministry of Land, Infrastructure, Transport and Tourism

6.17 Changes in number of the next-generation vehicles

Number of vehicles owned	Electric	Plug-in hybrid	Fuel-cell	Hybrid	CNG
FY2009 End	1,941	165	-	983,831	23,137
FY2010 End	9,030	379	-	1,418,400	22,496
FY2011 End	22,262	4,132	-	2,029,009	21,581
FY2012 End	38,707	17,281	-	2,852,105	20,484
FY2013 End	54,757	30,171	-	3,813,387	19,042
FY2014 End	70,706	44,012	150	4,717,344	17,598
FY2015 End	80,511	57,130	630	5,764,401	15,771

Number of vehicles sold	Clean diesel
FY2009	4,562
2010	9,736
2011	9,072
2012	40,567
2013	76,141
2014	79,565
2015	153,592
2016	142,660

Source:

・Other than clean-diesel vehicles: Next Generation Vehicle Promotion Center, Automobile Inspection & Registration Information Association

・Clean-diesel vehicles: Clean Diesel Promotion Association

6.18 Changes in number of fueling facilities for next-generation vehicles

Natural gas (quick charging)

(Units)

FY 1994 End	24
1998	82
2003	270
2008	344
2009	342
2010	333
2011	321
2012	314
2013	300
2014	290

Electric (quick charging)

(Unit: Location)

Apr. 2010	193
Oct.	276
Apr. 2011	629
Oct.	763
Apr. 2012	1,154
Oct.	1,344
Apr. 2013	1,677
Oct.	1,759
Mar. 2014	1,882
Sep.	2,129
Mar. 2015	3,087
Oct.	5,484
Apr. 2016	6,469

Commercial hydrogen station

(Unit: Location)

FY2015 End	76

Hydrogen fueling station derived from renewable energy

(Unit: Location)

FY2015 End	2

Source: Compiled from materials of Japan Revitalization Strategy Revision 2016 , The Japan Gas Association and CHAdeMO Association

6.19 Trends in annual average concentration of Sulfur Dioxide (Ambient air pollution monitoring stations/Roadside air pollution monitoring stations)

	Ambient air pollution monitoring stations		Roadside air pollution monitoring stations	
	Yearly average (ppm)	Number of stations	Yearly average (ppm)	Number of stations
FY1974	0.017	1,125	0.022	24
1975	0.015	1,236	0.021	34
1976	0.014	1,353	0.020	33
1977	0.013	1,414	0.021	40
1978	0.011	1,456	0.018	42
1979	0.010	1,532	0.017	41
1980	0.009	1,571	0.014	43
1981	0.008	1,585	0.012	41
1982	0.007	1,603	0.012	46
1983	0.007	1,612	0.011	52
1984	0.007	1,623	0.011	51
1985	0.006	1,609	0.010	49
1986	0.006	1,608	0.010	49
1987	0.006	1,603	0.011	53
1988	0.006	1,601	0.012	58
1989	0.006	1,599	0.012	65
1990	0.006	1,602	0.012	69
1991	0.006	1,607	0.011	70
1992	0.005	1,614	0.009	78
1993	0.005	1,601	0.007	82
1994	0.005	1,604	0.008	91
1995	0.005	1,608	0.008	94
1996	0.005	1,612	0.008	101
1997	0.005	1,595	0.006	104
1998	0.004	1,579	0.006	103
1999	0.004	1,551	0.005	101
2000	0.005	1,501	0.006	96
2001	0.005	1,489	0.006	95
2002	0.004	1,468	0.005	97
2003	0.004	1,395	0.004	92
2004	0.004	1,361	0.004	89
2005	0.004	1,319	0.004	85
2006	0.003	1,265	0.004	86
2007	0.003	1,236	0.003	82
2008	0.003	1,171	0.003	72
2009	0.003	1,129	0.003	68
2010	0.003	1,114	0.003	68
2011	0.002	1,066	0.003	61
2012	0.002	1,022	0.002	59
2013	0.002	1,011	0.002	58
2014	0.002	1,003	0.002	55
2015	0.002	974	0.002	51

Note:
The figures indicate historical changes in arithmetic means of the annual averages at valid stations.

Source: Compiled from "Air pollution in FY 2015 ," Ministry of the Environment

6.20 Achievement of environmental quality standards for concentration of Sulfur Dioxide (Ambient air pollution monitoring stations/roadside air pollution monitoring stations)

	Ambient air pollution monitoring stations			Roadside air pollution monitoring stations		
	Number of stations where standards were met	Number of valid monitoring stations	Achievement rate (%)	Number of stations where standards were met	Number of valid monitoring stations	Achievement rate (%)
FY1979	1,485	1,532	96.9	35	41	85.4
1980	1,546	1,571	98.4	41	43	95.3
1981	1,569	1,585	99.0	40	42	95.2
1982	1,596	1,603	99.6	44	46	95.7
1983	1,603	1,612	99.4	52	52	100.0
1984	1,614	1,623	99.4	50	51	98.0
1985	1,603	1,609	99.6	49	49	100.0
1986	1,600	1,608	99.5	48	49	98.0
1987	1,596	1,603	99.6	52	53	98.1
1988	1,596	1,601	99.7	57	58	98.3
1989	1,591	1,599	99.5	62	64	96.9
1990	1,598	1,602	99.8	65	68	95.6
1991	1,601	1,607	99.6	69	70	98.6
1992	1,608	1,614	99.6	77	78	98.7
1993	1,598	1,601	99.8	82	82	100.0
1994	1,600	1,604	99.8	91	91	100.0
1995	1,603	1,608	99.7	94	94	100.0
1996	1,610	1,612	99.9	101	101	100.0
1997	1,590	1,595	99.7	104	104	100.0
1998	1,575	1,579	99.7	103	103	100.0
1999	1,547	1,551	99.7	101	101	100.0
2000	1,415	1,501	94.3	90	96	93.8
2001	1,483	1,489	99.6	95	95	100.0
2002	1,465	1,468	99.8	96	97	99.0
2003	1,391	1,395	99.7	92	92	100.0
2004	1,359	1,361	99.9	89	89	100.0
2005	1,315	1,319	99.7	85	85	100.0
2006	1,263	1,265	99.8	86	86	100.0
2007	1,234	1,236	99.8	82	82	100.0
2008	1,169	1,171	99.8	72	72	100.0
2009	1,125	1,129	99.6	68	68	100.0
2010	1,111	1,114	99.7	68	68	100.0
2011	1,062	1,066	99.6	61	61	100.0
2012	1,019	1,022	99.7	59	59	100.0
2013	1,008	1,011	99.7	58	58	100.0
2014	999	1,003	99.6	55	55	100.0
2015	973	974	99.9	51	51	100.0

Source: Compiled from "Air pollution in FY 2015, " Ministry of the Environment

6.21 Trends in annual average concentration of Nitrogen Dioxide (NO_2) and Nitrogen Monoxide (NO) (Ambient air pollution monitoring stations / Roadside air pollution monitoring stations)

	Ambient air pollution monitoring stations				Roadside air pollution monitoring stations			
	Nitrogen dioxide		Nitrogen monoxide		Nitrogen dioxide		Nitrogen monoxide	
	Annual average (ppm)	Number of monitoring stations	Annual average (ppm)	Number of monitoring stations	Annual average (ppm)	Number of monitoring stations	Annual average (ppm)	Number of monitoring stations
FY1977	0.019	891	0.012	886	0.037	195	0.059	195
1978	0.017	981	0.014	971	0.033	205	0.075	206
1979	0.016	1,080	0.012	1,075	0.033	213	0.070	213
1980	0.016	1,169	0.012	1,168	0.033	232	0.068	234
1981	0.015	1,215	0.012	1,210	0.032	246	0.068	246
1982	0.015	1,245	0.011	1,243	0.032	260	0.064	262
1983	0.015	1,283	0.010	1,280	0.031	274	0.060	274
1984	0.015	1,302	0.011	1,300	0.031	282	0.058	283
1985	0.014	1,309	0.011	1,306	0.030	281	0.057	280
1986	0.015	1,321	0.011	1,319	0.031	282	0.059	283
1987	0.016	1,324	0.012	1,323	0.032	289	0.060	289
1988	0.016	1,337	0.012	1,337	0.032	299	0.058	299
1989	0.016	1,357	0.012	1,356	0.032	307	0.057	307
1990	0.016	1,367	0.011	1,365	0.032	315	0.055	315
1991	0.017	1,378	0.013	1,378	0.033	325	0.056	325
1992	0.016	1,406	0.011	1,404	0.032	336	0.052	336
1993	0.017	1,420	0.012	1,419	0.032	346	0.052	346
1994	0.017	1,439	0.011	1,438	0.032	359	0.050	359
1995	0.017	1,453	0.011	1,453	0.032	369	0.050	369
1996	0.017	1,460	0.012	1,460	0.033	373	0.051	373
1997	0.017	1,457	0.012	1,457	0.032	385	0.049	385
1998	0.017	1,466	0.011	1,466	0.031	392	0.048	392
1999	0.016	1,460	0.010	1,460	0.030	394	0.045	394
2000	0.017	1,466	0.010	1,466	0.030	395	0.044	395
2001	0.016	1,465	0.010	1,465	0.030	399	0.043	399
2002	0.016	1,460	0.009	1,461	0.029	413	0.040	413
2003	0.016	1,454	0.009	1,454	0.029	426	0.037	426
2004	0.015	1,444	0.008	1,444	0.028	434	0.035	434
2005	0.015	1,424	0.007	1,424	0.027	437	0.032	437
2006	0.015	1,397	0.007	1,397	0.027	441	0.029	441
2007	0.013	1,397	0.006	1,397	0.025	431	0.027	431
2008	0.013	1,366	0.005	1,366	0.024	421	0.024	421
2009	0.012	1,351	0.005	1,351	0.023	423	0.021	423
2010	0.011	1,332	0.004	1,332	0.022	416	0.020	416
2011	0.011	1,308	0.004	1,308	0.021	411	0.019	411
2012	0.011	1,285	0.004	1,285	0.020	406	0.017	406
2013	0.010	1,278	0.003	1,278	0.020	405	0.016	405
2014	0.010	1,275	0.003	1,275	0.019	403	0.014	403
2015	0.010	1,253	0.003	1,253	0.019	400	0.013	400

Note:
The data show chronological changes of simple means of annual averages at valid stations.

Source: Compiled from "Air Pollution in FY 2015," Ministry of the Environment

6.22 Achievement situation of environmental quality standards for Nitrogen Dioxide (Ambient air pollution monitoring stations / Roadside traffic environment monitoring stations)

	Ambient air pollution monitoring stations			Roadside traffic environment monitoring stations		
	Number of monitoring stations recording levels that met criteria	Number of valid monitoring stations	Achievement rate (%)	Number of monitoring stations recording levels that met criteria	Number of valid monitoring stations	Achievement rate (%)
FY1985	1,289	1,309	98.5	215	280	76.8
1986	1,287	1,321	97.4	212	282	75.2
1987	1,244	1,324	94.0	181	289	62.6
1988	1,282	1,337	95.9	204	299	68.2
1989	1,292	1,357	95.2	201	307	65.5
1990	1,280	1,367	93.6	202	314	64.3
1991	1,297	1,378	94.1	204	325	62.8
1992	1,369	1,406	97.4	240	336	71.4
1993	1,356	1,420	95.5	232	346	67.1
1994	1,377	1,439	95.7	242	359	67.4
1995	1,417	1,453	97.5	260	369	70.5
1996	1,407	1,460	96.4	241	373	64.6
1997	1,389	1,457	95.3	253	385	65.7
1998	1,382	1,466	94.3	267	392	68.1
1999	1,444	1,460	98.9	310	394	78.7
2000	1,454	1,466	99.2	316	395	80.0
2001	1,451	1,465	99.0	317	399	79.4
2002	1,447	1,460	99.1	345	413	83.5
2003	1,453	1,454	99.9	365	426	85.7
2004	1,444	1,444	100.0	387	434	89.2
2005	1,423	1,424	99.9	399	437	91.3
2006	1,397	1,397	100.0	400	441	90.7
2007	1,379	1,379	100.0	407	431	94.4
2008	1,366	1,366	100.0	402	421	95.5
2009	1,351	1,351	100.0	405	423	95.7
2010	1,332	1,332	100.0	407	416	97.8
2011	1,308	1,308	100.0	409	411	99.5
2012	1,285	1,285	100.0	403	406	99.3
2013	1,278	1,278	100.0	401	405	99.0
2014	1,275	1,275	100.0	401	403	99.5
2015	1,253	1,253	100.0	399	400	99.5

Source: "Air Pollution in FY 2015," Ministry of the Environment

6.23 Achievement situation of environmental quality standards for Nitrogen Dioxide by prefecture (Ambient Air Pollution Monitoring Stations)

	FY 2010			FY 2011			FY 2012			FY 2013			FY 2014			FY 2015		
	Number of valid monitoring stations	Number of monitoring stations recording levels that met criteria	Achievement rate (%)	Number of valid monitoring stations	Number of monitoring stations recording levels that met criteria	Achievement rate (%)	Number of valid monitoring stations	Number of monitoring stations recording levels that met criteria	Achievement rate (%)	Number of valid monitoring stations	Number of monitoring stations recording levels that met criteria	Achievement rate (%)	Number of valid monitoring stations	Number of monitoring stations recording levels that met criteria	Achievement rate (%)	Number of valid monitoring stations	Number of monitoring stations recording levels that met criteria	Achievement rate (%)
Hokkaido	70	70	100.0	69	69	100.0	67	67	100.0	63	63	100.0	62	62	100.0	61	61	100.0
Aomori	14	14	100.0	14	14	100.0	14	14	100.0	13	13	100.0	13	13	100.0	13	13	100.0
Iwate	11	11	100.0	10	10	100.0	12	12	100.0	12	12	100.0	12	12	100.0	12	12	100.0
Miyagi	26	26	100.0	22	22	100.0	23	23	100.0	24	24	100.0	24	24	100.0	24	24	100.0
Akita	13	13	100.0	13	13	100.0	13	13	100.0	13	13	100.0	13	13	100.0	13	13	100.0
Yamagata	17	17	100.0	17	17	100.0	16	16	100.0	16	16	100.0	16	16	100.0	15	15	100.0
Fukushima	26	26	100.0	25	25	100.0	23	23	100.0	21	21	100.0	20	20	100.0	19	19	100.0
Ibaraki	47	47	100.0	45	45	100.0	38	38	100.0	40	40	100.0	42	42	100.0	33	33	100.0
Tochigi	18	18	100.0	17	17	100.0	17	17	100.0	17	17	100.0	17	17	100.0	17	17	100.0
Gunma	20	20	100.0	14	14	100.0	14	14	100.0	14	14	100.0	14	14	100.0	14	14	100.0
Saitama	55	55	100.0	56	56	100.0	56	56	100.0	54	54	100.0	54	54	100.0	53	53	100.0
Chiba	112	112	100.0	112	112	100.0	106	106	100.0	105	105	100.0	105	105	100.0	99	99	100.0
Tokyo	45	45	100.0	46	46	100.0	46	46	100.0	46	46	100.0	46	46	100.0	46	46	100.0
Kanagawa	61	61	100.0	61	61	100.0	61	61	100.0	60	60	100.0	60	60	100.0	60	60	100.0
Niigata	26	26	100.0	26	26	100.0	26	26	100.0	25	25	100.0	22	22	100.0	21	21	100.0
Toyama	17	17	100.0	15	15	100.0	14	14	100.0	14	14	100.0	14	14	100.0	14	14	100.0
Ishikawa	19	19	100.0	19	19	100.0	17	17	100.0	17	17	100.0	17	17	100.0	17	17	100.0
Fukui	22	22	100.0	22	22	100.0	22	22	100.0	22	22	100.0	22	22	100.0	18	18	100.0
Yamanashi	10	10	100.0	9	9	100.0	10	10	100.0	10	10	100.0	10	10	100.0	10	10	100.0
Nagano	16	16	100.0	14	14	100.0	15	15	100.0	15	15	100.0	15	15	100.0	15	15	100.0
Gifu	11	11	100.0	11	11	100.0	11	11	100.0	11	11	100.0	11	11	100.0	11	11	100.0
Shizuoka	50	50	100.0	49	49	100.0	47	47	100.0	49	49	100.0	48	48	100.0	48	48	100.0
Aichi	88	88	100.0	86	86	100.0	84	84	100.0	84	84	100.0	85	85	100.0	82	82	100.0
Mie	21	21	100.0	21	21	100.0	22	22	100.0	24	24	100.0	25	25	100.0	25	25	100.0
Shiga	9	9	100.0	8	8	100.0	9	9	100.0	10	10	100.0	10	10	100.0	10	10	100.0
Kyoto	26	26	100.0	26	26	100.0	24	24	100.0	25	25	100.0	24	24	100.0	24	24	100.0
Osaka	66	66	100.0	66	66	100.0	65	65	100.0	66	66	100.0	66	66	100.0	66	66	100.0
Hyogo	70	70	100.0	69	69	100.0	70	70	100.0	67	67	100.0	67	67	100.0	66	66	100.0
Nara	11	11	100.0	11	11	100.0	11	11	100.0	8	8	100.0	9	9	100.0	9	9	100.0
Wakayama	25	25	100.0	24	24	100.0	24	24	100.0	25	25	100.0	25	25	100.0	26	26	100.0
Tottori	3	3	100.0	3	3	100.0	3	3	100.0	3	3	100.0	3	3	100.0	3	3	100.0
Shimane	7	7	100.0	7	7	100.0	6	6	100.0	7	7	100.0	5	5	100.0	5	5	100.0
Okayama	44	44	100.0	44	44	100.0	44	44	100.0	44	44	100.0	44	44	100.0	44	44	100.0
Hiroshima	33	33	100.0	33	33	100.0	33	33	100.0	33	33	100.0	32	32	100.0	33	33	100.0
Yamaguchi	26	26	100.0	26	26	100.0	26	26	100.0	26	26	100.0	26	26	100.0	26	26	100.0
Tokushima	19	19	100.0	17	17	100.0	17	17	100.0	17	17	100.0	16	16	100.0	17	17	100.0
Kagawa	17	17	100.0	17	17	100.0	17	17	100.0	17	17	100.0	18	18	100.0	16	16	100.0
Ehime	12	12	100.0	12	12	100.0	12	12	100.0	12	12	100.0	12	12	100.0	12	12	100.0
Kochi	3	3	100.0	3	3	100.0	3	3	100.0	3	3	100.0	5	5	100.0	5	5	100.0
Fukuoka	37	37	100.0	38	38	100.0	38	38	100.0	38	38	100.0	38	38	100.0	42	42	100.0
Saga	11	11	100.0	11	11	100.0	11	11	100.0	11	11	100.0	13	13	100.0	13	13	100.0
Nagasaki	20	20	100.0	20	20	100.0	20	20	100.0	20	20	100.0	19	19	100.0	17	17	100.0
Kumamoto	27	27	100.0	28	28	100.0	27	27	100.0	28	28	100.0	28	28	100.0	28	28	100.0
Oita	22	22	100.0	22	22	100.0	22	22	100.0	22	22	100.0	20	20	100.0	24	24	100.0
Miyazaki	14	14	100.0	14	14	100.0	14	14	100.0	11	11	100.0	12	12	100.0	10	10	100.0
Kagoshima	10	10	100.0	10	10	100.0	10	10	100.0	10	10	100.0	10	10	100.0	10	10	100.0
Okinawa	5	5	100.0	6	6	100.0	5	5	100.0	6	6	100.0	6	6	100.0	7	7	100.0
Nationwide	1,332	1,332	100.0	1,308	1,308	100.0	1,285	1,285	100.0	1,278	1,278	100.0	1,275	1,275	100.0	1,253	1,253	100.0

Source: "Air Pollution in FY 2015," Ministry of the Environment

6.24 Achievement situation of environmental standards for Nitrogen Dioxide (NO_2) by prefecture (Roadside air pollution monitoring stations)

	2010			2011			2012			2013			2014			2015		
	Number of valid monitoring stations	Number of stations where standards were met	Achievement rate (%)	Number of valid monitoring stations	Number of stations where standards were met	Achievement rate (%)	Number of valid monitoring stations	Number of stations where standards were met	Achievement rate (%)	Number of valid monitoring stations	Number of stations where standards were met	Achievement rate (%)	Number of valid monitoring stations	Number of stations where standards were met	Achievement rate (%)	Number of valid monitoring stations	Number of stations where standards were met	Achievement rate (%)
Hokkaido	15	15	100.0	15	15	100.0	15	15	100.0	15	15	100.0	16	16	100.0	16	16	100.0
Aomori	4	4	100.0	4	4	100.0	4	4	100.0	4	4	100.0	4	4	100.0	4	4	100.0
Iwate	3	3	100.0	2	2	100.0	2	2	100.0	2	2	100.0	2	2	100.0	2	2	100.0
Miyagi	10	10	100.0	7	7	100.0	9	9	100.0	9	9	100.0	9	9	100.0	9	9	100.0
Akita	3	3	100.0	4	4	100.0	4	4	100.0	4	4	100.0	4	4	100.0	4	4	100.0
Yamagata	1	1	100.0	1	1	100.0	1	1	100.0	1	1	100.0	1	1	100.0	1	1	100.0
Fukushima	3	3	100.0	3	3	100.0	3	3	100.0	3	3	100.0	3	3	100.0	3	3	100.0
Ibaraki	4	4	100.0	4	4	100.0	4	4	100.0	4	4	100.0	4	4	100.0	4	4	100.0
Tochigi	10	10	100.0	11	11	100.0	11	11	100.0	11	11	100.0	11	11	100.0	11	11	100.0
Gunma	8	8	100.0	8	8	100.0	8	8	100.0	8	8	100.0	8	8	100.0	8	8	100.0
Saitama	28	28	100.0	27	27	100.0	27	27	100.0	27	27	100.0	27	27	100.0	27	27	100.0
Chiba	29	28	96.6	28	28	100.0	27	27	100.0	27	27	100.0	27	27	100.0	27	27	100.0
Tokyo	39	36	92.3	39	38	97.4	39	37	94.9	39	37	94.9	39	38	97.4	39	38	97.4
Kanagawa	31	28	90.3	31	30	96.8	31	30	96.8	31	31	100.0	30	29	96.7	30	30	100.0
Niigata	5	5	100.0	4	4	100.0	4	4	100.0	4	4	100.0	3	3	100.0	3	3	100.0
Toyama	7	7	100.0	7	7	100.0	7	7	100.0	7	7	100.0	7	7	100.0	7	7	100.0
Ishikawa	4	4	100.0	4	4	100.0	4	4	100.0	4	4	100.0	4	4	100.0	4	4	100.0
Fukui	4	4	100.0	4	4	100.0	4	4	100.0	4	4	100.0	4	4	100.0	3	3	100.0
Yamanashi	1	1	100.0	1	1	100.0	1	1	100.0	1	1	100.0	1	1	100.0	1	1	100.0
Nagano	7	7	100.0	7	7	100.0	7	7	100.0	7	7	100.0	7	7	100.0	7	7	100.0
Gifu	4	4	100.0	4	4	100.0	4	4	100.0	4	4	100.0	4	4	100.0	4	4	100.0
Shizuoka	10	10	100.0	10	10	100.0	9	9	100.0	9	9	100.0	9	9	100.0	10	10	100.0
Aichi	30	29	96.7	30	30	100.0	29	29	100.0	30	29	96.7	30	30	100.0	30	30	100.0
Mie	7	6	85.7	7	7	100.0	7	7	100.0	7	7	100.0	7	7	100.0	7	7	100.0
Shiga	5	5	100.0	5	5	100.0	4	4	100.0	4	4	100.0	4	4	100.0	4	4	100.0
Kyoto	9	9	100.0	8	8	100.0	7	7	100.0	7	7	100.0	7	7	100.0	7	7	100.0
Osaka	35	35	100.0	36	36	100.0	35	35	100.0	36	36	100.0	36	36	100.0	36	36	100.0
Hyogo	32	32	100.0	32	32	100.0	32	32	100.0	32	32	100.0	31	31	100.0	32	32	100.0
Nara	3	3	100.0	3	3	100.0	3	3	100.0	3	3	100.0	2	2	100.0	2	2	100.0
Wakayama	-	-	-	-	-	-	-	-	-	-	-	-	-	-	-	-	-	-
Tottori	2	2	100.0	2	2	100.0	2	2	100.0	2	2	100.0	2	2	100.0	2	2	100.0
Shimane	2	2	100.0	2	2	100.0	2	2	100.0	1	1	100.0	1	1	100.0	1	1	100.0
Okayama	10	10	100.0	10	10	100.0	10	10	100.0	10	10	100.0	10	10	100.0	10	10	100.0
Hiroshima	7	7	100.0	7	7	100.0	7	7	100.0	7	7	100.0	7	7	100.0	7	7	100.0
Yamaguchi	1	1	100.0	1	1	100.0	1	1	100.0	1	1	100.0	1	1	100.0	1	1	100.0
Tokushima	1	1	100.0	1	1	100.0	1	1	100.0	1	1	100.0	1	1	100.0	1	1	100.0
Kagawa	4	4	100.0	4	4	100.0	4	4	100.0	4	4	100.0	3	3	100.0	3	3	100.0
Ehime	1	1	100.0	1	1	100.0	1	1	100.0	1	1	100.0	1	1	100.0	1	1	100.0
Kochi	1	1	100.0	1	1	100.0	1	1	100.0	1	1	100.0	1	1	100.0	1	1	100.0
Fukuoka	16	16	100.0	16	16	100.0	16	16	100.0	15	14	93.3	16	16	100.0	15	15	100.0
Saga	2	2	100.0	2	2	100.0	2	2	100.0	2	2	100.0	2	2	100.0	-	-	-
Nagasaki	4	4	100.0	4	4	100.0	4	4	100.0	4	4	100.0	4	4	100.0	4	4	100.0
Kumamoto	3	3	100.0	3	3	100.0	3	3	100.0	3	3	100.0	3	3	100.0	3	3	100.0
Oita	2	2	100.0	2	2	100.0	2	2	100.0	2	2	100.0	2	2	100.0	2	2	100.0
Miyazaki	5	5	100.0	5	5	100.0	5	5	100.0	5	5	100.0	5	5	100.0	4	4	100.0
Kagoshima	2	2	100.0	2	2	100.0	2	2	100.0	2	2	100.0	2	2	100.0	2	2	100.0
Okinawa	2	2	100.0	2	2	100.0	1	1	100.0	-	-	-	1	1	100.0	1	1	100.0
Nationwide	416	407	97.8	411	409	99.5	406	403	99.3	405	401	99.0	403	401	99.5	400	399	99.8

Source: Compiled from "Air Pollution in FY 2015," Ministry of the Environment

6.25 Trends in annual average concentration of Suspended Particulate Matters (Ambient Air Pollution Monitoring Stations/Roadside Air Pollution Monitoring Stations)

（Unit: mg/㎥）

	Ambient Air Pollution Monitoring Stations	Roadside Air Pollution Monitoring Stations
FY1978	0.047	0.056
1979	0.044	0.054
1980	0.042	0.053
1981	0.039	0.062
1982	0.038	0.059
1983	0.034	0.053
1984	0.037	0.051
1985	0.035	0.048
1986	0.037	0.050
1987	0.037	0.050
1988	0.036	0.048
1989	0.036	0.049
1990	0.037	0.050
1991	0.037	0.050
1992	0.035	0.047
1993	0.034	0.045
1994	0.035	0.048
1995	0.034	0.047
1996	0.034	0.047
1997	0.033	0.046
1998	0.032	0.043
1999	0.028	0.037
2000	0.031	0.040
2001	0.030	0.038
2002	0.027	0.035
2003	0.026	0.033
2004	0.025	0.031
2005	0.027	0.031
2006	0.026	0.030
2007	0.024	0.027
2008	0.022	0.026
2009	0.021	0.024
2010	0.021	0.023
2011	0.020	0.022
2012	0.019	0.021
2013	0.020	0.022
2014	0.020	0.021
2015	0.019	0.020

Source: Compiled from "Air Pollution in FY 2015," Ministry of the Environment

6.26 Achievement situation of environmental quality standards for Suspended Particulate Matters (Ambient air pollution monitoring stations / Roadside air pollution monitoring stations)

	Ambient Air Pollution Monitoring Stations			Roadside Air Pollution Monitoring Stations		
	Number of stations where standards were met	Number of valid monitoring stations	Achievement rate (%)	Number of stations where standards were met	Number of valid monitoring stations	Achievement rate (%)
FY1985	393	755	52.1	17	66	25.8
1986	486	855	56.8	21	74	28.4
1987	504	956	52.7	26	90	28.9
1988	515	1,094	47.1	31	119	26.1
1989	784	1,203	65.2	55	148	37.2
1990	552	1,282	43.1	33	156	21.2
1991	670	1,349	49.7	50	166	30.1
1992	811	1,409	57.6	61	182	33.5
1993	839	1,441	58.2	77	190	40.5
1994	918	1,485	61.8	69	210	32.9
1995	960	1,511	63.5	76	216	35.2
1996	1,070	1,533	69.8	97	229	42.4
1997	944	1,526	61.9	85	250	34.0
1998	1,029	1,528	67.3	96	269	35.7
1999	1,378	1,529	90.1	215	282	76.2
2000	1,292	1,529	84.4	199	301	66.1
2001	1,025	1,539	66.6	150	319	47.0
2002	807	1,538	52.5	123	359	34.3
2003	1,410	1,520	92.8	301	390	77.2
2004	1,486	1,508	98.5	393	409	96.1
2005	1,426	1,480	96.4	385	411	93.7
2006	1,363	1,465	93.0	388	418	92.8
2007	1,295	1,447	89.5	365	412	88.6
2008	1,416	1,422	99.6	400	403	99.3
2009	1,370	1,386	98.8	404	406	99.5
2010	1,278	1,374	93.0	371	399	93.0
2011	927	1,340	69.2	288	395	72.9
2012	1,316	1,320	99.7	393	394	99.7
2013	1,288	1,324	97.3	372	393	94.7
2014	1,318	1,322	99.7	393	393	100.0
2015	1,297	1,302	99.6	390	391	99.7

Source: Compiled from "Air Pollution in FY 2015," Ministry of the Environment

6.27 Trends in annual average concentration of Particulate Matters

	Ambient Air Pollution Monitoring Stations		Roadside Air Pollution Monitoring Stations	
	Annual average (μg/m³)	Number of stations	Annual average (μg/m³)	Number of stations
FY 2010	15.1	34	17.2	12
2011	15.4	105	16.1	51
2012	14.5	312	15.4	123
2013	15.3	492	16	181
2014	14.7	672	15.5	198
2015	13.1	765	13.9	219

Achievement situation of environmental quality standards for Suspended Particulate Matters

	Ambient Air Pollution Monitoring Stations			Roadside Air Pollution Monitoring Stations		
	Number of monitoring stations recording levels that met criteria	Number of valid monitoring stations	Achievement rate (%)	Number of monitoring stations recording levels that met criteria	Number of valid monitoring stations	Achievement rate (%)
FY 2010	11	34	32.4	1	12	8.3
2011	29	105	27.6	15	51	29.4
2012	135	312	43.3	41	123	33.3
2013	79	492	16.1	24	181	13.3
2014	254	672	37.8	51	198	25.8
2015	570	765	74.5	128	219	58.4

Source: Compiled from "Air contamination in FY 2015," Ministry of the Environment

6.28 Achievement situation of environmental quality standards for Suspended Particulate Matters by prefecture (Ambient Air Pollution Monitoring Stations)

	FY2010			20011			2012			2013			2014			2015		
	Number of valid monitoring stations	Number of monitoring stations recording levels that met criteria	Achievement rate (%)	Number of valid monitoring stations	Number of monitoring stations recording levels that met criteria	Achievement rate (%)	Number of valid monitoring stations	Number of monitoring stations recording levels that met criteria	Achievement rate (%)	Number of valid monitoring stations	Number of monitoring stations recording levels that met criteria	Achievement rate (%)	Number of valid monitoring stations	Number of monitoring stations recording levels that met criteria	Achievement rate (%)	Number of valid monitoring stations	Number of monitoring stations recording levels that met criteria	Achievement rate (%)
Hokkaido	60	60	100.0	58	57	98.3	57	57	100.0	53	53	100.0	50	49	98.0	49	49	100.0
Aomori	14	14	100.0	14	14	100.0	14	14	100.0	14	14	100.0	14	14	100.0	14	14	100.0
Iwate	8	8	100.0	8	8	100.0	8	8	100.0	8	8	100.0	8	8	100.0	8	8	100.0
Miyagi	27	27	100.0	23	23	100.0	23	23	100.0	26	25	96.2	25	25	100.0	27	27	100.0
Akita	17	17	100.0	17	17	100.0	17	17	100.0	17	17	100.0	17	17	100.0	17	17	100.0
Yamagata	17	17	100.0	17	17	100.0	16	16	100.0	16	16	100.0	16	16	100.0	16	16	100.0
Fukushima	23	23	100.0	22	22	100.0	24	24	100.0	27	27	100.0	27	27	100.0	27	27	100.0
Ibaraki	46	46	100.0	45	45	100.0	37	37	100.0	44	41	93.2	45	45	100.0	35	35	100.0
Tochigi	24	24	100.0	22	22	100.0	23	23	100.0	23	23	100.0	21	21	100.0	20	20	100.0
Gunma	22	22	100.0	16	16	100.0	17	17	100.0	15	15	100.0	18	18	100.0	18	18	100.0
Saitama	55	55	100.0	56	56	100.0	55	55	100.0	55	54	98.2	55	55	100.0	55	55	100.0
Chiba	110	110	100.0	111	110	99.1	104	104	100.0	103	88	85.4	103	103	100.0	96	96	100.0
Tokyo	47	47	100.0	48	48	100.0	48	48	100.0	48	47	97.9	48	48	100.0	48	48	100.0
Kanagawa	61	61	100.0	61	61	100.0	61	61	100.0	60	56	93.3	60	59	98.3	60	60	100.0
Niigata	26	26	100.0	22	22	100.0	22	22	100.0	20	20	100.0	19	19	100.0	20	20	100.0
Toyama	22	22	100.0	20	20	100.0	19	19	100.0	19	19	100.0	19	19	100.0	19	19	100.0
Ishikawa	19	19	100.0	19	19	100.0	18	18	100.0	18	18	100.0	18	18	100.0	18	18	100.0
Fukui	26	26	100.0	26	26	100.0	26	26	100.0	26	26	100.0	26	26	100.0	21	21	100.0
Yamanashi	10	10	100.0	10	10	100.0	10	10	100.0	10	8	80.0	10	10	100.0	10	10	100.0
Nagano	14	14	100.0	10	10	100.0	10	10	100.0	10	10	100.0	10	10	100.0	10	10	100.0
Gifu	15	15	100.0	14	12	85.7	14	14	100.0	14	14	100.0	14	14	100.0	14	13	92.9
Shizuoka	47	47	100.0	47	44	93.6	44	44	100.0	44	44	100.0	43	43	100.0	41	41	100.0
Aichi	96	96	100.0	92	46	50.0	91	91	100.0	88	87	98.9	87	87	100.0	87	86	98.9
Mie	21	21	100.0	21	8	38.1	22	22	100.0	24	24	100.0	25	25	100.0	25	25	100.0
Shiga	9	9	100.0	8	7	87.5	9	9	100.0	9	9	100.0	9	9	100.0	9	9	100.0
Kyoto	25	25	100.0	25	12	48.0	22	22	100.0	23	23	100.0	22	22	100.0	22	22	100.0
Osaka	67	67	100.0	67	12	17.9	66	66	100.0	67	67	100.0	67	67	100.0	67	67	100.0
Hyogo	68	68	100.0	66	48	72.7	68	68	100.0	67	64	95.5	67	67	100.0	64	63	98.4
Nara	11	11	100.0	11	5	45.5	11	11	100.0	11	11	100.0	11	11	100.0	10	10	100.0
Wakayama	31	31	100.0	31	15	48.4	29	29	100.0	30	29	96.7	31	31	100.0	31	30	96.8
Tottori	3	3	100.0	3	3	100.0	3	3	100.0	3	3	100.0	4	4	100.0	4	4	100.0
Shimane	7	7	100.0	7	4	57.1	7	7	100.0	7	7	100.0	7	7	100.0	7	7	100.0
Okayama	42	26	61.9	42	13	31.0	42	42	100.0	42	42	100.0	42	42	100.0	41	40	97.6
Hiroshima	32	24	75.0	32	15	46.9	32	32	100.0	32	32	100.0	32	32	100.0	32	32	100.0
Yamaguchi	32	24	75.0	32	7	21.9	32	32	100.0	32	32	100.0	32	32	100.0	32	32	100.0
Tokushima	18	18	100.0	17	13	76.5	17	17	100.0	17	17	100.0	17	17	100.0	17	17	100.0
Kagawa	16	7	43.8	17	5	29.4	17	16	94.1	17	17	100.0	18	18	100.0	18	18	100.0
Ehime	25	25	100.0	25	5	20.0	25	25	100.0	25	25	100.0	24	24	100.0	24	24	100.0
Kochi	5	5	100.0	5	5	100.0	5	5	100.0	5	5	100.0	8	8	100.0	8	8	100.0
Fukuoka	42	11	26.2	42	0	0.0	42	41	97.6	41	40	97.6	42	42	100.0	45	45	100.0
Saga	13	13	100.0	13	4	30.8	13	13	100.0	13	13	100.0	15	15	100.0	14	14	100.0
Nagasaki	20	9	45.0	20	2	10.0	20	20	100.0	20	20	100.0	18	18	100.0	17	17	100.0
Kumamoto	29	19	65.5	29	1	3.4	29	29	100.0	27	27	100.0	28	28	100.0	29	29	100.0
Oita	22	22	100.0	22	6	27.3	22	22	100.0	22	22	100.0	20	20	100.0	24	24	100.0
Miyazaki	10	7	70.0	10	9	90.0	10	10	100.0	11	10	90.9	9	9	100.0	10	10	100.0
Kagoshima	15	15	100.0	15	2	13.3	15	13	86.7	15	13	86.7	15	13	86.7	15	15	100.0
Okinawa	5	5	100.0	2	1	50.0	4	4	100.0	6	6	100.0	6	6	100.0	7	7	100.0
Nationwide	1,374	1,278	93.0	1,340	927	69.2	1,320	1,316	99.7	1,324	1,288	97.3	1,322	1,318	99.7	1,302	1,297	99.6

Source: Compiled from "Air Pollution in FY 2015," Ministry of the Environment

6.29 Achievement situation of environmental quality standards for Suspended Particulate Matters by prefecture (Roadside Air Pollution Monitoring Stations)

	FY2010			2011			2012			2013			2014			2015		
	Number of valid monitoring stations	Number of stations where standards were met	Achievement rate (%)	Number of valid monitoring stations	Number of stations where standards were met	Achievement rate (%)	Number of valid monitoring stations	Number of stations where standards were met	Achievement rate (%)	Number of valid monitoring stations	Number of stations where standards were met	Achievement rate (%)	Number of valid monitoring stations	Number of stations where standards were met	Achievement rate (%)	Number of valid monitoring stations	Number of stations where standards were met	Achievement rate (%)
Hokkaido	16	16	100.0	17	17	100.0	17	17	100.0	17	17	100.0	18	18	100.0	18	18	100.0
Aomori	4	4	100.0	4	4	100.0	4	4	100.0	4	4	100.0	4	4	100.0	4	4	100.0
Iwate	3	3	100.0	2	2	100.0	2	2	100.0	2	2	100.0	2	2	100.0	2	2	100.0
Miyagi	9	9	100.0	8	8	100.0	9	9	100.0	9	9	100.0	9	9	100.0	9	9	100.0
Akita	3	3	100.0	3	3	100.0	3	3	100.0	3	3	100.0	3	3	100.0	3	3	100.0
Yamagata	1	1	100.0	1	1	100.0	1	1	100.0	1	1	100.0	1	1	100.0	1	1	100.0
Fukushima	3	3	100.0	3	3	100.0	3	3	100.0	3	3	100.0	3	3	100.0	3	3	100.0
Ibaraki	4	4	100.0	4	4	100.0	4	4	100.0	4	3	75.0	4	4	100.0	4	4	100.0
Tochigi	10	10	100.0	11	11	100.0	11	11	100.0	11	10	90.9	11	11	100.0	11	11	100.0
Gunma	6	6	100.0	7	7	100.0	7	7	100.0	7	7	100.0	7	7	100.0	7	7	100.0
Saitama	25	25	100.0	23	22	95.7	26	26	100.0	27	27	100.0	27	27	100.0	27	27	100.0
Chiba	28	28	100.0	28	28	100.0	26	26	100.0	26	19	73.1	26	26	100.0	26	26	100.0
Tokyo	38	38	100.0	38	37	97.4	38	38	100.0	38	36	94.7	38	38	100.0	38	38	100.0
Kanagawa	31	30	96.8	31	31	100.0	31	31	100.0	31	27	87.1	30	30	100.0	30	30	100.0
Niigata	5	5	100.0	3	3	100.0	3	3	100.0	3	3	100.0	3	3	100.0	3	3	100.0
Toyama	7	7	100.0	7	7	100.0	7	7	100.0	7	7	100.0	7	7	100.0	7	7	100.0
Ishikawa	4	4	100.0	4	4	100.0	4	4	100.0	4	4	100.0	4	4	100.0	4	4	100.0
Fukui	4	4	100.0	4	4	100.0	4	4	100.0	4	4	100.0	4	4	100.0	3	3	100.0
Yamanashi	2	2	100.0	2	2	100.0	2	2	100.0	2	2	100.0	2	2	100.0	2	2	100.0
Nagano	7	7	100.0	7	7	100.0	7	7	100.0	7	7	100.0	6	6	100.0	7	7	100.0
Gifu	4	4	100.0	4	4	100.0	4	4	100.0	4	4	100.0	4	4	100.0	4	4	100.0
Shizuoka	10	10	100.0	10	10	100.0	9	9	100.0	9	9	100.0	9	9	100.0	10	10	100.0
Aichi	30	30	100.0	30	15	50.0	29	29	100.0	29	28	96.6	30	30	100.0	30	30	100.0
Mie	7	7	100.0	7	4	57.1	7	7	100.0	7	7	100.0	7	7	100.0	7	7	100.0
Shiga	4	4	100.0	4	3	75.0	4	4	100.0	4	4	100.0	4	4	100.0	3	3	100.0
Kyoto	9	9	100.0	8	4	50.0	7	7	100.0	7	7	100.0	7	7	100.0	7	7	100.0
Osaka	33	33	100.0	34	9	26.5	33	33	100.0	34	32	94.1	34	34	100.0	34	33	97.1
Hyogo	28	27	96.4	28	20	71.4	28	28	100.0	28	26	92.9	27	27	100.0	29	29	100.0
Nara	3	3	100.0	3	2	66.7	3	3	100.0	3	3	100.0	3	3	100.0	3	3	100.0
Wakayama	–	–	–	–	–	–	–	–	–	–	–	–	–	–	–	–	–	–
Tottori	2	2	100.0	2	2	100.0	2	1	50.0	2	1	50.0	2	2	100.0	2	2	100.0
Shimane	2	2	100.0	2	1	50.0	2	2	100.0	1	1	100.0	1	1	100.0	1	1	100.0
Okayama	9	6	66.7	9	5	55.6	9	9	100.0	9	9	100.0	9	9	100.0	9	9	100.0
Hiroshima	7	3	42.9	7	0	0.0	7	7	100.0	7	7	100.0	7	7	100.0	7	7	100.0
Yamaguchi	1	1	100.0	1	0	0.0	1	1	100.0	1	1	100.0	1	1	100.0	1	1	100.0
Tokushima	1	1	100.0	1	0	0.0	1	1	100.0	1	1	100.0	1	1	100.0	1	1	100.0
Kagawa	3	1	33.3	3	0	0.0	3	3	100.0	3	3	100.0	3	3	100.0	3	3	100.0
Ehime	1	1	100.0	1	0	0.0	1	1	100.0	1	1	100.0	1	1	100.0	1	1	100.0
Kochi	1	1	100.0	1	0	0.0	1	1	100.0	1	1	100.0	1	1	100.0	1	1	100.0
Fukuoka	16	5	31.3	16	1	6.3	16	16	100.0	15	15	100.0	16	16	100.0	15	15	100.0
Saga	2	1	50.0	2	0	0.0	2	2	100.0	2	2	100.0	2	2	100.0	–	–	–
Nagasaki	3	0	0.0	3	0	0.0	3	3	100.0	3	3	100.0	3	3	100.0	3	3	100.0
Kumamoto	3	2	66.7	3	0	0.0	3	3	100.0	3	3	100.0	3	3	100.0	3	3	100.0
Oita	2	2	100.0	2	0	0.0	2	2	100.0	2	2	100.0	2	2	100.0	2	2	100.0
Miyazaki	5	4	80.0	5	3	60.0	5	5	100.0	5	5	100.0	5	5	100.0	4	4	100.0
Kagoshima	2	2	100.0	2	0	0.0	2	2	100.0	2	2	100.0	2	2	100.0	2	2	100.0
Okinawa	1	1	100.0	–	–	–	1	1	100.0	–	–	–	–	–	–	–	–	–
Nationwide	399	371	93.0	395	288	72.9	394	393	99.7	393	372	94.7	393	393	100.0	391	390	99.7

Source: Compiled from "Air Pollution in FY 2015," Ministry of the Environment

6.30 Trends in annual average concentration of Carbon Monoxide (Ambient Air Pollution Monitoring Stations/Roadside Air Pollution Monitoring Stations)

	Ambient Air Pollution Monitoring Stations		Roadside Air Pollution Monitoring Stations	
	Annual average (ppm)	Number of stations	Annual average (ppm)	Number of stations
FY1977	1.2	163	2.8	287
1978	1.1	185	2.6	296
1979	1.0	200	2.3	322
1980	0.9	205	2.2	334
1981	0.9	200	1.9	282
1982	0.8	205	1.9	304
1983	0.7	189	1.7	297
1984	0.7	193	1.6	300
1985	0.7	191	1.6	299
1986	0.7	191	1.6	299
1987	0.7	187	1.6	304
1988	0.7	187	1.5	301
1989	0.7	189	1.5	305
1990	0.7	186	1.4	311
1991	0.7	190	1.4	314
1992	0.6	195	1.2	317
1993	0.6	187	1.2	328
1994	0.6	183	1.1	339
1995	0.6	185	1.1	343
1996	0.6	184	1.1	342
1997	0.6	150	1.0	329
1998	0.5	145	0.9	327
1999	0.5	138	0.9	319
2000	0.5	134	0.8	314
2001	0.5	131	0.8	312
2002	0.4	126	0.7	309
2003	0.4	99	0.7	302
2004	0.4	96	0.6	306
2005	0.4	91	0.6	304
2006	0.4	86	0.6	294
2007	0.4	78	0.5	291
2008	0.3	73	0.5	276
2009	0.3	71	0.5	270
2010	0.3	70	0.5	258
2011	0.3	70	0.5	258
2012	0.3	68	0.4	241
2013	0.3	60	0.4	243
2014	0.3	59	0.4	241
2015	0.3	57	0.4	230

Source: Compiled from "Air Pollution in FY 2015," Ministry of the Environment

6.31 Trends in annual average concentration of Non-Methane Hydrocarbon (Ambient Air Pollution Monitoring Stations / Roadside Air Pollution Monitoring Stations)

Annual Averages from 6 a.m. to 9 a.m. (ppmC)

	Ambient Air Pollution Monitoring Stations	Roadside Air Pollution Monitoring Stations
FY1985	0.35	0.57
1986	0.34	0.56
1987	0.35	0.57
1988	0.34	0.57
1989	0.33	0.53
1990	0.32	0.54
1991	0.32	0.52
1992	0.29	0.47
1993	0.27	0.42
1994	0.27	0.42
1995	0.26	0.40
1996	0.27	0.40
1997	0.26	0.38
1998	0.26	0.37
1999	0.24	0.35
2000	0.24	0.35
2001	0.23	0.34
2002	0.22	0.31
2003	0.22	0.31
2004	0.21	0.29
2005	0.21	0.28
2006	0.20	0.27
2007	0.19	0.25
2008	0.18	0.23
2009	0.17	0.22
2010	0.16	0.21
2011	0.16	0.19
2012	0.14	0.18
2013	0.14	0.18
2014	0.14	0.17
2015	0.13	0.16

Source: Compiled from "Air Pollution in FY 2015," Ministry of the Environment

6.32 Changes in nationwide average concentration of hazardous air pollutants to which environmental standards are applied

（Unit：μg/㎥）

	Benzene	Trichloroethylene	Tetrachloroethylene	Dichloromethane
FY2008	1.4	0.65	0.23	2.3
2009	1.3	0.53	0.22	1.7
2010	1.1	0.44	0.17	1.6
2011	1.2	0.53	0.18	1.6
2012	1.2	0.50	0.18	1.6
2013	1.1	0.53	0.15	1.6
2014	1.0	0.51	0.15	1.5
2015	1.0	0.48	0.14	1.7

Source: Compiled from "Monitoring Results of Hazardous Air Pollutants," Ministry of the Environment

6.33 Achievement of the Environmental Quality Standards for designated Hazardous Air Pollutants

（Unit：%）

	Benzene	Trichloroethylene	Tetrachloroethylene	Dichloromethane
FY2008	99.8	100	100	100
2009	99.8	100	100	100
2010	100	100	100	100
2011	99.5	100	100	100
2012	100	100	100	100
2013	99.8	100	100	100
2014	100	100	100	100
2015	100	100	100	100

Source: Compiled from "Monitoring Results of Hazardous Air Pollutants," Ministry of the Environment

6.34 Changes in nationwide averages of concentration of hazardous air pollutants for which guideline values are set

	Acrylonitrile	Vinyl chloride monomer	Chloroform	1,2-dichloroethane	Mercury and its compounds	Nickel compounds	Arsenic and its compounds	1,3-butadiene	Manganese and its compounds
	μg/m³	μg/m³	μg/m³	μg/m³	ngHg/m³	ngNi/m³	ngAs/m³	μg/m³	ngMn/m³
FY2008	0.093	0.053	0.22	0.16	2.1	4.9	1.6	0.18	30
2009	0.079	0.066	0.21	0.17	2.0	4.2	1.5	0.16	27
2010	0.073	0.055	0.19	0.16	2.0	4.0	1.4	0.14	25
2011	0.088	0.053	0.21	0.18	2.1	4.4	1.6	0.15	25
2012	0.080	0.047	0.20	0.17	2.1	4.1	1.5	0.14	24
2013	0.077	0.032	0.21	0.17	2.0	4.3	1.7	0.12	25
2014	0.070	0.046	0.23	0.20	2.0	4.1	1.6	0.11	24
2015	0.083	0.041	0.26	0.19	1.9	3.6	1.6	0.11	24

Note:
Guideline values for Arsenic and its compounds were set based on the Ninth recommendations, a report submitted by Central Environment Council in Oct, 2010. Guideline values for Manganese and its compounds were set based on the Tenth recommendations, a report submitted by Central Environment Council in April, 2014.

Source: Compiled from "Monitoring Results of Hazardous Air Pollutants," Ministry of the Environment

6.35 Changes in nationwide averages of concentration of hazardous air pollutants for which guidelines are set

(Unit:%)

	Acrylonitrile	Vinyl chloride monomer	Chloroform	1,2-dichloroethane	Mercury and its compounds	Nickel compounds	Arsenic and its compounds	1,3-butadiene	Manganese and its compounds
FY2008	99.7	100	100	99.7	100	99.7	-	100	-
2009	100	100	100	99.2	100	99.7	98.6	100	-
2010	100	100	100	100	100	100	98.9	100	-
2011	100	100	100	99.1	100	100	98.1	100	-
2012	100	100	100	99.4	100	100	98.6	100	-
2013	100	100	100	100	100	99.6	98.5	100	99.2
2014	100	100	100	99.4	100	99.6	97.9	100	100
2015	99.7	100	100	99.4	100	99.6	97,2	100	99.3

Note:
Guideline values for Arsenic and its compounds were set based on the Ninth recommendations, a report submitted by Central Environment Council in Oct, 2010.
Guideline values for Manganese and its compounds were set based on the Tenth recommendations, a report submitted by Central Environment Council in April, 2014.

Source: Compiled from "Monitoring Results of Hazardous Air Pollutants," Ministry of the Environment

6.36 Trends in number of days when photochemical oxidant alerts and warnings were issued and reported damages

	Alert/warning issuance		Damage reported	
	Number of prefectures	Total number of days	Number of prefectures	Total number of people
FY1973	21	328(2)	19	31,936
1974	22	288(2)	16	14,725
1975	21	266(5)	17	46,081
1976	21	150(0)	15	4,215
1977	19	167(0)	11	2,669
1978	22	169(3)	12	5,376
1979	16	84(0)	9	4,083
1980	16	86(0)	9	1,420
1981	9	59(0)	8	780
1982	13	73(0)	9	446
1983	17	131(0)	9	1,721
1984	16	135(1)	6	5,822
1985	16	171(0)	10	966
1986	15	85(0)	3	48
1987	18	168(0)	7	1,056
1988	16	86(0)	5	132
1989	17	63(0)	6	36
1990	22	242(0)	5	58
1991	15	121(0)	6	1,454
1992	16	164(0)	7	307
1993	15	71(0)	3	93
1994	19	175(0)	6	564
1995	19	139(0)	5	192
1996	18	99(0)	5	64
1997	20	95(0)	5	315
1998	22	135(0)	9	1,270
1999	19	100(0)	6	402
2000	22	259(0)	12	1,479
2001	20	193(0)	8	343
2002	23	184(2)	9	1,347
2003	19	108(0)	5	254
2004	22	189(0)	9	393
2005	21	185(1)	10	1,495
2006	25	177(0)	8	289
2007	28	220(0)	14	1,910
2008	25	144(0)	10	400
2009	28	123(0)	12	910
2010	22	182(0)	10	128
2011	18	82(0)	4	69
2012	17	53(0)	3	80
2013	18	106(0)	3	78
2014	15	83(0)	2	33
2015	17	101(0)	1	2
2016	16	46(0)	2	46

Note:
Parenthesized figures refer to number of days where alert/warning(s) were issued and they are included in the Total numbers.

Source: Compiled from "Reports on photochemical air pollutants in 2016," Ministry of the Environment

6.37 Trends in number of days when photochemical oxidant alerts and warnings were issued by prefecture (1)

(Unit: Day)

	1972	1973	1974	1975	1976	1977	1978	1979	1980	1981	1982	1983	1984	1985	1986	1987	1988	1989	1990	1991	1992
Miyagi		3								1											
Yamagata																					
Fukushima																					
Ibaraki	16	21	14	17	9	18	12	3	4		3	2	6	16	7	22	3	5	21	19	14
Tochigi		10	10	6	7	11	5	2	2			1	4	15	6	16	8	3	7	5	19
Gunma		1	4	11	1		3					1					3	3	12	2	9
Saitama	15	45	29	44	15	26	36	8	15	8	12	33	30	28	16	29	12	6	25	14	19
Chiba	21	28	26	33	21	7	14	11	13	8	8	20	16	17	8	21	4	6	17	20	19
Tokyo	33	45	26	41	17	21	22	12	13	14	17	24	35	19	9	15	7	7	23	15	14
Kanagawa	31	30	26	27	17	12	18	19	10	11	11	15	7	12	3	12	8	3	12	12	14
Niigata																					
Toyama							1														
Ishikawa								1													
Fukui							1												3		
Yamanashi								2		1						3	4	4	23	9	20
Nagano																					
Gifu													1								
Shizuoka		8	15	6	3	1	1	3	2		1	1	2	5	1	1	1		7	6	2
Aichi	5	8	2	6	3	2			1			2	2	6		2				2	1
Mie	4	6	7		3	1					1		1			5	8	1	10	1	4
Shiga		4	4	4	5	1	1	5	6		5	1		2		4	5	4	5	3	9
Kyoto	7	17	17	11	6	9	5	1	5	3	3	5	4	5	3	3	5	2	6		7
Osaka	18	26	27	23	25	25	16	12	10	12	8	8	9	19	16	21	8	10	27	8	11
Hyogo	19	23	19	11	3	4	2	1	1	1	1	5	7	13	3	5	1	2	7	4	1
Nara	1	6	3	9	3	3	3		1			1			1	2		2	6		1
Wakayama	1	1	1													1			1		
Tottori																					
Shimane																					
Okayama	3	14	16	5	1	5	8	1	1		2	7	8	8	2	3	2	1	8		
Hiroshima		9	18	4	1	6	9	1	1		1	3	2	3	6	3	7	3	14	1	
Yamaguchi			5	1	2	5	3							2							
Tokushima			2	2	3	3	1							1	2				1		
Kagawa		1	4	1			6					2	1		2			1			
Ehime	2	22	13	1	4	7	1	2	1										3		
Kochi																					
Fukuoka																			4		
Saga																					
Nagasaki																					
Kumamoto																					
Oita																					
Kagoshima																					
Nationwide	176	328	288	266	150	167	169	84	86	59	73	131	135	171	85	168	86	63	242	121	164

6.37 Trends in number of days when photochemical oxidant alerts and warnings were issued by prefecture (2)

(Unit: Day)

	1993	1994	1995	1996	1997	1998	1999	2000	2001	2002	2003	2004	2005	2006	2007	2008	2009	2010	2011	2012	2013	2014	2015	2016
Miyagi					1			1																
Yamagata																	1							
Fukushima								3		1		2	1	1			3	1					1	
Ibaraki	7	14	16	10	9	5	11	23	12	13	14	18	13	10	15	5	6	14	2	3	5	9	2	
Tochigi	2	10	2	6	4	4	9	21	15	11	8	7	14	8	16	5	7	16	11	2	4	5	2	3
Gunma	8	18	16	18	8	6	4	16	6	15	2	15	10	5	8	11	6	12	10	4	6	10	9	2
Saitama	4	19	13	10	16	12	18	40	30	21	19	23	26	16	32	18	14	25	17	7	13	13	16	1
Chiba	6	14	22	6	13	8	9	18	23	21	11	28	28	11	17	12	3	15	11	8	14	12	15	2
Tokyo	5	12	19	6	11	11	5	23	23	19	8	18	22	17	17	19	7	20	9	4	17	9	14	5
Kanagawa	9	15	13	7	4	10	4	10	13	11	6	16	7	14	20	11	4	10	5	5	16	9	10	6
Niigata															1									
Toyama			1							1		2			1									
Ishikawa																								
Fukui										1														
Yamanashi	7	8	5	4	2	7	6	14	13	12	5	5	9	12	15	4	3	11	2	2	3	6	1	1
Nagano																1								
Gifu									4	3		3	1	4	2	4	3			1				1
Shizuoka	3	8	2	3	4	6	2	9	6	4	1	5		9	7	2	2	3	1	1	2	1		1
Aichi		1				1					1		1	2	5	9	9	1	1	2	1		1	
Mie		9	2	1	1	2	1	9	4			1	2	2				2		1	1			
Shiga	1		1			1	2	3	6	4	2	2	7	6	5	2	6	4	1		3			1
Kyoto		1		1	1	3	1	3	1	5		3	7	7	10	6	4	11	1	2	3	1	2	
Osaka	11	15	8	10	3	25	11	23	20	11	14	10	10	17	11	7	13	12	4	4	7	3	11	7
Hyogo	4	13	3	4	2	4	7	17	5	8	7	6	9	8	4	6	5	2		1	2	2	2	1
Nara	1		3			1		8	2	5	2	5	7	3		1	1	2	1			1	2	
Wakayama		1	1	1	1	1		2	1	1				1	1	1						1		
Tottori																								
Shimane																								
Okayama	2	6	6	3	4	4	2	1	2	3	1		1	8	6	6	4	9	3	5	7	1	9	7
Hiroshima		9	3	6	4	15	3	8	5	9	4	13	8	9	6	5	6	7	1		1		3	6
Yamaguchi						2	1	5		4	1	3	1	2	3	4	1							
Tokushima			3	2	3	6	3	2	2	1	1	3	1	3	2	1								
Kagawa		1													1								1	1
Ehime	1	1			3	1	1				1	1			3	1	3	3						
Kochi																								
Fukuoka				1	1										4	2	2			1				1
Saga																1	2	1			1			
Nagasaki														1	3		2	1	1					
Kumamoto														1	4		2							
Oita															1		3							
Kagoshima																	1							
Nationwide	71	175	139	99	95	135	100	259	193	184	108	189	185	177	220	144	123	182	81	53	106	83	101	46

Source: Compiled from "Report on photochemical air pollutants in 2016," Ministry of the Environment

6.38 Changes in the number of specified facilities under the Noise Regulation Law

(Unit: Facilities)

	Metalworking machinery	Air compressor etc.	Crusher for soil and stones, etc.	Loom	Machinery for manufacturing construction materials	Grain mill	Wood processing machinery	Paper-making machinery	Printing press	Injection molding machinery for plastics	Molding machinery	Total
FY1987	247,914	396,212	22,625	476,521	8,943	3,783	69,691	2,115	80,803	46,291	8,265	1,363,163
1988	250,700	408,377	22,774	480,189	5,631	3,735	69,966	2,100	81,419	47,267	8,213	1,380,371
1989	254,680	421,494	22,981	477,278	5,741	3,662	70,127	2,090	82,249	48,327	8,259	1,396,888
1990	259,025	434,787	23,268	471,711	5,815	3,829	69,773	2,162	82,547	49,629	8,189	1,410,735
1991	259,719	450,215	23,648	472,173	5,950	3,662	69,887	2,118	82,924	50,581	8,207	1,429,084
1992	261,136	463,494	24,117	468,229	5,914	3,687	69,967	2,166	82,839	51,392	8,034	1,440,975
1993	260,226	476,886	24,637	466,376	5,933	3,698	69,909	2,178	82,320	51,236	7,920	1,451,319
1994	267,836	490,410	24,389	459,363	6,091	3,748	69,863	2,142	81,924	52,153	7,914	1,465,833
1995	265,720	500,969	24,523	448,120	5,977	3,794	69,486	2,127	81,495	52,810	7,880	1,462,901
1996	266,442	513,239	24,813	446,420	5,903	3,670	68,210	2,341	80,629	53,305	7,879	1,472,851
1997	268,942	528,014	25,136	432,316	5,981	3,601	68,893	2,205	80,583	55,274	7,721	1,478,666
1998	269,491	540,393	25,559	425,576	5,879	3,659	68,687	2,187	80,234	56,309	7,632	1,485,606
1999	275,300	555,606	25,647	416,530	5,732	3,625	68,911	2,357	80,363	58,754	7,707	1,500,532
2000	273,276	560,981	25,517	403,879	5,570	3,735	67,154	2,242	79,845	59,029	7,879	1,489,107
2001	276,714	581,444	25,602	418,510	5,609	3,775	67,003	2,277	79,879	59,974	8,402	1,529,189
2002	277,411	595,537	25,748	415,697	5,569	3,685	66,863	2,275	80,158	60,682	8,562	1,542,187
2003	277,208	595,044	25,616	395,535	5,492	3,686	66,293	2,242	78,030	61,595	9,714	1,520,455
2004	278,517	608,009	25,812	381,437	6,236	3,488	64,447	2,145	76,127	61,400	7,688	1,515,306
2005	275,093	609,160	25,619	360,885	5,375	3,354	62,721	2,100	74,078	59,502	8,031	1,485,918
2006	283,435	637,174	26,324	361,632	5,362	3,587	63,442	2,181	74,871	64,383	8,408	1,530,799
2007	281,965	645,335	26,002	362,633	5,296	3,578	62,822	2,036	73,437	64,853	9,127	1,537,084
2008	278,164	648,985	25,974	342,536	5,176	3,645	61,820	2,214	72,718	63,774	7,749	1,512,755
2009	282,405	667,918	26,572	337,107	5,119	3,515	62,830	2,140	72,498	66,333	9,111	1,535,548
2010	282,971	678,990	26,848	340,650	5,063	3,476	61,336	2,135	71,949	66,609	9,132	1,549,159
2011	276,426	671,628	25,522	328,243	4,954	3,457	59,942	2,127	70,229	65,989	7,832	1,516,349
2012	271,430	667,704	24,908	324,014	4,680	3,471	57,442	2,082	69,112	64,456	7,509	1,496,808
2013	276,356	680,531	25,470	320,026	4,835	3,470	58,258	2,457	67,708	63,831	6,711	1,509,653
2014	276,982	688,441	25,487	319,737	4,776	3,535	58,331	2,048	67,427	64,407	7,349	1,518,520
2015	267,995	678,672	24,788	289,506	4,580	3,414	57,173	2,028	66,640	62,379	6,851	1,464,026

Source: Compiled from "Survey of the Implementation of Noise Regulation Law," Ministry of the Environment

6.39 Changes in numbers of specified facilities under Vibration Regulation Law

（Unit: Facility）

	Metalworking machinery	Air compressor	Crusher for soil and stones, etc.	Loom	Concrete block machinery	Wood processing machinery	Printing press	Mixing Mill	Injection molding machinery for plastic	Molding machinery	Total
FY1987	275,863	91,934	15,799	339,341	11,624	4,072	36,887	3,805	40,618	5,142	825,085
1988	272,331	95,488	16,594	350,277	4,926	3,439	34,412	3,673	42,558	5,140	828,838
1989	279,502	97,133	16,330	350,926	5,079	3,446	35,068	3,721	43,656	5,221	840,082
1990	283,170	100,987	16,744	345,887	5,233	3,448	35,602	3,842	45,030	5,368	845,311
1991	285,552	104,694	17,252	345,162	5,209	3,580	35,999	3,939	46,234	5,592	853,213
1992	283,545	107,837	17,780	344,617	4,886	3,784	36,253	3,922	46,583	5,442	854,649
1993	285,844	110,796	18,062	342,775	2,537	3,804	35,983	3,917	47,035	5,511	856,264
1994	292,432	117,936	18,280	330,722	2,545	4,153	37,340	4,019	48,518	5,806	861,751
1995	287,691	128,592	18,316	318,499	2,533	4,039	37,268	3,909	48,299	5,488	854,634
1996	289,073	123,816	18,541	320,379	2,484	5,225	36,956	4,028	49,106	6,038	855,646
1997	289,695	129,562	18,940	318,131	2,477	4,136	37,286	3,892	50,893	6,041	861,053
1998	290,328	134,908	18,997	313,169	2,212	4,318	37,235	3,877	51,534	6,231	862,809
1999	294,777	142,042	19,554	307,210	2,248	4,389	37,695	3,779	54,501	6,338	872,533
2000	292,952	147,726	19,443	288,374	2,185	4,278	38,176	3,845	55,355	6,202	858,536
2001	295,097	154,696	21,516	296,072	2,926	4,345	38,212	3,912	55,935	7,015	879,726
2002	290,420	158,521	21,442	291,453	2,964	4,285	38,093	3,737	56,362	6,461	873,738
2003	290,783	164,838	19,064	291,204	3,004	4,587	37,750	3,854	57,116	6,108	878,308
2004	282,865	166,325	19,173	269,315	2,884	4,636	37,475	3,735	57,609	5,806	849,823
2005	275,787	169,757	19,286	265,111	2,887	4,621	37,948	3,709	56,212	5,847	841,165
2006	282,472	178,316	19,703	272,698	2,146	4,588	38,596	3,722	59,173	5,883	867,297
2007	285,122	186,778	20,221	263,444	2,171	4,765	38,405	3,796	61,535	6,020	872,257
2008	279,500	188,095	20,185	257,911	2,126	4,527	38,127	3,806	60,168	5,646	860,091
2009	276,659	189,723	20,130	247,633	2,056	4,801	37,627	3,727	60,519	5,729	848,609
2010	277,826	193,192	20,214	248,851	2,086	4,643	37,515	3,882	60,514	5,945	854,668
2011	276,569	198,076	20,807	250,422	2,104	4,624	37,146	3,814	60,993	6,626	861,181
2012	271,774	199,598	20,199	248,689	2,358	4,771	36,576	3,966	60,500	6,389	854,820
2013	271,318	205,663	20,436	245,155	2,332	4,469	36,509	3,607	60,253	6,290	856,032
2014	269,181	205,628	19,739	244,969	2,283	4,347	36,937	3,906	60,248	6,378	853,616
2015	261,426	201,168	19,700	233,585	2,411	4,276	36,325	3,741	58,614	5,887	827,133

Source: Compiled from "Survey of the Implementation of Vibration Regulation Law," Ministry of the Environment

6.40 Changes in number of specified facilities under Noise Regulation Law by prefecture

（Unit: Facility）

	FY2006	2007	2008	2009	2010	2011	2012	2013	2014	2015
Hokkaido	24,431	24,180	24,450	24,029	23,716	23,538	22,390	22,274	21,595	22,149
Aomori	3,046	3,031	3,071	3,154	3,124	3,144	3,179	3,265	3,310	3,165
Iwate	5,923	5,971	5,796	5,247	5,706	5,206	5,173	5,306	5,347	5,330
Miyagi	11,504	12,319	12,130	12,296	12,182	12,346	12,426	12,729	13,189	12,738
Akita	3,890	3,939	3,940	3,786	3,716	3,721	3,771	2,987	3,732	3,804
Yamagata	8,578	8,624	6,154	6,195	8,674	7,179	8,653	8,650	8,705	7,713
Fukushima	9,706	9,133	10,245	10,379	7,245	9,162	9,124	10,777	11,167	11,300
Ibaraki	25,859	25,050	25,054	25,152	24,786	23,078	21,291	22,793	22,796	23,107
Tochigi	14,651	15,291	15,373	15,290	15,126	13,381	13,451	12,725	12,780	12,214
Gunma	34,556	35,527	36,306	34,828	35,415	35,477	34,143	36,367	36,872	36,895
Saitama	58,264	58,968	58,937	58,813	58,318	58,468	58,742	60,239	65,505	66,785
Chiba	51,299	52,068	54,242	50,775	55,514	55,353	55,108	53,966	56,370	52,793
Tokyo	143,389	137,442	134,030	139,134	139,348	140,596	136,963	134,783	137,616	136,733
Kanagawa	59,416	59,887	59,742	60,389	59,743	59,833	60,751	57,562	58,180	60,606
Niigata	31,643	32,113	31,498	31,425	31,644	31,731	32,075	32,296	32,057	32,031
Toyama	16,477	16,892	17,356	17,837	17,679	17,757	18,713	18,772	18,773	19,068
Ishikawa	37,804	38,024	38,131	38,161	38,268	37,850	38,211	38,313	37,718	36,547
Fukui	36,090	36,088	36,138	35,780	35,808	35,778	35,888	35,858	35,877	35,899
Yamanashi	8,558	8,597	8,319	7,901	8,716	9,200	9,560	9,581	9,751	9,867
Nagano	16,525	16,927	14,068	17,849	18,214	18,056	18,033	18,197	18,206	17,193
Gifu	40,866	41,681	42,270	42,625	42,988	43,283	43,865	44,389	44,853	45,219
Shizuoka	99,190	100,083	95,014	94,759	95,697	96,215	97,001	95,161	93,696	99,677
Aichi	213,372	211,269	205,325	200,970	206,436	198,832	187,452	194,566	192,561	185,688
Mie	13,249	16,385	14,060	9,421	14,255	14,563	14,552	14,734	14,881	14,913
Shiga	36,844	38,136	32,706	61,617	59,292	28,676	26,874	29,015	28,975	29,016
Kyoto	39,883	39,261	38,138	38,300	38,202	38,584	37,990	37,994	37,863	37,626
Osaka	169,308	169,249	165,748	160,926	158,783	165,159	165,620	165,729	165,312	132,012
Hyogo	77,510	78,650	79,767	80,716	81,226	78,607	78,730	79,206	79,602	77,907
Nara	11,067	11,302	11,418	11,609	11,767	11,766	11,883	12,029	12,010	11,954
Wakayama	6,443	6,161	6,278	6,319	6,345	6,385	6,356	6,426	5,807	5,844
Tottori	2,246	2,258	2,239	2,219	1,864	897	1,876	1,903	2,004	2,026
Shimane	2,223	2,238	2,254	2,725	2,726	2,725	2,565	1,799	1,366	1,335
Okayama	29,213	29,594	29,857	30,005	30,071	30,312	30,275	27,485	26,547	23,180
Hiroshima	37,003	38,038	37,248	37,615	37,734	37,866	37,641	38,355	38,653	38,889
Yamaguchi	9,389	9,348	9,319	9,307	9,269	9,552	9,642	9,767	9,873	9,892
Tokushima	5,229	5,291	5,247	5,390	5,444	5,533	5,251	5,833	5,848	6,032
Kagawa	10,516	10,594	10,827	11,304	11,684	12,071	11,922	12,280	12,502	10,579
Ehime	18,129	18,355	18,569	18,897	19,397	19,542	19,510	18,710	18,940	13,792
Kochi	2,195	2,207	2,332	2,351	2,349	2,133	2,338	2,316	2,174	2,161
Fukuoka	42,586	43,012	43,716	43,673	43,858	44,503	43,535	45,651	45,682	45,164
Saga	10,562	11,029	11,302	11,073	11,385	11,919	11,495	11,832	11,879	10,156
Nagasaki	5,490	5,120	5,450	5,343	5,392	4,850	4,862	4,848	4,820	4,902
Kumamoto	17,555	17,808	18,029	18,517	18,183	19,150	15,024	18,830	19,445	19,165
Oita	12,177	12,500	12,704	13,372	13,423	13,601	13,807	13,996	14,133	13,860
Miyazaki	5,774	5,812	6,220	6,053	6,222	6,301	6,375	6,510	6,518	6,677
Kagoshima	8,100	8,510	8,617	8,651	8,724	8,892	9,077	9,016	9,146	8,178
Okinawa	3,071	3,122	3,121	3,371	3,501	3,578	3,645	3,833	3,884	2,245
Nationwide	1,530,799	1,537,084	1,512,755	1,535,548	1,549,159	1,516,349	1,496,808	1,509,653	1,518,520	1,464,026

Source: "Survey on the Implementation of Noise Regulation Law," Ministry of the Environment

6.41 Changes in number of specified facilities under Vibration Regulation Law by prefecture

(Unit: Facility)

	FY2006	2007	2008	2009	2010	2011	2012	2013	2014	2015
Hokkaido	7,704	7,766	7,851	7,675	7,456	7,388	6,907	6,965	6,687	6,827
Aomori	1,225	1,278	1,301	1,336	1,337	1,330	1,341	1,356	1,386	1,237
Iwate	2,327	2,324	2,187	1,910	2,097	2,039	1,897	2,025	1,567	1,847
Miyagi	4,915	5,597	5,466	5,763	5,719	5,778	5,808	5,939	6,087	5,060
Akita	1,325	1,358	1,381	1,346	1,273	1,279	1,292	1,236	1,295	1,328
Yamagata	5,636	5,608	5,583	5,678	5,695	4,925	5,735	5,758	5,828	5,214
Fukushima	4,640	5,675	5,726	5,532	4,117	4,788	4,852	5,347	5,509	5,550
Ibaraki	8,688	9,073	9,109	9,241	9,317	9,192	9,423	8,820	9,192	9,432
Tochigi	10,192	10,482	10,455	10,221	10,307	8,570	8,592	8,239	6,070	5,812
Gunma	25,969	26,571	25,359	24,542	24,695	25,154	24,892	25,679	25,751	25,943
Saitama	35,808	36,376	35,534	34,808	34,829	34,752	34,787	36,548	39,539	40,751
Chiba	15,151	15,366	15,983	15,471	16,645	16,434	15,870	16,074	16,504	14,543
Tokyo	64,702	62,782	61,947	61,147	59,964	60,734	59,723	58,696	54,064	52,634
Kanagawa	35,211	35,196	34,201	34,598	33,375	33,578	34,471	30,852	33,006	32,399
Niigata	21,719	21,971	21,622	21,575	21,699	21,810	21,951	22,003	22,163	20,782
Toyama	8,312	8,450	8,460	8,593	8,611	8,608	9,055	8,809	9,029	9,446
Ishikawa	28,115	28,256	28,329	28,321	28,388	28,435	28,445	28,496	28,141	27,178
Fukui	21,752	21,874	21,899	21,776	21,830	21,819	21,823	21,861	21,880	21,880
Yamanashi	6,667	6,747	6,606	6,102	6,763	7,043	7,275	7,278	7,459	7,287
Nagano	10,132	10,374	8,610	10,230	10,344	10,266	10,357	10,468	10,438	10,526
Gifu	30,792	33,733	34,304	34,568	34,815	35,113	35,585	36,046	36,559	36,859
Shizuoka	67,731	68,562	64,756	61,698	65,611	65,669	66,130	60,302	65,032	64,519
Aichi	154,634	143,492	149,429	146,711	151,881	150,453	143,122	152,497	146,691	141,730
Mie	8,557	10,305	8,878	6,400	8,874	8,990	9,079	9,103	9,025	9,161
Shiga	20,643	24,619	19,528	16,022	13,563	17,729	16,354	17,062	17,668	17,068
Kyoto	21,921	21,510	20,985	21,191	21,396	21,553	21,047	20,210	21,058	20,968
Osaka	102,933	104,449	100,275	98,668	95,698	97,556	97,812	97,368	97,078	91,559
Hyogo	41,062	41,664	42,276	42,533	42,657	42,726	42,937	42,727	43,127	43,018
Nara	7,397	7,609	7,703	7,819	7,966	7,983	8,114	8,240	8,090	7,969
Wakayama	2,274	2,528	2,823	2,929	3,035	3,221	3,290	3,319	3,152	3,232
Tottori	1,087	1,096	1,080	1,077	894	525	904	905	910	916
Shimane	1,036	1,049	1,157	1,395	1,395	1,443	2,347	758	565	539
Okayama	18,985	19,286	19,464	19,421	19,461	19,518	19,474	17,503	16,113	15,063
Hiroshima	14,607	14,870	14,466	14,963	15,068	14,806	14,788	14,732	14,767	14,822
Yamaguchi	4,379	4,453	4,439	4,392	4,310	4,322	4,345	4,361	4,546	4,479
Tokushima	2,404	2,388	2,489	2,501	2,286	2,342	2,127	2,559	2,561	2,375
Kagawa	3,897	3,920	3,931	4,018	3,980	4,021	4,381	4,665	4,659	3,660
Ehime	7,782	8,069	7,836	7,944	8,001	7,915	8,067	7,981	8,086	3,464
Kochi	1,057	1,076	1,080	1,147	1,164	1,194	1,195	1,182	1,175	1,210
Fukuoka	14,788	14,970	15,191	15,448	15,595	15,604	15,420	16,075	15,853	15,361
Saga	2,605	3,085	3,227	3,096	3,502	4,450	4,273	4,455	4,473	4,153
Nagasaki	1,637	1,334	1,597	1,448	1,569	1,614	1,613	1,643	1,659	1,668
Kumamoto	4,345	4,339	4,477	6,045	5,970	6,601	5,724	6,760	7,070	6,354
Oita	4,675	4,791	4,884	5,054	5,104	5,206	5,262	5,382	5,162	5,191
Miyazaki	1,608	1,595	1,785	1,754	1,822	1,951	1,963	1,970	1,987	2,024
Kagoshima	3,379	3,453	3,510	3,541	3,596	3,691	3,861	3,782	3,816	3,496
Okinawa	892	888	912	961	994	1,063	1,110	1,131	1,139	599
Nationwide	867,297	872,257	860,091	848,609	854,668	861,181	854,820	855,167	853,616	827,133

Source: "Survey of the Implementation of Vibration Regulation Law," Ministry of the Environment

6.42 Trends in number of complaints on noise, vibration and odor

（Unit: Case）

	Noise	Vibration	Odor
FY1977	21,038	3,823	16,676
1978	22,886	4,033	16,742
1979	22,686	3,914	15,499
1980	22,571	3,766	13,439
1981	22,103	3,737	13,541
1982	22,322	3,067	13,395
1983	21,781	3,103	12,741
1984	22,894	3,131	13,529
1985	20,171	3,118	13,070
1986	19,937	3,058	12,705
1987	22,120	3,109	12,488
1988	20,746	3,279	11,932
1989	19,479	2,921	11,717
1990	19,018	2,795	11,666
1991	16,800	2,207	10,616
1992	15,539	2,193	10,753
1993	15,094	2,083	9,972
1994	15,986	2,547	11,946
1995	14,359	2,742	11,276
1996	15,059	2,662	11,942
1997	14,011	2,257	14,554
1998	12,685	2,124	20,092
1999	12,452	2,084	18,732
2000	14,066	2,264	21,205
2001	14,547	2,480	23,776
2002	15,461	2,614	23,519
2003	15,928	2,608	24,587
2004	16,215	3,289	19,657
2005	16,470	3,599	19,114
2006	17,192	3,615	18,805
2007	16,434	3,384	17,533
2008	15,558	2,941	16,245
2009	15,101	2,540	15,937
2010	15,849	2,882	15,194
2011	15,944	3,222	14,569
2012	16,518	3,254	14,411
2013	16,717	3,351	13,792
2014	17,110	3,180	13,136
2015	16,490	3,011	12,959

Note:
Surveyed by the Environmental Dispute Coordination from FY 1970 to FY 1974.

Source: Compiled from "Survey on the Implementation of Noise Regulation Law," "Survey on the Implementation of Vibration Regulation Law," "Survey on the Implementation of Offensive Odor Control Law," Ministry of the Environment

6.43 Achievement of environmental standards for noises caused by automobiles, airplanes and Shinkansen

Automobile

	Number of local governments conducted evaluations	Number of residences evaluated	Number of residence where standard values were achieved and rate							
			Below standard values in both daytime and night		Below standard values only at night		Below standard values only in daytime		Exceed standard values in both daytime and night	
		(Thousand)	(Thousand)	(%)	(Thousand)	(%)	(Thousand)	(%)	(Thousand)	(%)
FY2001	78	1,487	1,154	77.6	122	8.2	13	0.9	198	13.3
2002	102	1,934	1,549	80.1	127	6.6	24	1.2	234	12.1
2003	141	2,395	1,933	80.7	177	7.4	22	0.9	263	11.0
2004	165	2,663	2,167	81.4	194	7.3	22	0.8	280	10.5
2005	165	2,914	2,458	84.4	181	6.2	22	0.7	253	8.7
2006	172	3,292	2,812	85.4	196	6.0	26	0.8	258	7.8
2007	176	3,861	3,398	88.0	211	5.5	28	0.7	225	5.8
2008	178	4,632	4,158	89.8	218	4.7	28	0.6	229	4.9
2009	179	5,072	4,595	90.6	221	4.4	25	0.5	231	4.6
2010	179	5,759	5,260	91.3	222	3.9	28	0.5	248	4.3
2011	179	6,116	5,612	91.8	224	3.7	29	0.5	252	4.1
2012	818	6,645	6,151	92.6	228	3.4	28	0.4	238	3.6
2013	828	7,209	6,695	92.9	231	3.2	30	0.4	253	3.5
2014	835	7,794	7,265	93.2	241	3.1	32	0.4	256	3.3
2015	837	8,185	7,663	93.6	242	3.0	33	0.4	248	3.0
2016	841	8,618	8,092	93.9	244	2.8	35	0.4	248	2.9

Notes:

・Reporting by prefectures and so forth was started in FY 2000 as continuous monitoring of automobile noises under Noise Regulation Law started.

・Residences and the like within 50m from the both sides of the roads facing major highways were evaluated.

・Needs taking yearly differences in residences subject to evaluation into consideration.

・Total figures may not fitted due to rounding.

Source: Compiled from "Survey on the road traffic noise," Ministry of the Environment

Airplanes

	Number of measurement points	Number of measurement points that achieved target
FY2001	592	441
2002	563	402
2003	554	403
2004	581	417
2005	590	433
2006	584	418
2007	577	426
2008	576	438
2009	568	423
2010	582	454
2011	563	435
2012	568	441
2013	549	420
2014	542	412
2015	574	458

Notes:

・The results of the measurements in each year by the relevant local governments among areas where such prefectural governments specified patterns, were tabulated.

・Needs to take into consideration that measurement points each year may not be the same.

・Because of the adoption of new evaluation targets based on the partial revision of Environmental Standards regarding airplane noise, the results in 2013 and onward cannot be simply compared with those in 2012 or before.

Source: Compiled from materials by Ministry of the Environment

Shinkansen

	Number of measurement points	Number of measurement points that achieved target
FY2001	292	114
2002	296	123
2003	314	118
2004	331	129
2005	374	144
2006	373	153
2007	378	160
2008	346	149
2009	412	195
2010	424	219
2011	504	299
2012	482	290
2013	496	289
2014	479	248
2015	608	325

Notes:

・The results of the measurements in each year by relevant local governments among areas where such prefectural governments specified patterns, were tabulated.

・Needs to take into consideration that measurement points each year may not be the same.

・Tabulation was made from the results measured at a location of approximately 25 meters from the track-center on the side of a measuring point (a standard measuring point).

・In "countermeasures against 75dB"target sections, the noise level may exceed Environmental standards after the implementation of countermeasures against 75dB since the countermeasures only aims at lowering the noise level below 75dB for the time being.

※ As part of countermeasures to conform with Environmental Standards, concerned governmental agencies and enterprises have been promoting the "countermeasures against 75dB(phon)" since FY1985 for reduction of noise focusing on the "target sections", which means densely populated residential areas along the Shinkansen railroads where the noise level exceeds 75 phon.

Source: Compiled from materials by Ministry of the Environment

7.01 Dioxins emission inventory (1)

Source		Amount of emission (g-TEQ/Year)							Remarks column						
		2009	2010	2011	2012	2013	2014	2015	2009	2010	2011	2012	2013	2014	2015
1 Emissions to air															
Municipal waste incinerators		36	33	32	31	30	27	24	⑪	⑭	⑰	⑳	㉓	㉖	㉙
Industrial waste incinerators		33	28	27	28	19	19	19	⑪	⑭	⑰	⑳	㉓	㉖	㉙
Small-scale waste incinerators	3)	33-34	32-33	24.5	22.6	23	22.2	21.5	⑪	⑭	⑰	⑳	㉓	㉖	㉙
Crematoria		1.2-2.8	1.2–3.0	1.3-3.1	1.3-3.1	1.3-3.2	1.3-3.2	1.3-3.2	⑫	⑮	⑱	㉑	㉔	㉗	㉙
Electric steel-making furnaces		20.1	30.1	21.6	21.2	23.3	22.1	25.2	⑬	⑯	⑲	㉒	㉕	㉘	㉚
Sintering process for steel industry		9.1	10.9	11.9	14.1	12	10.8	7.1	⑬	⑯	⑲	㉒	㉕	㉘	㉛
Facilities for recovering zinc		2.2	2.3	2.5	0.93	3.2	2.9	3.2	⑬	⑯	⑲	㉒	㉕	㉘	㉛
Secondary aluminum smelting and refining facilities	6)	8.53	7.3	7.59	6.76	6.97	6.75	6.66	⑬	⑯	⑲	㉒	㉕	㉘	㉛
Aluminum scrap melting process for aluminum rolling industry		2.2	1.1	1.1	1.1	1.4	1.4	1.4	⑬	⑯	←	←	㉕	←	㉛
Aluminum scrap melting process for automobile dismantling and metal scrapping industry	1a)	0.32	0.32	0.32	0.32	-	-	-	⑬	⑯	←	←	㉕	←	←
Aluminum scrap melting process for aluminum casting/die-casting industry	1a)	0.014	0.014	0.014	0.014	0.014	0.014	0.014	①	←	←	←	←	←	←
Aluminum cutting chips drying process for automobile and automobile parts manufacturing industry		0.006	0.0009	0.001	0.001	0.0004	0.0004	0.0004	⑬	⑯	←	←	㉕	←	←
Paper manufacturing (Kraft pulp recovery boilers)	1b)	0.056	0.073	0.073	0.073	0.067	0.067	0.067	⑬	⑯	←	←	㉕	←	←
PVC-monomer manufacturing facilities		0.31	0.51	0.51	0.51	0.18	0.18	0.18	⑬	⑯	←	←	㉕	←	←
Caprolactam manufacturing (using nitrosyl chloride) facilities	5)	-	–	–	–	-	-	-	-	–	←	←	←	←	-
Chlorobenzene manufacturing facilities		0.000012	0.000002	0.000002	0.000002	0.000002	0.000002	0.000002	⑬	⑯	←	←	㉕	←	←
Potassium-sulphate manufacturing facilities	5)	-	-	–	–	-	-	-	-	–	–	–	-	-	-
Short alumina-fiber manufacturing facilities		0.093	0.050	0.050	0.050	0.008	0.008	0.008	⑬	⑯	←	←	㉕	←	←
Cement-manufacturing facilities	4)	0.86 (1.79)	0.54 (1.20)	0.54 (1.20)	0.54 (1.20)	0.30 (0.70)	0.30 (0.70)	0.30 (0.70)	⑬	⑯	←	←	㉕	←	←
Refractory material manufacturing facilities	5)	-	-	–	–	-	-	-	-	–	–	–	-	-	-
Fire brick manufacturing facilities	5)	-	-	–	–	-	-	-	-	–	–	–	-	-	-
Roof tile manufacturing facilities	5)	0.0029	0.0032	–	–	-	-	-	⑬	⑯	–	–	-	-	-
Sheet glass manufacturing facilities	5)	-	–	–	–	-	-	-	-	–	–	–	-	-	-
Glass fiber manufacturing facilities	5)	-	–	–	–	-	-	-	-	–	–	–	-	-	-
Electric glass manufacturing facilities	5)	-	–	–	–	-	-	-	-	–	–	–	-	-	-
Optical glass manufacturing facilities	5)	-	–	–	–	-	-	-	-	–	–	–	-	-	-
Frit (roof tile glazing materials) manufacturing facilities	5)	-	–	–	–	-	-	-	-	–	–	–	-	-	-
Frit (enamel-glazing materials) manufacturing facilities	5)	-	–	–	–	-	-	-	-	–	–	–	-	-	-
Glass container manufacturing facilities	5)	-	–	–	–	-	-	-	-	–	–	–	-	-	-
Glass tableware manufacturing facilities	5)	-	–	–	–	-	-	-	-	–	–	–	-	-	-
Tile manufacturing facilities	5)	-	–	–	–	-	-	-	-	–	–	–	-	-	-
Sanitary earthenware manufacturing facilities	5)	-	–	–	–	-	-	-	-	–	–	–	-	-	-
Kiln furniture manufacturing facilities	5)	-	–	–	–	-	-	-	-	–	–	–	-	-	-
Ceramic tableware manufacturing facilities	5)	-	–	–	–	-	-	-	-	–	–	–	-	-	-
Insulator manufacturing facilities	5)	-	–	–	–	-	-	-	-	–	–	–	-	-	-
Lime manufacturing facilities	1a)	0.8	1.1	1.1	1.1	0.95	0.95	0.95	⑬	⑯	←	←	㉕	←	←
Cast and forged steel manufacturing facilities		0.17	0.217	0.22	0.22	0.57	0.57	0.57	⑬	⑯	←	←	㉕	←	←
Primary copper smelting facilities		0.43	0.322	0.32	0.32	0.18	0.18	0.18	⑬	⑯	←	←	㉕	←	←
Primary lead smelting facilities		0.013	0.094	0.094	0.094	0.027	0.027	0.027	⑬	⑯	←	←	㉕	←	←
Primary zinc smelting facilities		0.918	1.367	1.37	1.37	0.07	0.07	0.07	⑬	⑯	←	←	㉕	←	←
Copper recovery facilities		0	0	0	0	0	0	0	⑬	⑯	←	←	㉕	←	←
Lead recovery facilities		0.0068	0.011	0.011	0.011	0.014	0.014	0.014	⑬	⑯	←	←	㉕	←	←
Precious metals recovery facilities	5)	-		–	–	-	-	-	-	–	–	–	-	-	-
Wrought copper and copper alloy products manufacturing facilities	1a)	1.24	1.42	1.42	1.42	1.30	1.30	1.30	⑬	⑯	←	←	㉕	←	←
Copper wire and cable manufacturing facilities	1b)	0.48	0.53	0.53	0.53	0.49	0.49	0.49	⑬	⑯	←	←	㉕	←	←
Aluminum casting/die-casting facilities	5)	0.011	0.014	–	–	-	-	-	⑬	⑯	–	–	-	-	-
Automobile manufacturing (aluminum casting/die-casting) facilities		0.50	0.30	0.30	0.30	0.3	0.3	0.3	⑬	⑯	←	←	㉕	←	←
Automobile parts manufacturing (aluminum casting/die-casting) facilities		0.282	0.388	0.388	0.388	0.099	0.099	0.099	⑬	⑯	←	←	㉕	←	←
Thermal power plants		1.18	1.26	1.26	1.26	1.62	1.62	1.62	⑬	⑯	←	←	㉕	←	←
Cigarette smoke		0.06	0.06	0.05	0.05	0.05	0.05	0.05	⑪	⑭	⑰	←	㉓	←	←
Exhaust gas from automobiles	1b)	1.0	1.0	1.0	1.0	0.92	0.92	0.92	⑪	⑭	⑰	←	㉓	←	←

7.01 Dioxins emission inventory (2)

Source		Amount of emission (g-TEQ/Year)							Remarks column						
		2009	2010	2011	2012	2013	2014	2015	2009	2010	2011	2012	2013	2014	2015
2 Emissions to water															
Municipal waste incinerators		0.0010	0.0020	0.0007	0.0010	0.00062	0.00075	0.0032	⑪	⑭	⑰	⑳	㉓	㉖	㉙
Industrial waste incinerators		0.60	0.71	0.35	0.64	0.48	0.29	0.32	⑪	⑭	⑰	⑳	㉓	㉖	㉙
Bleaching facilities for pulp making		0.19	0.24	0.24	0.24	0.09	0.09	0.09	⑬	⑯	←	←	㉕	←	←
PVC monomer manufacturing facilities		0.055	0.051	0.051	0.051	0.12	0.12	0.12	⑬	⑯	←	←	㉕	←	←
Aluminum alloy manufacturing (rolling, etc.)		0.008	0.011	0.011	0.011	0.008	0.008	0.008	⑬	⑯	←	←	㉕	←	←
Aluminum alloy manufacturing (automobiles and automobile parts manufacturing)		0.000009	0.000013	0.000013	0.000013	0.00000002	0.00000002	0.00000002	⑬	⑯	←	←	㉕	←	←
Caprolactam manufacturing (using nitrosylchloride) facilities		0.012	0.010	0.010	0.010	0.0047	0.0047	0.0047	⑬	⑯	←	←	㉕	←	←
Chlorobenzene manufacturing facilities		0.0000002	0.000001	0.000001	0.000001	0.000002	0.000002	0.000002	⑬	⑯	←	←	㉕	←	←
Potassium sulphate manufacturing facilities		0		–	–	-	-	-	⑬	⑯	–	–	-	-	←
Acetylene manufacturing (dry process) facilities		0.0010	0.0012	–	–	-	-	-	⑬	⑯	–	–	-	-	-
Short alumina fiber manufacturing facilities		0.0016	0.0010	–	–	-	-	-	⑬	⑯	–	–	-	-	-
Dioxazine violet manufacturing facilities		0	0	–	–	-	-	-	⑬	⑯	–	–	-	-	-
Facilities for recovering Zinc		0.00083	0.00040	0.00003	0.00006	0.00002	0.00011	0.00001	⑬	⑯	⑲	㉒	㉕	㉘	㉛
Facilities for manufacturing yellow pigment intermediates	5)	-	-	–	–	-	-	-	-	–	–	–	-	-	-
4-Chlorophthalic acid monosodium salt manufacturing facilities		0.0000001	0.0000002	–	–	-	-	-	⑬	⑯	–	–	-	-	-
2, 3-dichloro-1, 4-naphthoquinone manufacturing facilities		0.000009	0.000137	–	–	-	-	-	⑬	⑯	–	–	-	-	-
Terminal sewage treatment facilities		0.131	0.23	0.50	0.11	0.22	0.19	0.2	⑪	⑭	⑰	⑳	㉓	㉖	㉙
Joint wastewater treatment facilities		0.056	0.264	0.26	0.26	0.057	0.057	0.057	⑪	⑭	⑰	←	㉓	←	←
Final disposal sites		0.006	0.006	0.007	0.007	0.006	0.006	0.004	⑪	⑭	⑰	⑳	㉓	㉖	㉙
Facilities for processing exhaust gas from carrier type catalyst manufacturing facilities		0.000083	0.000000055	–	–	-	-	-	⑬	⑯	–	–	-	-	-
Facilities for processing PCB	7)	0.00000046	0.000005	0.000063	0.000006	0.000001	0.000003	0.000003	⑪	⑭	⑰	⑳	㉓	㉖	㉙
Facilities for destroying CFC	7)	0.00014	0.000023	0.000012	0.00001	0.000045	0.000079	0.012	⑪	⑭	⑰	⑳	㉓	㉖	㉙
Total		155-157	158–160	141–143	136–138	128-130	121-123	118-120							
Of which, emission to water		1.1	1.5	1.4	1.3	1.0	0.8	0.8							

Notes:

1: Unit of emission: g-TEQ/year. Emissions from 2001 to 2007 are expressed by WHO-TEF(1998) as Toxicity Equivalency Factor. Emissions after 2008 are expressed by WHO-TEF(2006) as long as possible.

1a: Emissions from Aluminum scrap melting process for automobile dismantling and metal scrapping industry, Aluminum scrap melting process for aluminum casting/die-casting industry, Roof tile manufacturing facilities, Lime manufacturing facilities, and Wrought copper and copper alloy products manufacturing facilities are expressed by WHO-TEF (1998) as Toxicity Equivalency Factor.

1b: Parts of Emission data from Paper manufacturing (Kraft pulp recovery boilers), Copper wire and cable manufacturing facilities, Exhaust gas from automobiles are expressed by WHO-TEF(1998) as Toxicity Equivalency Factor.

2: Arrows in the Remarks column indicate that the same amount was considered to be emitted as in the year which arrow points.

3: Small-scale waste incinerator refer to an incinerator with capacity of less than 200kg/h and implemented at plants.

4: Parenthesized values refer to the number of facilities having permissions for installing industrial waste disposal facilities and the numbers are excluded from total.

5: Sources not listed in Stockholm Convention on Persistent Organic Pollutants Annexes C, of which emission amounts are so small as to not affect total of emissions in any way, are excluded from the calculation.

6: Up until 2003, generation source of aluminum related products was called as "Aluminum alloy manufacturing facilities" as a collective term, from 2004, it was called as "Secondary aluminum smelting and refining facilities" as "the Government Plan to Reduce Dioxin Levels Resulting from Business Activities in Japan" described. No alternation on data has been conducted so far.

7: Data collection on an amount of gas emission from operators nationwide began and they were compiled when operators were registered as a so-called specified facility which "the Law Concerning Special Measures against Dioxins" stipulates.

8: Numbers in the Remark column correspond with the followings.

①: estimated by METI in Sep., 2004
②: estimated by Moe in Dec., 2007
③: estimated by MHLW in Oct., 2007
④: estimated by METI in Oct., 2007
⑤: estimated by Moe in Nov., 2008
⑥: estimated by MHLW in Nov., 2008
⑦: estimated by METI in Nov., 2008
⑧: estimated by Moe in Nov., 2009
⑨: estimated by MHLW in Sep., 2009
⑩: estimated by METI in Oct., 2009
⑪: estimated by Moe in Dec., 2010
⑫: estimated by MHLW in Oct., 2010
⑬: estimated by METI in Nov., 2010
⑭: estimated by Moe in Feb., 2012
⑮: estimated by MHLW in Nov., 2011
⑯: estimated by METI in Feb., 2012
⑰: estimated by Moe in Jan., 2013
⑱: estimated by MHLW in Nov., 2012
⑲: estimated by METI in Dec., 2012
⑳: estimated by Moe in Feb., 2014
㉑: estimated by MHLW in Nov., 2013
㉒: estimated by METI in Feb., 2014
㉓: estimated by Moe in Mar., 2015
㉔: estimated by MHLW in Nov., 2014
㉕: estimated by METI in Feb., 2015
㉖: estimated by Moe in Mar., 2016
㉗: estimated by MHLW in Nov., 2015
㉘: estimated by METI in Mar., 2016
㉙: estimated by Moe in Mar., 2017
㉚: estimated by MHLW in Jan., 2017
㉛: estimated by METI in Mar., 2017

Source: "Dioxins Emission Inventory," Ministry of the Environment

7.02 Result of environmental survey on dioxins

(FY2015)

Unit : Air pg-TEQ/m^3
Water quality pg-TEQ/L
Sediments pg-TEQ/g
Soil quality pg-TEQ/g

Environmental media	Type of survey or classification of areas (Water area)	Number of Sampling points	Number of samples	Sampling points that exceed environmental standards	Results of Survey			Environmental Standard value
					Average	Minimum value	Maximum value	
Air	All	660	1,978	0	0.021	0.0042	0.49	0.6
		(706)	(2,036)	(-)	(0.021)	(0.0029)	(0.49)	
	Ambient Environment	497	1,492	0	0.019	0.0049	0.190	
		(524)	(1,529)	(-)	(0.019)	(0.0029)	(0.190)	
	Vicinities of sources	137	398	0	0.028	0.0042	0.49	
		(156)	(419)	(-)	(0.027)	(0.0042)	(0.49)	
	Roadsides	26	88	0	0.019	0.0053	0.050	
		(26)	(88)	(-)	(0.019)	(0.0053)	(0.050)	
Public Waters ~~area~~ Quality	All	1,491	1,955	23	0.18	0.0110	4.9	1
	River	1,147	1,578	21	0.21	0.0110	4.9	
	Lakes and marshes	93	104	2	0.15	0.0140	1.7	
	Sea areas	251	273	0	0.069	0.0150	0.59	
Public Waters ~~area~~ Sediment	All	1,232	1,305	3	7.1	0.0590	1,100	150
	River	942	1,013	3	6.6	0.0590	1,100	
	Lakes and marshes	86	86	0	8.2	0.2100	33	
	Sea areas	204	206	0	9.1	0.0660	100	
Groundwater Source		515	518	0	0.004	0.0036	0.88	1
Soil	Total	852	852	0	2.6	0	100	1,000
	Ambient Environment Survey	599	599	0	1.8	0	100	
	Survey on the vicinities of pollution sources	253	253	0	4.4	0	100	

Notes:
・Average, Minimum value, and Maximum value are the annual average, minimum, and maximum values taken at each sampling points.
・WHO-TEF(2006) is used to calculate amount of toxic equivalent.
・As for Air, data includes survey results of fixed points designated by Ministry of the Environment, as well as the survey results independently carried out by municipality designated by Air Pollution Control Law ordinance. The lower parenthesized data refers to data from all of the sampling points.
・The number of over-the-standards sampling points for sediments of pubic water areas that of sampling points where the environmental standards were exceeded once a year or more.
・As for underground water, besides the survey reported here, investigation on the surrounding area of pollution well (5 samples from 5 sampling points) and continuous monitoring and researches (15 samples from 18 sampling points) were implemented.
・As for soil, data from 8 samples of 8 sampling points where a simplified measuring method is used are not included when calculating averages and concentration range. Also, a continuous monitoring and research (4 samples from 4 sampling points in 4 areas) was carried out for soil.

Source: "Dioxins Emission Inventory," Ministry of the Environment

7.03 Chronological changes in daily intake of dioxins per person in Japan 1)

Convert per 1kg body weight（Unit：pg-TEQ / kg bw / day）

	Air and Soil		FOOD 2)															Tolerable daily intake (TDI)
	Air 3)	Soil 4)	Rice and Processed rice	Grains except rice, Nuts(Fruits), Potatoes	Sugar and Confectionary	Oils and fats	Beans and Processed beans	Fruits, Juice	Green and Yellow Vegetables	Other vegetables, Mushrooms, Sea Weeds	Beverages including alcoholic beverage	Seafood	Meat and Eggs	Milk and Dairy Products	Seasoning	Drinking Water	Total	
FY 2000	0.042	0.0092	0.0002	0.0038	0.011	0.0032	0.0004	0.0002	0.0212	0.0288	0.00	1.107	0.194	0.0794	0.0048	0.00	Approx. 1.50	4 5)
	0.051		1.453															
FY 2001	0.042	0.0064	0.0004	0.0268	0.004	0.001	0.0028	0.0004	0.0222	0.0028	0.0076	1.335	0.154	0.0698	0.0020	0.00	Approx. 1.68	
	0.048		1.629															
FY 2002	0.028	0.0068	0.0002	0.001	0.006	0.001	0.0002	0.00	0.0030	0.001	0.00	1.290	0.150	0.0346	0.0014	0.00	Approx. 1.52	
	0.035		1.489															
FY 2003	0.020	0.0052	0.00	0.001	0.002	0.002	0.00	0.00	0.0018	0.001	0.0002	1.147	0.141	0.0322	0.0018	0.00	Approx. 1.36	
	0.025		1.330															
FY 2004	0.017	0.0044	0.0004	0.0026	0.002	0.001	0.0004	0.00	0.0028	0.0026	0.001	1.245	0.101	0.0468	0.0020	0.00	Approx. 1.43	
	0.021		1.409															
FY 2005	0.015	0.0040	0.0004	0.0022	0.002	0.001	0.0008	0.00	0.0028	0.001	0.000	1.090	0.0686	0.0328	0.0014	0.00	Approx. 1.22	
	0.019		1.203															
FY 2006	0.015	0.0038	0.0006	0.0054	0.002	0.001	0.0002	0.00	0.0012	0.001	0.000	0.9400	0.0704	0.0212	0.0012	0.00	Approx. 1.06	
	0.019		1.045															
FY 2007	0.012	0.0054	0.0002	0.001	0.002	0.0004	0.0004	0.00	0.0006	0.001	0.00	1.033	0.0422	0.0226	0.0012	0.00	Approx. 1.12	
	0.017		1.106															
FY 2008	0.011	0.0056	0.00	0.0008	0.001	0.0004	0.0002	0.00	0.0008	0.001	0.00	0.8634	0.0396	0.0076	0.0008	0.00	Approx. 0.93	
	0.017		0.9152															
FY 2009	0.009	0.0042	0.00	0.0010	0.001	0.0006	0.0002	0.00	0.0004	0.001	0.00	0.7840	0.0398	0.013	0.0012	0.00	Approx. 0.86	
	0.014		0.8428															
FY 2010	0.009	0.0042	0.00	0.0004	0.001	0.0004	0.0000	0.00	0.0006	0.0004	0.00	0.7626	0.0416	0.0028	0.0036	0.00	Approx. 0.83	
	0.014		0.8134															
FY 2011	0.008	0.0040	0.00	0.0006	0.001	0.0004	0.0002	0.00	0.0002	0.0004	0.00	0.6308	0.0416	0.0008	0.0016	0.00	Approx. 0.69	
	0.012		0.6774															

	total (pg-TEQ/kg)	Air and Soil (%		Food (%)						tolerable daily intake (TDI) (pg-TEQ/kg)
		Air 3)	Soil 4)	Seafood	Meat and Eggs	Seasoning	Milk and Dairy Products	Sugar and Confectionary	others	
FY2012	0.7	1.14	0.46	89.52	7.70	0.23	0.40	0.11	0.30	4 5)
FY2013	0.59	1.12	0.75	89.39	7.75	0.27	0.10	0.10	0.51	
FY2014	0.7	0.89	0.46	91.05	6.17	0.20	0.03	0.06	1.14	
FY2015	0.65	0.87	0.56	87.01	10.74	0.31	0.09	0.06	0.37	

Notes:

1: WHO-TEF(1998) is used from FY 2000 to FY 2007 and WHO-TEF(2006) is used after FY2008 to calculate toxic equivalent (TEQ).
2: Effective digit is based on the amount of daily intake of dioxins byfood category and total amount of daily intake of diet.
3: The values calculated by dividing the sum of the multiples of each of the averages and the corresponding numbers of locations by the grand total number of locations is used as for the average values for Ambient Environment and roadside., each average values are added with the value.
4: The average values of ambient environment are used.
5: TDI are set under Act on Special Measures against Dioxins(Act No. 106 of July 16, 1999),
Reference: http://law.e-gov.go.jp/htmldata/H11/H11HO105.html and http://www1.mhlw.go.jp/houdou/1106/h0621-3_13.html

Source: "Survey on dioxins," Ministry of the Environment
"Survey of daily intake of dioxin from diet (Health Labor Sciences Research)," Ministry of Health, Labor and Welfare

7.04 Chronological changes in daily intake of dioxins originated from total diet samples

Survey on chronological changes in daily intake of dioxins from stored samples [1)]

（Unit： pg-TEQ / kg bw / day）

	Dioxins	Co-planar PCB	PCDDs＋PCDFs
FY 1977	8.18	4.43	3.75
1982	5.32	2.96	2.36
1988	5.58	3.14	2.44
1992	2.07	1.23	0.84
1995	2.30	1.15	1.15
1998	2.72	1.80	0.92

Survey on daily intake [2)]

（Unit： pg-TEQ / kg bw / day）

	Dioxins	Co-planar PCB	PCDDs＋PCDFs
FY 1998	2.00	1.16	0.83
1999	2.25	1.36	0.89
2000	1.45	0.88	0.57
2001	1.63	1.09	0.54
2002	1.49	0.97	0.52
2003	1.33	0.89	0.44
2004	1.41	0.96	0.45
2005	1.20	0.82	0.38
2006	1.04	0.73	0.31
2007	1.11	0.78	0.33
2008	0.92	0.66	0.26
2009	0.84	0.61	0.24
2010	0.81	0.57	0.24
2011	0.68	0.47	0.20
2012	0.69	0.48	0.21
2013	0.58	0.39	0.18
2014	0.69	0.48	0.21
2015	0.64	0.46	0,18

Notes:

1: Estimation of a chronological change in the amount of dioxins intake from an average diet by analyzing Dioxins with total diet samples collected and stored at five time-points in Kansai area between FY 1977 and FY 1995 (six time-points if FY 1998 is included).

2: Estimation of the amount of dioxins intake from an average diet by analyzing Dioxins with total diet samples collected from all over the country.

Source: "Survey of daily intake of dioxins from diet (Health Labor Sciences Research) in 2015," Ministry of Health, Labor and Welfare

7.05 Notifications of specified facilities based on the Law concerning Special Measures against Dioxins (1)

(Unit: Facilities)

	Facilities subject to Gas Emission Standards								Facilities subject to Effluent Emission Standards							
	FY 2008 end	FY 2009 end	FY2010 end	FY 2011 end	FY 2012 end	FY 2013 end	FY 2014 end	FY 2015 end	FY 2008 end	FY 2009 end	FY2010 end	FY 2011 end	FY 2012 end	FY 2013 end	FY 2014 end	FY 2015 end
Hokkaido	295	292	285	288	278	271	264	254	86	83	84	88	90	94	92	91
Aomori	147	140	139	139	138	137	139	134	55	72	77	73	73	73	73	72
Iwate	144	142	139	130	126	126	127	116	8	8	8	9	9	9	19	16
Miyagi	145	140	136	148	150	123	122	126	17	17	17	16	16	16	16	16
Akita	96	94	91	88	84	84	86	87	11	11	11	11	10	10	10	10
Yamagata	129	128	123	117	120	116	113	111	47	47	48	43	43	42	42	42
Fukushima	167	162	157	156	156	154	150	149	72	69	61	61	60	60	65	64
Ibaraki	500	486	458	437	421	411	405	388	112	114	112	106	98	91	88	85
Tochigi	292	277	274	248	244	228	220	218	19	19	21	16	18	20	18	18
Gunma	211	169	166	135	131	128	121	121	29	21	21	15	16	15	16	15
Saitama	420	407	393	375	357	351	339	311	255	251	253	240	242	239	237	232
Chiba	426	404	395	384	373	360	344	336	156	147	142	136	137	136	132	132
Tokyo	360	343	331	325	326	324	317	284	262	252	256	259	263	258	250	228
Kanagawa	153	153	151	144	140	127	122	118	92	96	103	105	105	87	89	87
Niigata	268	257	248	246	240	230	225	220	72	73	73	73	73	71	71	70
Toyama	135	129	127	124	117	113	111	107	50	49	51	43	39	40	36	38
Ishikawa	99	90	89	88	86	84	82	81	13	11	11	11	11	11	11	11
Fukui	144	140	137	126	120	111	103	101	43	41	41	40	37	31	30	30
Yamanashi	101	99	95	91	88	88	88	84	14	13	13	10	10	10	11	10
Nagano	219	207	199	184	181	166	159	159	114	111	109	102	102	91	95	98
Gifu	269	261	257	245	240	227	216	207	49	46	46	42	43	40	40	40
Shizuoka	428	415	394	377	366	345	336	323	308	306	304	297	298	290	285	265
Aichi	461	438	423	413	392	387	386	371	114	109	104	99	100	93	91	95
Mie	283	274	267	254	253	256	245	239	64	64	56	55	54	48	44	42
Shiga	172	154	149	140	129	121	119	118	24	19	19	20	19	19	20	19
Kyoto	96	96	93	92	91	89	88	92	23	23	22	22	22	22	22	27
Osaka	187	184	175	166	160	150	132	131	156	158	153	120	120	115	103	84
Hyogo	335	293	290	285	272	264	256	238	117	87	86	87	86	81	82	52
Nara	198	196	195	194	195	190	187	182	35	34	38	34	34	33	35	35
Wakayama	107	100	94	91	89	85	85	82	23	20	20	19	19	19	18	16
Tottori	100	97	96	95	94	91	89	84	39	39	39	39	39	39	35	30
Shimane	102	91	90	82	79	80	75	73	30	32	31	29	28	32	30	30
Okayama	143	135	136	132	141	142	133	122	31	31	31	31	32	34	34	28
Hiroshima	188	181	178	165	159	150	149	143	35	33	33	29	27	27	27	16
Yamaguchi	202	190	185	176	162	157	146	149	75	74	69	69	67	67	68	18
Tokushima	177	173	172	166	162	149	148	139	49	47	47	41	41	39	39	31
Kagawa	139	137	132	128	125	121	115	112	37	37	36	38	37	35	35	26
Ehime	216	206	203	202	197	189	183	187	34	37	37	36	36	37	37	12
Kochi	129	127	127	124	121	114	111	108	9	9	9	9	7	6	6	6
Fukuoka	282	278	261	248	236	233	233	227	71	73	71	70	63	66	61	58
Saga	131	128	122	118	114	111	109	101	20	20	21	18	18	20	20	17
Nagasaki	133	123	124	118	116	116	108	104	26	26	26	26	24	23	22	20
Kumamoto	168	159	154	146	137	135	135	132	10	10	10	12	12	12	12	12
Oita	65	65	65	66	64	62	62	56	−	-	-	-	-	-	-	-
Miyazaki	80	78	76	70	70	69	66	63	4	5	5	6	6	6	6	6
Kagoshima	168	167	168	166	166	161	160	159	2	1	1	1	1	1	1	1
Okinawa	114	110	103	102	102	105	103	98	34	37	36	36	37	37	36	32

7.05 Notifications of specified facilities based on the Law concerning Special Measures against Dioxins (2)

(Unit: Facilities)

	Facilities subject to Gas Emission Standards								Facilities subject to Effluent Emission Standards							
	FY 2008 end	FY 2009 end	FY2010 end	FY 2011 end	FY 2012 end	FY 2013 end	FY 2014 end	FY 2015 end	FY 2008 end	FY 2009 end	FY2010 end	FY 2011 end	FY 2012 end	FY 2013 end	FY 2014 end	FY 2015 end
Sapporo	30	30	30	27	27	26	24	22	22	22	22	20	20	20	25	25
Sendai	33	31	30	33	31	27	27	27	15	13	13	32	32	22	8	14
Saitama	41	35	30	30	29	29	28	24	12	12	11	12	12	12	15	12
Chiba	55	54	52	53	48	46	45	44	36	36	36	36	35	35	34	35
Yokohama	93	91	86	85	82	82	80	79	66	68	68	67	61	61	61	59
Kawasaki	62	61	59	59	56	54	55	49	74	74	70	71	71	75	76	70
Sagamihara	36	24	22	22	20	20	19	19	50	40	35	35	33	33	29	29
Niigata	71	72	71	68	59	57	55	54	25	25	24	23	21	19	18	18
Shizuoka	89	89	77	74	69	67	64	63	24	24	22	22	22	22	22	22
Hamamatsu	67	65	64	61	60	60	54	52	20	20	20	20	20	20	15	15
Nagoya	75	74	75	72	66	63	62	58	41	42	45	45	45	45	44	44
Kyoto	76	71	73	72	71	68	65	61	31	31	33	33	31	27	26	24
Osaka	72	67	65	65	65	60	54	54	52	51	52	59	57	54	50	46
Sakai	53	55	56	53	52	50	46	44	17	17	18	16	16	16	16	13
Kobe	42	40	37	36	34	35	35	35	29	22	21	20	21	23	23	26
Okayama	63	61	58	56	52	51	49	49	17	17	16	16	15	15	10	9
Hiroshima	66	61	61	60	53	49	45	45	52	51	55	53	53	45	40	39
Kitakyushu	66	66	68	65	65	59	55	53	74	108	113	111	110	107	105	85
Fukuoka	23	23	23	23	23	23	22	20	25	25	25	25	25	25	25	24
Kumamoto	20	22	22	21	21	22	22	19	6	6	6	6	6	7	7	6
Hakodate	9	9	9	9	9	10	10	10	1	1	1	1	1	1	1	1
Asahikawa	12	12	12	12	12	10	10	10	4	4	4	4	4	4	4	4
Aomori	35	35	36	32	31	27	27	24	6	6	6	5	5	4	4	3
Morioka	28	28	29	26	23	23	22	21	3	3	3	3	3	3	2	3
Akita	19	18	18	17	17	17	17	17	15	15	15	14	14	14	14	14
Koriyama	21	18	18	17	17	18	17	17	3	3	3	3	5	3	3	3
Iwaki	37	35	36	34	32	32	32	32	29	27	34	34	36	36	39	39
Utsunomiya	27	25	25	24	24	25	24	22	22	19	19	19	19	20	20	16
Maebashi	-	39	33	32	29	30	30	30	-	12	10	12	12	12	12	12
Takasaki	-	-	-	27	27	25	24	22	-	-	-	6	6	6	6	6
Kawagoe	16	15	14	12	12	11	11	11	12	12	9	8	8	7	7	8
Koshigaya	-	-	-	-	-	-	-	9	-	-	-	-	-	-	-	5
Funabashi	21	21	18	18	16	16	18	18	2	2	2	2	1	1	2	2
Kashiwa	22	18	18	17	16	16	15	15	-	-	-	-	-	-	-	-
Hachioji	-	-	-	-	-	-	-	23	-	-	-	-	-	-	-	14
Yokosuka	17	17	17	17	19	19	19	17	21	21	20	20	21	21	21	21
Toyama	49	47	47	46	46	45	42	41	15	15	15	15	15	14	14	14
Kanazawa	31	34	33	30	30	28	26	26	5	5	9	11	9	9	9	10
Nagano	26	24	22	20	20	18	19	19	18	16	14	13	13	11	12	12
Gifu	29	29	27	26	26	26	26	27	6	6	6	6	6	6	3	9
Toyohashi	23	21	22	22	20	21	21	20	8	7	8	8	8	7	7	7
Okazaki	35	32	28	26	27	26	25	24	10	11	7	5	5	5	5	4
Toyoda	53	52	51	48	48	49	48	45	51	50	50	51	51	51	51	50
Otsu	-	16	15	15	14	13	13	12	-	5	5	7	7	7	5	6
Toyonaka	-	-	-	6	8	8	6	6	-	-	-	13	10	10	6	6
Takatsuki	14	14	14	14	14	14	13	12	19	19	19	18	18	18	18	18
Hirakata	-	-	-	-	-	-	14	14	-	-	-	-	-	-	12	11
Higashi Osaka	17	17	17	16	16	16	18	18	14	14	14	12	12	12	14	14
Himeji	74	79	78	74	74	75	75	73	45	55	56	53	57	57	55	32
Amagasaki	-	20	19	18	18	19	18	18	-	25	26	25	25	24	24	18
Nishinomiya	8	8	11	11	8	8	8	8	4	4	5	8	7	7	7	7
Nara	29	29	29	27	26	26	26	26	4	4	4	4	4	4	4	4
Wakayama	57	53	51	46	45	46	43	43	11	10	10	10	10	10	10	4
Kurashiki	70	70	70	68	66	66	63	61	45	45	45	43	43	43	41	14
Fukuyama	69	66	64	61	58	56	55	53	17	15	18	18	16	16	16	14
Shimonoseki	31	30	28	28	28	28	29	28	2	2	2	2	2	2	2	-
Takamatsu	27	26	26	25	25	24	24	24	7	7	7	7	7	7	7	7
Matsuyama	36	34	39	37	35	34	34	32	4	4	4	4	4	4	4	1
Kochi	28	27	27	27	27	25	23	22	7	7	7	7	7	6	5	5
Kurume	23	23	23	23	21	21	22	23	3	3	3	3	3	3	3	3
Nagasaki	21	19	18	17	15	15	16	16	9	9	9	7	7	7	7	7
Oita	43	44	44	42	41	39	36	32	23	23	23	23	22	22	22	2
Miyazaki	17	17	16	15	15	15	14	15	4	4	4	5	5	5	5	5
Kagoshima	38	36	35	35	34	34	34	34	7	7	7	7	7	7	7	7
Naha	-	-	-	-	-	1	1	1	-	-	-	-	-	-	-	-
Nationwide	11,769	11,364	11,058	10,686	10,380	10,054	9,786	9,487	4,090	4,083	4,070	3,980	3,943	3,834	3,769	3,440

Source: "Enforcement status of the Law concerning Special Measures against Dioxins," Ministry of the Environment

7.06 Specified facilities subject to Gas Emission Standards, based on the Law Concerning Special Measures against Dioxins(by type of notification)

(Units)

		March, 31 2008 Number of units installed	March, 31 2009 Number of units installed	March, 31 2010 Number of units installed	March, 31 2011 Number of units installed	March, 31 2012 Number of units installed	March, 31 2013 Number of units installed	March, 31 2014 Number of units installed	March, 31 2015 Number of units installed	March, 31 2016 Number of units installed
Sintering furnace for producing sintered ores		32	32	32	32	31	31	31	31	31
Electric furnace for steel-making		110	111	112	114	112	112	110	105	105
Zinc recovery facility	Roasting furnace	7	10	12	13	12	13	12	11	11
	Sintering furnace	2	2	5	5	5	5	6	6	6
	Blast furnace	2	2	2	3	2	2	2	2	2
	Melting furnace	3	3	2	2	2	3	3	4	4
	Drying furnace	1	2	6	9	8	8	9	10	10
	Subtotal	15	19	27	32	29	31	32	33	33
Aluminum alloy facility	Roasting furnace	22	22	27	28	30	30	29	27	27
	Melting furnace	759	756	748	731	722	689	671	677	658
	Drying furnace	62	62	60	58	54	53	52	50	52
	Subtotal	843	840	835	817	806	772	752	754	737
Waste incinerator	More than 4t/h	1,121	1,125	1,103	1,106	1,112	1,122	1,115	1,117	1,099
	More than 2t/h～less than 4t/h	1,489	1,481	1,460	1,450	1,431	1,416	1,395	1,381	1,351
	Less than 2t/h	8,510	8,161	7,793	7,499	7,165	6,896	6,619	6,365	6,131
	More than 200kg/h ～less than 2t/h	2,955	2,884	2,772	2,673	2,570	2,476	2,357	2,267	2,188
	More than 100kg～Less than 200kg	3,802	3,602	3,433	3,307	3,178	3,077	2,976	2,888	2,785
	More than 50kg/h ～less than 100kg/h	1,227	1,175	1,109	1,063	987	931	895	839	810
	Less than 50kg/h（more than 0.5m2）	526	500	479	456	430	412	391	371	348
	Subtotal	11,120	10,767	10,356	10,055	9,708	9,434	9,129	8,863	8,581
Total		12,120	11,769	11,362	11,050	10,686	10,380	10,054	9,786	9,487

Note: Tabulated the numbers of units installed in the notified facilities based on the Article 12 & 13 of the Act.

Source: "Enforcement status of the Law concerning Special Measures against Dioxins," Ministry of the Environment

7.07 Notifications from facilities subject to Effluent Emission Standards, based on the Act on Special Measures against Dioxins (by contents of notification)

(Units)

		Number of facilities at the end of Fiscal Year								
		FY 2008	FY 2009	FY 2010	FY 2011	FY 2012	FY 2013	FY 2014	FY 2015	FY 2016
Bleaching using chlorine or chlorine compound to produce sulfate cellulose (craft pulp) or sulfite cellulose (sulfite pulp.)		91	89	75	76	77	76	72	72	70
Acetylene cleaning to produce acetylene from calcium carbide.		57	56	55	55	55	57	57	57	56
Cleaning waste gas to produce sulfuric acid potassium.		0	0	0	0	0	0	0	0	0
Cleaning waste gas to produce alumina fiber.		21	22	22	22	23	27	26	26	29
Cleaning waste gas f to process gas generated from a baking furnace to produce a catalyst with a carrier.		6	7	7	7	7	7	9	10	11
Cleaning Dichloro- ethylene to produce vinyl chloride monomer.		32	32	32	32	32	32	32	32	28
Sulfuric-acid concentration, cyclohexane separation, waste gas cleaning to produce caprolactm.		5	5	3	5	5	5	5	5	5
Water cleaning facility and waste gas cleaning facility to produce chlorobenzene or dichlorobenzene.		4	2	2	2	2	2	2	5	5
Filtering treatment facility, drying facility and waste gas cleaning facility to produce 4-Chlorophthalic acid.		6	6	3	3	3	3	3	3	3
Filtering treatment facility, and waste gas cleaning facility to produce 2, 3-dichloro-1, 4-naphthoquinone.		3	3	3	3	3	3	3	3	3
Nitration derivative separation facility, nitration-reduction derivative separation facility, nitration derivative cleaning facility, nitration-reduction derivative cleaning facility, dioxazine purple cleaning facility, Hot-air drying facility used to produce dioxazine purple.		7	7	7	7	7	7	7	7	7
Roasting furnace, melting furnace, or drying furnace used to produce aluminum or the alloy thereof that are related to waste gas cleaning facility and wet-type dust collection facility.		82	80	79	80	73	72	72	64	64
Refinement facility, waste gas cleaning facility and wet-type dust collection facility that are used in collection of zinc.		16	19	38	44	45	43	43	44	45
Filtering treatment facility, refinement facility and waste gas cleaning facility used in metallic collection from a catalyst with a carrier.		254	253	252	251	249	255	246	247	233
Waste gas cleaning facility, wet-type dust collection facility and ash collection facility related to waste incinerator that discharge polluted water or waste fluid.	Waste gas cleaning facility, wet-type dust collection facility	2,215	2,199	2,137	2,110	2,003	1,976	1,899	1,825	1,782
	Ash collection facility	849	834	877	875	893	879	862	873	849
	Subtotal	3,064	3,033	3,014	2,985	2,896	2,855	2,761	2,698	2,631
Decomposition of waste PCB or process of PCB, and cleaning and decomposition of PCB polluted materials and processed PCB.		130	128	127	126	128	130	129	128	133
Plasma reaction, waste gas cleaning and wet-type dust collection for destruction of CFC.		54	59	61	62	61	61	61	63	57
Terminal processing of sewage		252	252	256	258	258	253	249	249	244
Treatment of water discharged from a factory or business establishment with a facility subject to the Effluent Emission Standards		55	54	54	58	56	55	57	58	56
Total		4,139	4,107	4,090	4,076	3,980	3,943	3,834	3,769	3,680

Note: Notifications based on the Act on Special Measures against Dioxins and permissions and the like based on the Act on Special Measures concerning Conservation of the Environment of the Seto Inland Sea are tabulated together.

Source: "Enforcement status of the Act on Special Measures against Dioxins," Ministry of the Environment

7.08 Number of notifications for new chemical compounds based on Act on the Evaluation of Chemical Substances and Regulation of their Manufacture, etc.

(Unit: Case)

	New: Regular	Fiscal Year	New: Small-quantity		
				Produced	Imported
1975	82	1975	773	469	304
1980	253	1980	1,833	937	896
1985	376	1985	3,893	2,177	1,716
1990	272	1990	6,848	4,799	2,049
1995	296	1995	8,050	5,951	2,099
2000	373	2000	10,032	7,222	2,810
2001	322	2001	10,669	7,559	3,110
2002	292	2002	11,763	8,153	3,610
2003	362	2003	13,087	8,973	4,114
2004	121	2004			

(Unit: Case)

	New: Regular	Low production amount	Intermediates			Intermediates: small quantity			New: Small quantity		
				Produced	Imported		Produced	Imported		Produced	Imported
FY 2004	238	191	425	281	144	-	-	-	14,823	9,889	4,934
FY 2005	225	194	202	102	100	-	-	-	15,923	10,650	5,273
FY 2006	284	219	170	98	72	-	-	-	17,687	11,718	5,969
FY 2007	384	242	226	113	113	-	-	-	19,641	12,694	6,947
FY 2008	378	298	172	98	74	-	-	-	21,356	13,551	7,805
FY 2009	306	271	213	114	99	-	-	-	22,860	14,111	8,749
FY 2010	321	339	266	140	126	-	-	-	25,848	-	-
FY 2011	453	311	265	120	145	-	-	-	28,547	-	-
FY 2012	454	248	259	116	143	-	-	-	31,672	-	-
FY 2013	315	234	204	80	124	-	-	-	34,056	-	-
FY 2014	367	233	231	103	128	124	42	82	36,053	-	-
FY 2015	347	220	205	87	118	203	85	118	35,357	-	-
FY 2016	321	276	124	49	75	180	76	104	35,841	-	-

Note:
For 2004 (calendar year), from Jan. to Mar.

Source: For 1975 to 2000, materials by Ministry of Economy, Trade and Industry, and for 2001 to 2015, material by Ministry of the Environment

7.09 Results of the Initial Environmental Survey

Water quality

No.	Substance registry number	Name of substances	Detection frequency Number of samples where the chemical is detected /Number of samples	Detection frequency Number of study areas where substances are detected /Number of study areas	Detection range (ng/L)	Detection limit (ng/L)
1	3	*N*-Ethylaniline	0/15	0/15	nd	13
2	5	Silver and its compounds (as Silver)	19/21	19/21	nd～120	0.6
3	6	2,4-Diaminoanisole	0/16	0/16	nd	160
4	7	2,4-Dichlorophenol	2/21	2/21	nd～8.3	1.9
5	8	*N,N*-Dimethylacetamide	11/20	11/20	nd～73,000	14
6	9	2,3-Dimethylaniline	0/15	0/15	nd	12
7	10	2,3,5,6-Tetrachloro-*p*-benzoquinone	0/14	0/14	nd	180
8	11	1,2,3-Trimethylbenzene	2/16	2/16	nd～11	4.8
9	13	Bis (4-aminocyclohexyl) methane (synonym: Diaminodicyclohexylmethane)	0/16	0/16	nd	14
10	14	1,3-Bis[(2,3-epoxypropyl)oxy]benzene	0/19	0/19	nd	9.7
11	15	Organictin compounds				
12	15-1	Monobutyltin compounds	7/23	7/23	nd～220	4.4
13	15-2	Dibutyltin compounds	7/22	7/22	nd～160	1.7
14	15-3	Dimethyltin compounds	6/23	6/23	nd～110	7.0

Air

No.	Substance registry number	Name of substances	Number of detected substance/Number of samples	Number of study areas where substances are detected /Number of study areas	Detection range (ng/m³)	Detection limit (ng/m³)
1	1	2-Hydroxyethyl acrylate	0/54	0/18	nd	58
2	2	1-Allyloxy-2,3-epoxypropane	6/48	3/16	nd～14	8.6
3	4	2,3-Epoxy-1-propanol	0/48	0/16	nd	1,000
4	12	*N*-Nitrosodimethylamine	36/36	12/12	0.17～380	0.017
5	15	Organictin compounds				
6	15-1	Monobutyltin compounds	9/42	5/14	nd～16	4.7
7	15-2	Dibutyltin compounds	0/42	0/14	nd	4.9
8	15-3	Dimethyltin compounds	1/42	1/14	nd～18	3.7

Note:
・Detection range refers to maximum and minimum values of detected sample substance.
・Indicate that surveyed areas include the vicinity of points with high emissions that were notified based on PRTR.

Source: "Environmental Survey and Monitoring of Chemicals in 2016," Ministry of the Environment

7.10 Results of the Detailed Environmental Survey

Water quality

No.	Substance registry number	Name of substances	Detection frequeny Number of samples where the chemical is detected /Number of samples	Detection frequency Number of study areas where substances are detected /Number of study areas	Detection range (ng/L)	Detection limit (ng/L)
1	2	2-(2-Ethoxyethoxy)ethanol	20/20	20/20	110～480	54
2	3	Chloroethane	9/20	9/20	nd～19	1.7
3	4	3-Chloropropene (synonym: Allyl chloride)	0/23	0/23	nd	1.1
4	5	Diethanolamine（Fresh water area）	11/12	11/12	nd～720	14
5	5	Diethanolamine（Sea water area）	6/11	6/11	nd～1,100	220
6	6	2,6-Di-tert-butyl-4-methylphenol (synonym: 2,6-Di-tert-butyl-4-cresol)	18/21	18/21	nd～43	6.2
7	7	*N,N*-Dimethyldodecylamine *N*-oxide	20/23	20/23	nd～25	0.5
8	8	1,5,5-Trimethyl-1-cyclohexen-3-one (synonym: Isophorone)	10/21	10/21	nd～53	7.8
9	9	Hydrazine	20/21	20/21	nd～14	0.41
10	10	1-Butanol	0/19	0/19	nd	160
11	11	Methyl ethyl ketone	20/20	20/20	79～1,300	8.1

Bottom sediment

No.	Substance registry number	Name of substances	Number of detected substance/Number of samples	Number of study areas where substances are detected /Number of study areas	Detection range (ng/g-dry)	Detection limit (ng/g-dry)
1	6	2,6-Di-tert-butyl-4-methylphenol (synonym: 2,6-Di-tert-butyl-4-cresol)	52/63	20/21	nd～32	0.37
2	7	*N,N*-Dimethyldodecylamine *N*-oxide	68/72	24/24	nd～3.5	0.014

Living organism

No.	Substance registry number	Name of substances	Number of detected substance/Number of samples	Number of study areas where substances are detected /Number of study areas	Detection range (ng/g-wet)	Detection limit (ng/g-wet)
3	6	2,6-Di-tert-butyl-4-methylphenol	32/36	11/12	nd～120	0.29

Air

No.	Substance registry number	Name of substances	Number of detected substance/Number of samples	Number of study areas where substances are detected /Number of study areas	Detection range (ng/g-wet)	Detection limit (ng/g-wet)
1	1	Isobutyraldehyde	0/57	0/19	nd	2,200

Note:

・Detection range refers to maximum and minimum values of detected sample substance.

・Indicate that surveyed areas include the vicinity of points with high emissions that were notified based on PRTR.

Source: "Environmental Survey and Monitoring of Chemicals in 2016," Ministry of the Environment

7.11 Results of Environmental Monitoring (1)

Registry Numbers	Target substance	Water quality (pg/L)		Bottom sediment (pg/g-dry)		Organism (pg/g-wet)						Air (pg/m³)	
						Seashells		Fish		Birds		1st (Warm season)	
		Range (Detection Frequency)	Average	Range (Detection Frequency)	Average	Range (Detection Frequency)	Average	Range (Detection Frequency)	Average	Range (Detection Frequency)	Average	Range (Detection Frequency)	Average
1	PCBs	34～4,200 (48/48)	200	nd～1,100,000 (61/62)	6,400	580～9,600 (3/3)	2,400	1,300～180,000 (19/19)	11,000	5,000 (1/1)	5,000	17～950 (35/35)	98
2	HCB	4.2～140 (48/48)	15	4.4～17,000 (62/62)	100	tr(14)～120 (3/3)	35	43～1,700 (19/19)	170	760 (1/1)	760	74～170 (35/35)	120
3	Aldrin												
4	Dieldrin												
5	Endrin												
6	DDT and its derivatives												
6-1	*p,p'*-DDT											0.18～13 (35/35)	1.5
6-2	*p,p'*-DDE											0.31～34 (35/35)	2.4
6-3	*p,p'*-DDD											nd～tr(0.31) (17/35)	nd
6-4	*o,p'*-DDT											0.14～6.8 (35/35)	0.99
6-5	*o,p'*-DDE											nd～1.1 (34/35)	0.25
6-6	*o,p'*-DDD											nd～0.37 (25/35)	tr(0.09)
7	Chlordane derivatives												
7-1	cis-Chlordane												
7-2	trans-Chlordane												
7-3	Oxychlordane												
7-4	*cis*-Nonachlor												
7-5	*trans*-Nonachlor												
8	Heptachlor derivatives												
8-1	Heptachlor					nd～tr(1.7) (1/3)	nd	nd～9.2 (9/19)	nd	nd (0/1)	nd	0.43～49 (35/35)	8.7
8-2	*cis-Heptachlor epoxide*					7.2～91 (3/3)	21	3.2～190 (19/19)	33	20 (1/1)	20	tr(0.4)～4.7 (35/35)	1.4
8-3	*trans*-Heptachlor epoxide					nd (0/3)	nd	nd～10 (5/19)	nd	nd (0/1)	nd	nd (0/35)	nd
9	Toxaphenes												
9-1	Parlar-26					nd～tr(17) (2/3)	tr(10)	nd～400 (13/19)	26	tr(10) (1/1)	tr(10)		
9-2	Parlar-50					nd～tr(16) (2/3)	tr(11)	nd～640 (13/19)	tr(25)	nd (0/1)	nd		
9-3	Parlar-62					nd (0/3)	nd	nd～320 (2/19)	nd	nd (0/1)	nd		
10	Mirex												
11	HCHs												
11-1	α-HCH	8.7～610 (48/48)	48	1.1～9,600 (62/62)	97	3.5～25 (3/3)	11	tr(1.3)～180 (19/19)	19	13 (1/1)	13	8.8～300 (35/35)	33
11-2	β-HCH	21～1,100 (48/48)	130	2.5～5,900 (62/62)	160	13～69 (3/3)	34	6.0～390 (19/19)	56	57 (1/1)	57	0.36～34 (35/35)	3.0
11-3	γ-HCH(synonym : Lindane)	2.6～110 (48/48)	17	tr(0.3)～2.800 (62/62)	29	tr(3.6)～14 (3/3)	7.3	nd～42 (14/19)	6.1	nd (0/1)	nd	1.4～51 (35/35)	8.3
11-4	δ-HCH	0.8～310 (48/48)	7.2	tr(0.4)～2.900 (62/62)	27	nd～tr(1.5) (1/3)	nd	nd～17 (12/19)	tr(1.7)	nd (0/1)	nd	nd～22 (32/35)	0.55
12	Chlordecone												

7.11 Results of Environmental Monitoring (2)

Registry Numbers	Target substance	Water quality (pg/L)		Bottom sediment (pg/g-dry)		Organism (pg/g-wet)						Air (pg/m³)	
						Seashells		Fish		Birds		1st (Warm season)	
		Range (Detection Frequency)	Average	Range (Detection Frequency)	Average	Range (Detection Frequency)	Average	Range (Detection Frequency)	Average	Range (Detection Frequency)	Average	Range (Detection Frequency)	Average
13	Hexabromobiphenyl derivatives			nd～15 (9/62)	nd	nd (0/3)	nd	nd (0/19)	nd	nd (0/1)	nd	nd～1.1 (2/35)	nd
14	Polybrominated diphenyl ether derivatives (4-10 bromide)												
14-1	Tetrabromodiphenyl ether derivatives	tr(1.2)～ 40 (48/48)	4.3	nd～1,400 (44/62)	30	32～89 (3/3)	48	tr(14)～580 (19/19)	90	36 (1/1)	36	nd～2.7 (30/35)	tr(0.3)
14-2	Pentabromodiphenyl ether derivatives	nd～31 (34/48)	tr(3.0)	nd～1,300 (44/62)	23	16～20 (3/3)	18	nd～140 (18/19)	22	22 (1/1)	22	nd～0.9 (6/35)	nd
14-3	Hexabromodiphenyl ether derivatives	nd～12 (5/48)	nd	nd～820 (42/62)	11	nd～41 (2/3)	tr(8.5)	nd～250 (18/19)	44	30 (1/1)	30	nd～2 (3/35)	nd
14-4	Heptabromodiphenyl ether derivatives	nd～28 (9/48)	nd	nd～1,800 (44/62)	16	nd～tr(11) (1/3)	nd	nd～44 (4/19)	nd	tr(11) (1/1)	tr(11)	nd～tr(0.6) (2/35)	nd
14-5	Octabromodiphenyl ether derivatives	nd～36 (31/48)	2.3	nd～1,400 (41/62)	58	nd (0/3)	nd	nd～60 (9/19)	tr(7)	tr(5) (1/1)	tr(5)	nd～3.8 (9/35)	nd
14-6	Nonabromodiphenyl ether derivatives	nd～330 (47/48)	36	nd～11,000 (55/62)	300	nd～tr(11) (1/3)	nd	nd～35 (6/19)	nd	tr(12) (1/1)	tr(12)	nd～12 (14/35)	nd
14-7	Decabromodiphenyl ether	140～13,000 (48/48)	720	40～490.000 (62/62)	6,600	nd～tr(70) (1/3)	nd	nd～380 (5/19)	nd	tr(90) (1/1)	tr(90)	nd～61 (30/35)	4.2
15	Perfluorooctane sulfonic acid (PFOS)	120～4,700 (48/48)	630	7～2,200 (62/62)	91	nd～210 (2/3)	8.1	nd～2,500 (18/19)	91	790 (1/1)	790	0.59～8.8 (35/35)	2.8
16	Perfluorooctane acid (PFOA)	310～17,000 (48/48)	1,400	8～270 (62/62)	48	nd～26 (2/3)	tr(6.5)	nd～99 (11/19)	tr(6.0)	31 (1/1)	31	tr(3.7)～260 (35/35)	19
17	Pentachlorobenzene	3.0～180 (48/48)	13	2.4～2,600 (62/62)	65	tr(7.4)～18 (3/3)	tr(11)	tr(4.5)～230 (18/19)	26	53 (1/1)	53	34～170 (35/35)	67
18	Endosulfans												
18-1	α-Endosulfan					nd～130 (1/3)	nd	nd～tr(49) (1/19)	nd	nd (0/1)	nd	1.6～140 (35/35)	10
18-2	β-Endosulfan					nd～tr(22) (1/3)	nd	nd～tr(11) (1/19)	nd	nd (0/1)	nd	nd～38 (33/35)	0.7
19	1,2,5,6,9,10-Hexabromocyclododecane derivatives												
19-1	α-1,2,5,6,9,10-Hexabromocyclododecane			nd～27,000 (47/62)	390	150～560 (3/3)	260	nd～3,000 (18/19)	160	80 (1/1)	80	nd～30 (26/35)	tr(0.7)
19-2	β-1,2,5,6,9,10-Hexabromocyclododecane			nd～7,600 (33/62)	130	nd～tr(30) (2/3)	tr(10)	nd～tr(20) (2/19)	nd	nd (0/1)	nd	nd～3.9 (7/35)	nd
19-3	γ-1,2,5,6,9,10-Hexabromocyclododecane			nd～60,000 (48/62)	330	tr(20)～200 (3/3)	70	nd～230 (10/19)	tr(20)	tr(10) (1/1)	tr(10)	nd～4.4 (11/35)	nd
19-4	δ-1,2,5,6,9,10-Hexabromocyclododecane			nd (0/62)	nd	nd (0/3)	nd	nd～tr(20) (1/19)	nd	nd (0/1)	nd	nd～1.9 (1/35)	nd
19-5	ε-1,2,5,6,9,10-Hexabromocyclododecane			nd (0/62)	nd	nd～tr(10) (1/3)	nd	nd～tr(10) (1/19)	nd	nd (0/1)	nd	nd (0/35)	nd
20	N,N-dimethylformamid					nd～580 (2/3)	70	nd～390 (13/19)	tr(50)	tr(20) (1/1)	tr(20)		
21	Hexachlorobuta-1,3-diene											70～2,100 (34/34)	1,100
22	Pentachlorophenol	nd～26,000 (25/48)	130										

Notes:

- "Average" menas a geometric mean. "nd (less than the lower limit of detection value)" was calculated as 1/2 of the lower limit of a detection value.
- Detection rage is based on the number of samples and detection frequency is based on the number of surveyed areas/sites, therefore can be shown as "nd ～"even if a target substance is detected in all areas/sites.
- Shaded areas refer to media out of scope of the survey.

7.11 Results of Environmental Monitoring (3)

Registry Number	Target substance	Water quality (pg/L)	Bottom Sediment (pg/g-dry)	Organism (pg/g-wet)	Air (pg/㎥)
1	PCBs	21 7.3	62 22	52 17	5.9 2.0
2	HCB	1.8 0.6	3 1	20 6.5	0.5 0.2
3	Aldrin				
4	Dieldrin				
5	Endrin				
6	DDTs				
6-1	p,p'-DDT				0.15 0.05
6-2	p,p'-DDE				0.12 0.04
6-3	p,p'-DDD				0.33 0.11
6-4	o,p'-DDT				0.12 0.04
6-5	o,p'-DDE				0.18 0.06
6-6	o,p'-DDD				0.20 0.07
7	Chlordane derivatives （Reference）				
7-1	cis-Chlordane （Reference）				
7-2	trans-Chlordone （Reference）				
7-3	Oxychlordane （Reference）				
7-4	cis-Nonachlor （Reference）				
7-5	trans-Nonachlor （Reference）				
8	Heptachlors				
8-1	Heptachlor			3.0 1	0.19 0.06
8-2	cis-Heptachlor epoxide			2.1 0.8	0.5 0.2
8-3	trans-Heptachlor epoxide			7 3	0.03 0.01
9	Toxaphenes（Reference）				
9-1	Parlar-26（refernce）			23 9	
9-2	Parlar-50（refernce）			30 10	
9-3	Parlar-62（refernce）			150 60	
10	Mirex（refernce）				
11	HCHs				
11-1	α-HCH	1.2 0.4	0.7 0.3	3.0 1.0	0.17 0.06
11-2	β-HCH	1.2 0.4	0.8 0.3	3.0 1.0	0.25 0.08
11-3	γ-HCH（Synonym: Lindane）	0.9 0.3	0.5 0.2	4.8 1.6	0.19 0.06
11-4	δ-HCH	0.3 0.1	0.5 0.2	2.1 0.8	0.15 0.05

Registry Number	Target substance	Water quality (pg/L)	Bottom Sediment (pg/g-dry)	Organism (pg/g-wet)	Air(pg/㎥)
12	Chlordecone (Reference)				
13	Hexabromobiphenyl derivatives (Reference)		0.8 0.3	14 5	0.06 0.02
14	Polybrominated diphenyl ether derivatives (4～10 bromide)				
14-1	Tetrabromodiphenyl ether derivatives	3.6 1.2	21 7	15 6	0.4 0.1
14-2	Pentabromodiphenyl ether derivatives	6.3 2.1	18 6	13 5	0.6 0.2
14-3	Hexabromodiphenyl ether derivatives	1.5 0.6	3 1	12 5	1.1 0.4
14-4	Heptabromodiphenyl ether derivatives	2.0 0.8	3 1	12 5	1.3 0.4
14-5	Octabromodiphenyl ether derivatives	1.5 0.6	48 16	14 5	1.1 0.4
14-6	Nonabromodiphenyl ether derivatives	6 2	24 8	23 9	3.2 1.1
14-7	Decabromodiphenyl ether	18 7	40 20	170 70	2.2 0.7
15	Perfluorooctane sulfonic acid (PFOS)	29 11	3 1	4 2	0.19 0.06
16	Perfluorooctane acid (PFOA)	56 22	3 1	10 3.4	4.2 1.4
17	Pentachlorobenzene	1.5 0.5	1.5 0.5	12 4.0	0.6 0.2
18	Endosulfans				
18-1	α-Endosulfan			120 38	1.0 0.3
18-2	β-Endosulfan			32 11	0.5 0.2
19	1,2,5,6,9,10-Hexabromocyclododecane derivatives				
19-1	α-1,2,5,6,9,10-Hexabromocyclododecane		150 60	30 10	0.9 0.3
19-2	β-1,2,5,6,9,10-Hexabromocyclododecane		150 60	30 10	0.8 0.3
19-3	ε-1,2,5,6,9,10-Hexabromocyclododecane		110 42	30 10	0.8 0.3
19-4	ε-1,2,5,6,9,10-Hexabromocyclododecane		180 70	30 10	1.9 0.6
19-5	ε-1,2,5,6,9,10-Hexabromocyclododecane		130 51	30 10	0.9 0.3
20	Perfluorooctane acid (PFOA)*			54 18	
21	hexachlorobutadiene, HCBD（Reference）				29 11
22	Pentachlorophenol	260 85			

Notes:

・Upper row refers to lower limit of quantification and lower row refers to detection limit.

・* refers to the total of lower limits of quantification by each homologue or relevant substance.

・Shaded areas refer to media out of the scope of the survey.

Source: "Chemicals in the Environment FY2016," Ministry of the Environment, "Report on Environmental Survey and Monitoring of Chemicals FY 2015" (A list of values of detection limit)

7.12 Amount of releases and transfers based on PRTR by industry

Industry	Reported numbers	Releases (kg/year)					Transfers (kg/year)			Total amount of Releases and transfers (kg/year)	Rate
		Air	Public waters	Soil	Landfill	Total	Waste transfer	Transfer to sewage	Total		
Mining and smelting	22	2	124,132	1,900	26,379	152,412	1,020	0	1,020	153,432	0.04%
oil and natural gas industry	25	16,067	192,457	0	0	208,524	83	0	83	208,607	0.06%
Manufacturing	13,019	133,812,552	2,630,106	1,112	7,396,498	143,840,267	219,205,407	1,176,323	220,381,730	364,221,998	96.40%
Manufacture of food	443	2,949,208	1,220	0	0	2,950,428	291,315	1,710	293,024	3,243,452	0.86%
Manufacture of beverages, tobacco and feed	134	15,053	50	1	0	15,104	32,236	0	32,236	47,340	0.01%
Manufacture of textile mill products	169	1,816,174	130,657	0	0	1,946,832	1,061,039	60,410	1,121,449	3,068,281	0.81%
Manufacture of apparel and other finished products made from fabrics and similar materials	26	82,901	8,638	0	0	91,539	153,504	510	154,014	245,553	0.06%
Manufacture of lumber and wood products	201	1,422,517	813	177	0	1,423,507	56,761	21	56,782	1,480,289	0.39%
Manufacture of furniture and fixtures	89	660,480	7	0	0	660,487	182,587	49	182,636	843,123	0.22%
Manufacture of pulp, paper and paper products	425	5,780,528	198,219	0	270	5,979,018	1,472,903	5,077	1,477,980	7,456,997	1.97%
Publishing, printing and allied industries	311	6,599,219	8	0	0	6,599,227	2,091,601	191	2,091,793	8,691,019	2.30%
Manufacture of chemical and allied products	2,321	17,046,865	1,168,580	234	96	18,215,775	83,355,199	790,460	84,145,659	102,361,434	27.09%
Manufacture of petroleum and coal products	601	1,139,249	60,009	0	0	1,199,257	693,131	23,873	717,004	1,916,261	0.51%
Manufacture of plastic products	1,075	17,923,502	8,867	17	0	17,932,386	10,718,036	26,617	10,744,653	28,677,039	7.59%
Manufacture of rubber products	297	5,868,086	4,642	0	0	5,872,728	1,223,929	1,900	1,225,829	7,098,557	1.88%
Manufacture of leather tanning, leather products and fur skins	22	91,242	14	0	0	91,257	45,417	12,590	58,007	149,263	0.04%
Manufacture of ceramic, stone and clay products	575	3,277,160	35,284	2	110	3,312,556	14,594,975	18,011	14,612,986	17,925,541	4.74%
Manufacture of iron and steel	379	2,928,944	368,458	0	26,100	3,323,502	67,689,552	6,637	67,696,189	71,019,691	18.80%
Manufacture of non-ferrous metals and products	540	1,684,831	296,195	8	7,369,918	9,350,953	5,845,494	31,811	5,877,305	15,228,257	4.03%
Manufacture of fabricated metal products	1,792	12,409,191	81,291	670	3	12,491,156	10,630,922	27,098	10,658,020	23,149,176	6.13%
Manufacture of general machinery	820	8,028,960	1,837	3	0	8,030,800	2,391,742	6,100	2,397,842	10,428,642	2.76%
Manufacture of electrical machinery, equipment and supplies	1,294	5,162,060	158,096	0	0	5,320,156	10,305,305	124,513	10,429,818	15,749,974	4.17%
Manufacture of transportation equipment	1,167	36,766,783	63,212	0	0	36,829,995	4,645,256	35,221	4,680,476	41,510,471	10.99%
Manufacture of precision instruments and	240	955,985	43,848	0	0	999,833	1,249,682	2,997	1,252,679	2,252,512	0.60%
Manufacture of ordnance and accessories	6	10,332	0	0	0	10,332	3,365	0	3,365	13,697	0.00%
Miscellaneous manufacturing industries	92	1,193,280	163	0	0	1,193,442	471,457	529	471,986	1,665,428	0.44%
Electricity industry	216	347,391	2,317	0	0	349,709	512,521	6,403	518,924	868,633	0.23%
Gas industry	35	23,625	0	0	0	23,625	0	0	0	23,625	0.01%
Heat supply industry	15	1,306	1,800	0	0	3,106	0	1,200	1,200	4,306	0.00%
Sewage industry	2,012	1,187	3,913,072	19	0	3,914,277	68,389	3,039	71,427	3,985,705	1.05%
Railway industry	57	74,165	0	0	0	74,165	180,901	162	181,062	255,227	0.07%
Warehouse industry	128	805,151	12,046	0	0	817,197	69,081	0	69,081	886,278	0.23%
Petroleum wholesale industry	480	960,281	0	0	0	960,281	4,824	0	4,824	965,105	0.26%
Scrap iron wholesale industry	7	42	0	0	0	42	5,233	0	5,233	5,275	0.00%
Automobile maintenance industry	8	8,342	0	0	0	8,342	3,128	0	3,128	11,470	0.00%
Fuel retail industry	16,094	2,844,786	1	1	0	2,844,787	1,054	0	1,054	2,845,841	0.75%
Laundry industry	152	189,450	98	0	0	189,548	188,411	3,276	191,686	381,235	0.10%
Photography industry	2	4,000	0	0	0	4,000	2,100	0	2,100	6,100	0.00%
Automobile maintenance industry	157	296,095	0	0	0	296,095	42,520	0	42,520	338,615	0.09%
Machinery and equipment repair industry	22	71,473	321	0	0	71,794	42,090	3,100	45,190	116,984	0.03%
Product testing industry	29	4,057	0	0	0	4,057	69,730	0	69,730	73,787	0.02%
Measurement certification industry	36	10,182	4,100	0	0	14,282	88,629	96	88,725	103,007	0.03%
Household waste disposal industry	1,756	929	78,273	1	1	79,203	14,591	176	14,767	93,970	0.02%
Industrial waste disposal industry	473	39,148	133,478	0	44	172,671	614,877	2	614,879	787,549	0.21%
Medical and other health services	118	10,863	0	0	0	10,863	52,367	0	52,367	63,230	0.02%
Higher educational institutions	141	97,739	294	0	0	98,033	651,773	776	652,549	750,582	0.20%
Research institutes for natural science	270	39,020	68	21	0	39,109	628,023	295	628,318	667,427	0.18%
Industry covered	35,274	139,657,850	7,092,563	3,053	7,422,921	154,176,387	222,446,752	1,194,847	223,641,598	377,817,985	100%
Rate (%)		36.96%	1.88%	0.00%	1.96%	40.81%	58.88%	0.32%	59.19%	100%	

Note:

"Total amount of Releases and transfers", being sums of the data (having 1 digit after the decimal place except Dioxins) reported by each business entities, are represented in an integer format by rounding off at the first decimal digit. Thus, the sums of each row or columns in this table may not foot.

Source: "Overview of the PRTR system in FY 2015," Ministry of the Environment

7.13 Amounts of releases and transfers based on PRTR by prefecture

	Reported numbers	Releases (kg / year)					Transfers (kg / year)			Total of Releases and transfers (kg / year)	Rate
		Air	Public waters	Soil	Landfill	Total	Waste transfer	Transfer to sewage	Total		
Hokkaido	1,894	1,795,986	382,420	3	314	2,178,724	1,952,005	1,331	1,953,336	4,132,060	1.09%
Aomori	434	505,725	105,318	0	1	611,044	1,029,064	199	1,029,263	1,640,307	0.43%
Iwate	517	1,377,665	51,139	21	0	1,428,825	1,243,878	4,267	1,248,145	2,676,970	0.71%
Miyagi	716	1,123,476	115,839	0	126,008	1,365,323	865,132	3,212	868,344	2,233,667	0.59%
Akita	480	459,247	111,114	3	2,737,570	3,307,934	1,285,460	1	1,285,462	4,593,396	1.22%
Yamagata	477	721,501	40,149	0	0	761,649	1,817,512	8,012	1,825,524	2,587,173	0.68%
Fukushima	899	2,660,327	277,725	0	0	2,938,052	4,826,348	0	4,826,348	7,764,400	2.06%
Ibaraki	1,125	6,438,835	138,778	0	25,000	6,602,614	6,047,659	415,436	6,463,094	13,065,708	3.46%
Tochigi	737	4,804,450	77,234	0	0	4,881,684	3,830,030	9,487	3,839,517	8,721,201	2.31%
Gunma	780	4,200,695	61,310	0	96	4,262,101	4,368,015	102,776	4,470,791	8,732,891	2.31%
Saitama	1,539	7,107,442	239,556	0	0	7,346,998	9,615,665	58,203	9,673,868	17,020,866	4.51%
Chiba	1,312	5,705,934	306,182	58	0	6,012,174	17,274,053	1,336	17,275,389	23,287,563	6.16%
Tokyo	1,168	1,241,308	420,759	0	0	1,662,067	2,052,042	21,656	2,073,698	3,735,765	0.99%
Kanagawa	1,421	5,267,529	284,081	0	0	5,551,611	8,141,853	180,168	8,322,020	13,873,631	3.67%
Niigata	992	2,207,082	280,719	85	230,000	2,717,886	3,250,548	866	3,251,413	5,969,299	1.58%
Toyama	517	1,583,119	129,637	0	0	1,712,756	4,015,364	191	4,015,555	5,728,311	1.52%
Ishikawa	445	1,733,238	169,135	0	0	1,902,373	2,444,017	449	2,444,466	4,346,839	1.15%
Fukui	358	1,926,648	70,972	0	0	1,997,620	4,190,821	30,268	4,221,089	6,218,709	1.65%
Yamanashi	326	1,381,980	9,176	0	0	1,391,155	608,708	1,363	610,071	2,001,226	0.53%
Nagano	1,149	1,654,600	103,645	0	0	1,758,245	979,809	11,249	991,058	2,749,303	0.73%
Gifu	883	4,158,107	60,551	0	1,359,899	5,578,556	3,082,128	2,524	3,084,652	8,663,208	2.29%
Shizuoka	1,499	7,356,746	186,798	1	0	7,543,545	5,294,813	13,192	5,308,006	12,851,551	3.40%
Aichi	2,049	10,509,387	387,761	1	0	10,897,150	29,439,524	42,698	29,482,223	40,379,372	10.69%
Mie	773	4,606,658	148,492	2	0	4,755,153	5,140,305	389	5,140,694	9,895,846	2.62%
Shiga	634	3,390,378	34,579	0	0	3,424,957	3,753,376	23,561	3,776,937	7,201,894	1.91%
Kyoto	568	1,834,037	119,454	0	0	1,953,491	1,204,352	106,225	1,310,576	3,264,067	0.86%
Osaka	1,579	3,562,414	588,674	0	0	4,151,088	12,523,813	52,559	12,576,371	16,727,459	4.43%
Hyogo	1,531	6,264,219	359,331	8	1,924	6,625,483	14,217,774	57,111	14,274,884	20,900,367	5.53%
Nara	300	460,830	23,442	0	0	484,272	673,378	96	673,474	1,157,745	0.31%
Wakayama	277	974,323	55,154	8	0	1,029,485	2,387,043	1,878	2,388,922	3,418,407	0.90%
Tottori	238	547,071	4,589	0	0	551,660	226,090	1,203	227,293	778,953	0.21%
Shimane	255	1,982,447	98,824	0	0	2,081,270	980,736	40	980,776	3,062,046	0.81%
Okayama	829	3,962,251	171,235	1	110	4,133,597	9,157,462	11,577	9,169,039	13,302,636	3.52%
Hiroshima	865	6,375,957	200,762	191	2,937,885	9,514,795	4,602,004	10,488	4,612,492	14,127,287	3.74%
Yamaguchi	540	3,507,357	335,438	83	0	3,842,878	11,155,906	246	11,156,152	14,999,029	3.97%
Tokushima	277	429,810	42,936	0	0	472,746	659,546	0	659,546	1,132,292	0.30%
Kagawa	379	4,482,368	34,317	0	0	4,516,685	1,159,672	3,557	1,163,230	5,679,915	1.50%
Ehime	515	4,989,537	128,700	10	4,114	5,122,361	6,023,506	0	6,023,506	11,145,866	2.95%
Kochi	180	451,887	15,063	0	0	466,950	109,708	3,900	113,608	580,558	0.15%
Fukuoka	1,194	6,164,992	182,617	670	0	6,348,279	17,134,304	5,281	17,139,585	23,487,864	6.22%
Saga	332	1,843,948	19,611	9	0	1,863,567	689,165	124	689,289	2,552,856	0.68%
Nagasaki	356	3,659,974	46,740	0	0	3,706,714	377,187	3,611	380,798	4,087,511	1.08%
Kumamoto	554	1,917,018	120,785	0	0	2,037,803	4,999,011	2,508	5,001,518	7,039,321	1.86%
Oita	391	1,401,788	75,110	0	0	1,476,898	2,762,824	680	2,763,504	4,240,402	1.12%
Miyazaki	326	326,949	140,415	0	0	467,364	4,495,745	930	4,496,675	4,964,039	1.31%
Kagoshima	452	416,851	123,118	1,900	0	541,869	123,322	4	123,326	665,195	0.18%
Okinawa	212	183,760	13,180	0	0	196,940	236,072	0	236,072	433,012	0.11%
Nationwide	35,274	139,657,850	7,092,563	3,053	7,422,921	154,176,387	222,446,752	1,194,847	223,641,598	377,817,985	100%
Rate (%)		36.96%	1.88%	0.00%	1.96%	40.81%	58.88%	0.32%	59.19%	100%	

Note:

"Total amount of Releases and transfers", being sums of the data (having 1 digit after the decimal place except Dioxins) reported by each business entities, are represented in an integer format by rounding off at the first decimal digit. Thus, the sums of each row or columns in this table may not foot.

Source: "Overview of the PRTR system in FY 2015," Ministry of the Environment

7.14 Reported releases and estimated releases by prefecture

	Reported numbers	Reported releases (kg / year)	Estimated releases (kg / year)					Total of Reported releases and estimated releases (kg/year)	Rate
			From Industries subject to reporting	From Industries NOT subject to reporting	From Households	From mobile sources	Subtotal		
Hokkaido	1,894	2,178,724	1,653,665	6,387,294	1,268,553	2,820,561	12,130,074	14,308,797	3.73%
Aomori	434	611,044	420,209	2,535,918	906,234	839,761	4,702,122	5,313,166	1.39%
Iwate	517	1,428,825	384,096	1,262,126	766,451	922,331	3,335,003	4,763,828	1.24%
Miyagi	716	1,365,323	655,286	1,103,716	824,891	1,124,479	3,708,373	5,073,695	1.32%
Akita	480	3,307,934	414,896	772,831	623,400	636,825	2,447,951	5,755,885	1.50%
Yamagata	477	761,649	482,707	918,889	468,204	722,151	2,591,952	3,353,601	0.87%
Fukushima	899	2,938,052	1,052,705	1,099,686	1,034,231	1,088,772	4,275,394	7,213,446	1.88%
Ibaraki	1,125	6,602,614	1,534,462	3,573,135	1,506,079	1,763,219	8,376,896	14,979,510	3.91%
Tochigi	737	4,881,684	827,732	1,216,171	934,460	1,322,149	4,300,512	9,182,196	2.39%
Gunma	780	4,262,101	1,001,004	2,655,697	1,180,058	1,252,863	6,089,621	10,351,722	2.70%
Saitama	1,539	7,346,998	2,436,194	1,720,190	2,339,688	2,322,117	8,818,190	16,165,188	4.22%
Chiba	1,312	6,012,174	1,537,703	3,509,196	2,378,901	2,263,744	9,689,543	15,701,717	4.10%
Tokyo	1,168	1,662,067	3,937,740	8,185,764	1,633,732	2,643,768	16,401,004	18,063,071	4.71%
Kanagawa	1,421	5,551,611	2,297,298	3,926,275	1,491,928	2,178,698	9,894,200	15,445,811	4.03%
Niigata	992	2,717,886	987,022	1,488,781	1,144,620	1,295,283	4,915,707	7,633,592	1.99%
Toyama	517	1,712,756	466,484	803,974	394,084	561,252	2,225,793	3,938,550	1.03%
Ishikawa	445	1,902,373	586,640	771,354	444,943	597,304	2,400,241	4,302,614	1.12%
Fukui	358	1,997,620	429,722	719,976	319,784	530,960	2,000,442	3,998,062	1.04%
Yamanashi	326	1,391,155	420,627	519,478	457,520	669,850	2,067,475	3,458,630	0.90%
Nagano	1,149	1,758,245	888,652	1,475,884	758,677	1,509,862	4,633,076	6,391,320	1.67%
Gifu	883	5,578,556	922,072	948,043	940,594	1,210,970	4,021,678	9,600,235	2.50%
Shizuoka	1,499	7,543,545	1,685,027	2,019,499	1,884,279	1,789,609	7,378,414	14,921,959	3.89%
Aichi	2,049	10,897,150	3,280,819	3,512,769	2,947,866	2,557,603	12,299,058	23,196,207	6.05%
Mie	773	4,755,153	706,708	804,834	998,206	1,288,725	3,798,473	8,553,626	2.23%
Shiga	634	3,424,957	447,613	362,074	430,335	862,595	2,102,617	5,527,575	1.44%
Kyoto	568	1,953,491	1,050,436	669,865	625,732	1,041,114	3,387,146	5,340,637	1.39%
Osaka	1,579	4,151,088	3,447,829	3,006,771	1,771,316	2,020,130	10,246,046	14,397,134	3.76%
Hyogo	1,531	6,625,483	1,771,117	1,370,232	1,289,181	1,783,301	6,213,832	12,839,314	3.35%
Nara	300	484,272	401,834	312,444	547,977	733,078	1,995,334	2,479,606	0.65%
Wakayama	277	1,029,485	353,659	999,030	816,860	614,167	2,783,716	3,813,201	0.99%
Tottori	238	551,660	171,189	463,172	310,869	448,101	1,393,331	1,944,990	0.51%
Shimane	255	2,081,270	247,136	573,796	494,816	524,824	1,840,573	3,921,843	1.02%
Okayama	829	4,133,597	654,393	904,042	949,667	1,038,467	3,546,569	7,680,166	2.00%
Hiroshima	865	9,514,795	1,110,898	1,578,354	1,207,561	1,354,465	5,251,277	14,766,072	3.85%
Yamaguchi	540	3,842,878	463,410	2,955,624	672,073	862,954	4,954,060	8,796,938	2.29%
Tokushima	277	472,746	422,708	859,702	639,890	467,408	2,389,708	2,862,454	0.75%
Kagawa	379	4,516,685	344,123	522,486	588,547	591,263	2,046,419	6,563,104	1.71%
Ehime	515	5,122,361	543,878	1,303,266	866,739	800,553	3,514,437	8,636,797	2.25%
Kochi	180	466,950	242,222	1,052,338	504,794	440,362	2,239,716	2,706,666	0.71%
Fukuoka	1,194	6,348,279	1,509,823	2,577,483	1,675,790	1,760,192	7,523,287	13,871,566	3.62%
Saga	332	1,863,567	264,145	824,314	470,020	642,524	2,201,004	4,064,571	1.06%
Nagasaki	356	3,706,714	610,671	1,337,414	776,753	820,800	3,545,637	7,252,351	1.89%
Kumamoto	554	2,037,803	598,973	1,987,544	817,160	1,057,153	4,460,830	6,498,633	1.70%
Oita	391	1,476,898	370,540	703,926	765,170	795,625	2,635,261	4,112,159	1.07%
Miyazaki	326	467,364	360,745	2,002,204	609,009	711,758	3,683,716	4,151,080	1.08%
Kagoshima	452	541,869	526,171	2,813,058	946,944	907,060	5,193,233	5,735,103	1.50%
Okinawa	212	196,940	475,461	739,493	714,700	660,032	2,589,687	2,786,627	0.73%
Nationwide	35,274	154,176,387	45,398,444	81,850,113	46,139,288	55,831,785	229,219,631	383,396,018	100%
Rate(%)		40.21%	11.84%	21.35%	12.03%	14.56%	59.79%	100%	

Notes:

・Part of mobile sources can't be allocated to each prefecture, thus the total of all prefectures and "Total" are not consistent.

・"Total amount of Releases and transfers", being sums of the data (having 1 digit after the decimal place except Dioxins) reported by each business entities, are represented in an integer format by rounding off at the first decimal digit. Thus, the sums of each row or columns in this table may not foot.

Source: "Overview of the PRTR system in FY 2015," Ministry of the Environment

7.15 PRTR top ten substances of reported releases and transfers

（Unit: t / year）

PRTR chemicals	Reported releases	Reported transfers	Reported releases and Reported transfers in total
Toluene	52,452	34,534	86,986
Manganese and its compounds	2,297	51,017	53,314
Xylene	28,058	8,391	36,448
Chromium and chromium(III) compounds	157	21,511	21,668
Ethylbenzene	14,891	3,417	18,308
Hydrogen fluoride and its water-soluble salts	1,957	14,953	16,910
Methyl chlorides	9,878	6,955	16,833
n - Hexane	10,171	3,681	13,851
N,N-dimethylformamide	2,087	6,459	8,546
Ferric chlorides	4,096	4,138	8,234

Note:

・Due to rounding off, total may not be consistent with the sum of a row.

Source: "Overview of the PRTR system in FY 2015," Ministry of the Environment

7.16 PRTR top ten substances of reported releases and estimated releases

（Unit: t / year）

PRTR chemicals	Reported releases	Estimated Releases	Reported releases and releases outside notification in total
Toluene	52,452	40,870	93,323
Xylene	28,058	40,269	68,326
Ethylbenzene	14,891	18,151	33,042
Polyoxyethylene alkyl ether (C=12-15)	89	20,765	20,854
n-Hexane	10,171	6,616	16,786
Dichloromethane (alias: methylene dichloride)	9,878	1,835	11,713
Linear alkylbenzene sulfonate (C=10-14)	13	11,171	11,185
Dichlorobenzene	96	8,538	8,634
D-D	4	8,435	8,439
Chlorodifluoromethane (alias HCFC-22)	183	8,191	8,374

Source: "Overview of the PRTR system in FY 2015," Ministry of the Environment

8.01 ① Budget for competitive funding on environmental research and development of environmental technology

（Unit: million yen）

	Name of competitive fund systems					
	Global Environment Research Fund [1]	Environmental Research・Environmental Technology Development Fund [1), 2)]	Environment Research Fund	Grant-in-Aid for Scientific Research about Establishing a Sound Material-cycle Society [3]	Project of Developing Countermeasures against Global Warming (energy-related expenditures) [4]	Total
Budget amount of FY2004	3,015	815	-	1,150	1,634	6,614
FY 2005	3,015	815	-	1,150	2,676	7,656
FY 2006	3,256	881	-	1,300	2,716	8,153
FY 2007	2,960	881	-	1,261	3,302	8,404
FY 2008	3,197	836	-	1,135	3,710	8,878
FY 2009	3,955	1,160	-	1,803	3,805	10,723
FY 2010	-	-	5,269	1,738	5,022	12,029
FY 2011	-	-	8,007	-	6,200	14,207
FY 2012	-	-	6,670	-	6,720	13,390
FY 2013	-	-	6,160	-	-	6,160
FY 2014	-	-	5,510	-	-	5,510
FY 2015	-	-	5,300	-	-	5,300
FY2016	-	-	5,293	-	-	5,293

Note:
1) In FY 2010, integrated in 'Environment Research and Technology Fund.'
2) Up to FY 2008, called as "Promotional fund for Environmental Technology Development."
3) Up to FY 2008, called as "Promotional Subsidies for Scientific Research on Waste Treatment ." In FY 2011, integrated in 'Environmental Research.'
4) Up to FY 2012, 'Competitive fund.'

Source: Referential materials by Ministry of the Environment

8.01 ② Number of employees in environmental divisions of local governments by prefecture

(Unit : Person)

	2011			2012			2013			2014			2015			2016		
	Pollution-control	Waste management	Environmental conservation	Pollution-control	Waste management	Environmental conservation	Pollution-control	Waste management	Environmental conservation	Pollution-control	Waste management	Environmental conservation	Pollution-control	Waste management	Environmental conservation	Pollution-control	Waste management	Environmental conservation
Hokkaido	241	740	293	240	684	294	232	654	300	235	632	311	232	602	306	225	596	303
Aomori	81	240	44	82	233	45	81	219	46	79	210	45	79	148	46	84	153	43
Iwate	47	201	67	52	196	61	51	184	59	52	164	63	50	158	65	50	151	60
Miyagi	87	114	83	114	141	82	107	136	76	112	113	81	113	103	85	113	96	84
Akita	25	238	72	23	227	67	25	215	62	24	198	65	23	190	62	23	172	61
Yamagata	63	141	115	65	143	119	62	139	121	62	131	119	60	75	116	60	75	116
Fukushima	83	326	195	206	311	205	283	302	221	346	288	240	358	275	180	332	264	190
Ibaraki	193	505	136	217	484	155	214	464	155	202	446	161	196	431	158	193	427	165
Tochigi	102	435	165	132	391	169	135	379	179	129	370	179	121	360	178	110	348	181
Gunma	124	446	119	133	419	130	130	391	127	125	380	123	123	365	118	122	356	118
Saitama	350	1,195	298	357	1,157	298	345	1,135	296	335	1,113	295	340	1,098	306	339	1,080	298
Chiba	294	1,337	296	345	1,304	282	334	1,272	282	309	1,242	290	294	1,220	304	283	1,200	306
Tokyo	710	5,541	660	712	5,360	663	696	5,232	662	684	5,160	668	680	5,096	676	679	5,029	678
Kanagawa	266	1,806	293	260	1,745	325	255	1,698	303	255	1,658	302	253	1,616	307	255	1,592	301
Niigata	89	309	126	93	272	127	101	264	125	104	246	121	104	216	121	102	201	121
Toyama	74	311	48	72	290	47	71	269	47	70	250	48	70	235	49	68	225	49
Ishikawa	110	336	95	110	324	93	105	351	100	111	330	78	106	320	80	107	313	78
Fukui	69	107	74	70	104	74	69	100	74	63	96	81	65	94	82	59	91	89
Yamanashi	32	170	108	32	163	106	32	155	111	30	149	111	31	143	119	32	140	119
Nagano	128	258	252	130	258	259	128	249	267	124	254	262	124	243	267	122	235	265
Gifu	55	711	129	51	700	124	58	677	119	55	659	123	57	637	120	57	628	123
Shizuoka	154	882	120	138	644	111	142	616	112	141	611	110	139	582	117	139	568	116
Aichi	468	1,233	215	473	1,414	235	468	1,360	241	459	1,343	244	457	1,312	223	456	1,304	219
Mie	124	686	75	120	652	75	116	612	76	120	583	78	119	574	79	118	551	81
Shiga	100	242	119	101	235	116	98	240	116	100	235	113	97	234	112	98	220	120
Kyoto	75	359	87	73	347	89	70	346	86	71	343	94	70	337	92	69	332	92
Osaka	348	2,222	261	332	2,115	252	325	2,035	243	315	1,979	236	302	1,941	226	301	1,922	211
Hyogo	222	1,727	177	221	1,677	179	216	1,610	177	209	1,525	168	211	1,486	174	209	1,444	178
Nara	58	962	68	60	918	74	63	903	77	59	873	77	56	846	81	43	836	74
Wakayama	52	464	46	54	424	46	54	412	48	51	394	48	51	376	46	51	359	45
Tottori	26	73	45	27	67	42	27	67	45	27	58	42	27	56	39	28	54	42
Shimane	45	173	52	51	170	54	52	163	49	54	159	48	55	150	52	56	146	48
Okayama	77	390	46	73	378	49	73	349	48	72	361	49	71	355	51	72	335	52
Hiroshima	153	552	97	155	517	100	154	484	97	151	447	95	144	423	98	147	421	94
Yamaguchi	74	762	63	73	749	68	68	722	68	70	693	66	68	679	69	71	655	70
Tokushima	56	532	54	55	516	49	54	506	48	53	491	51	53	480	55	54	468	55
Kagawa	70	411	49	69	401	49	70	389	49	69	380	50	68	368	48	68	358	46
Ehime	103	373	82	104	363	81	102	350	80	106	338	73	104	319	75	104	302	73
Kochi	31	256	77	29	241	84	80	242	81	30	239	76	28	234	78	29	228	74
Fukuoka	123	583	188	127	548	197	120	526	199	120	500	197	120	478	194	121	456	201
Saga	37	195	46	37	181	43	36	182	23	37	182	42	36	172	43	44	170	42
Nagasaki	95	611	114	93	588	109	98	546	54	95	526	107	96	516	110	92	494	106
Kumamoto	110	474	138	108	120	86	108	117	88	101	111	84	100	108	83	103	107	79
Oita	75	533	67	75	502	72	72	479	72	74	459	69	73	438	70	74	429	69
Miyazaki	45	331	86	45	309	89	45	291	86	44	279	82	44	262	83	45	248	85
Kagoshima	87	397	115	86	381	119	79	366	117	82	343	117	82	331	110	85	323	108
Okinawa	58	153	58	57	153	62	60	152	59	41	144	79	40	143	81	38	151	90
Sapporo City	20	828	46	20	819	47	19	805	51	20	790	52	20	775	51	19	746	48
Sendai City	17	265	22	17	270	22	17	261	22	18	239	24	18	236	24	18	235	23
Saitama City	23	467	17	23	453	18	22	430	19	22	416	21	22	387	21	20	364	20
Chiba City	27	200	33	26	184	32	25	165	30	26	159	29	24	154	30	24	155	31
Yokohama City	115	1,846	144	117	1,803	139	117	1,756	145	124	1,803	148	126	1,793	153	124	1,807	163
Kawasaki City	107	1,200	76	109	1,148	74	107	1,121	74	108	1,088	61	106	1,038	60	90	1,011	66
Sagamihara City	25	372	13	24	366	13	26	360	13	26	346	13	26	346	13	26	324	13
Niigata City	16	257	11	15	228	14	16	215	16	15	203	14	15	197	14	16	180	14
Shizuoka City	12	281	26	12	273	25	12	262	25	12	249	26	12	239	25	12	232	25
Hamamatsu City	13	234	38	12	2,312	31	12	214	31	12	214	30	12	206	32	13	194	30
Nagoya City	168	1,498	45	166	1,462	44	166	1,420	42	169	1,416	47	163	1,378	42	165	1,349	42
Kyoto City	93	1,154	11	98	1,141	10	95	1,116	9	105	1,052	10	106	1,008	11	105	985	12
Osaka City	168	2,971	0	157	2,862	0	154	2,696	0	121	2,692	0	116	2,157	0	121	2,092	0
Sakai City	40	224	26	40	207	25	40	203	25	19	200	47	19	190	47	20	181	47
Kobe City	70	1,264	0	70	1,216	0	70	1,166	0	66	1,129	0	67	1,101	0	64	1,077	0
Okayama City	12	427	11	12	419	11	11	409	12	12	398	11	12	390	11	12	377	12
Hiroshima City	16	460	25	15	446	21	15	442	21	15	438	21	15	437	22	15	419	23
Kitakyushu City	36	371	53	37	368	50	36	354	45	37	343	48	51	332	44	50	312	43
Fukuoka City	12	316	24	11	303	29	13	309	30	14	295	27	15	288	30	11	291	28
Kumamoto City				4	350	49	4	322	49	4	317	49	4	312	48	5	266	43
Partial-affairs associations, etc.	5	7,728	5	5	7,484	4	5	7,200	4	1	7,063	6	0	7,326	5	-	7,137	5
Subtotal	7,084	53,406	6,839	7,322	53,630	6,913	7,346	49,776	6,834	7,203	48,535	6,945	7,139	47,115	6,917	7,060	45,987	6,906
Total	67,329			67,865			63,956			62,683			61,171			59,953		

Note:
- Special wards, and also cities, towns and villages are included in prefectures (excluding ordinance-designated cities).
- Figures show the number of staffs on April 1st in each year.

Source: "Survey on the Total Number of Civil Servants in Local Governments," Ministry of Internal Affairs and Communications

8.02 Trainees at the National Environmental Research and Training Institute, Ministry of the Environment

(Unit: Persons)

FY	Administrative Training courses				Analytical Training courses				Total
	National government staff	Local public entity staff	Staff in public corporations, etc.	Subtotal	National government staff	Local public entity staff	Staff in public corporations, etc.	Subtotal	
1975	107	468	4	579	36	277	5	318	897
1976	110	472	7	589	34	204	5	243	832
1977	123	451	7	581	33	196	3	232	813
1978	184	512	13	709	25	210	3	238	947
1979	187	499	22	708	24	206	6	236	944
1980	190	517	37	744	18	175	2	195	939
1981	194	601	34	829	22	212	5	239	1,068
1982	198	551	35	784	10	168	2	180	964
1983	191	571	41	803	9	163	2	174	977
1984	195	519	61	775	6	152	7	165	940
1985	173	507	63	743	13	165	3	181	924
1986	234	650	135	1,019	14	167	2	183	1,202
1987	235	680	144	1,059	16	161	2	179	1,238
1988	209	639	125	973	21	148	3	172	1,145
1989	208	633	115	956	24	170	3	197	1,153
1990	211	628	103	942	19	172	4	195	1,137
1991	197	660	116	973	22	156	2	180	1,153
1992	199	639	109	947	16	162	0	178	1,125
1993	208	674	125	1,007	18	196	0	214	1,221
1994	160	614	113	887	16	221	0	237	1,124
1995	220	692	101	1,013	22	234	0	256	1,269
1996	209	661	114	984	25	199	0	224	1,208
1997	227	720	103	1,050	23	205	0	228	1,278
1998	231	766	48	1,045	21	208	0	229	1,274
1999	235	727	46	1,008	26	184	0	210	1,218
2000	233	867	57	1,157	22	201	0	223	1,380
2001	345	993	94	1,432	16	218	4	238	1,670
2002	332	1,003	76	1,411	8	236	7	251	1,662
2003	400	1,014	74	1,488	7	238	7	252	1,740
2004	375	1,096	72	1,543	11	236	10	257	1,800
2005	435	1,238	65	1,738	13	246	11	270	2,008
2006	387	1,303	60	1,750	10	232	12	254	2,004
2007	397	1,343	59	1,799	15	263	13	291	2,090
2008	345	975	52	1,372	13	259	14	286	1,658
2009	388	1,311	56	1,755	12	270	6	288	2,043
2010	295	945	43	1,283	1	211	5	217	1,500
2011	243	1,194	44	1,481	4	254	4	262	1,743
2012	238	1,268	42	1,548	7	274	7	288	1,836
2013	240	1,277	34	1,551	5	279	5	289	1,840
2014	272	1,299	39	1,610	4	267	9	280	1,890
2015	261	1,349	44	1,654	5	273	10	288	1,942
2016	261	1,349	44	1,654	5	273	10	288	1,942

Notes:

・In addition, 58 participants completed Environmental Administration Internship program (practical trainings).

・Besides, accepted 11 trainees through environmental aquatic monitoring project, a group training program, cnducted form September 7 to October 16 , in cooperation with the Japan International Cooperation Agency (JICA).

Source: "Annual Report of Training Courses," Ministry of the Environment

8.03 Changes in number of arrests for environmental crimes grouped by law

(Unit: Incident)

	Total	Waste Management and Public Cleansing Law	Water Pollution Control Law	Others
2006	6,030	5,301	5	724
2007	7,076	6,107	10	959
2008	7,173	6,124	5	1,044
2009	7,164	6,128	11	1,025
2010	7,179	6,183	5	991
2011	6,503	5,700	1	802
2012	6,503	5,655	4	844
2013	5,923	5,169	2	752
2014	5,628	4,909	2	717
2015	5,741	4,979	0	762
2016	5,832	5,075	0	757

Note:
"Others" includes Act on Conservation of Endangered Species of Wild Fauna and Flora, Wildlife Protection and Hunting Law, and Natural Parks Act, etc.

Source: Materials by National Police Agency

8.04 Number of arrests for violation of Waste Disposal Act by type

(2014) (Unit: Case)

	Illegal dumping	Violation of commission (note 1)	Unauthorized business (note 2)	Others	Total
Total number of incidents	2,531	24	24	2,330	4,409
Industrial waste	205	22	8	604	839
Municipal waste	2,326	2	16	1,726	4,070

(2015) (Unit: Case)

	Illegal dumping	Violation of commission (note 1)	Unauthorized business (note 2)	Others	Total
Total number of incidents	2,479	15	23	2,462	4,979
Industrial waste	202	13	8	526	749
Municipal waste	2,277	2	15	1,936	4,230

(2016) (Unit: Case)

	Illegal dumping	Violation of commission (note 1)	Unauthorized business (note 2)	Others	Total
Total number of incidents	2,629	11	11	2,424	5,075
Industrial waste	212	10	6	562	790
Municipal waste	2,417	1	5	1,862	4,285

Notes:

1. Violations against commissioning standards are included, but violations against re-commissioning between authorized businesses are not included.
2. Refers to Unauthorized businesses for collection and transportation of waste, and for the disposal of waste.

Source: Materials by National Police Agency

8.05 Changes in numbers of offenders normally accepted / processed

Year	Ordinary accepted		Processed			Prosecution rate (%)
			Prosecuted	Not prosecuted	Total	
2008	9,739	(100)	5,994	3,494	9,488	63.2
2009	9,688	(99)	5,598	3,719	9,317	60.1
2010	9,518	(98)	5,305	3,903	9,208	57.6
2011	8,862	(89)	4,821	3,740	8,561	56.3
2012	9,155	(94)	4,936	3,875	8,811	56.0
2013	8,699	(89)	4,767	3,719	8,486	56.2
2014	8,172	(84)	4,508	3,498	8,006	56.3
2015	8,177	(89)	4,431	3,481	7,912	56.0
2016	8,413	(92)	4,493	3,844	8,337	53.9

Notes:
- Figures in parentheses indicates the indices based on the figure in 2012 deemed to be 100.
- Prosecution rate is calculated by the following formula:

  Prosecution rate= (# of prosecuted persons ÷ (# of prosecuted + # of not prosecuted)) × 100

Source: Materials by Ministry of Justice

8.06 Regions under the Regional Environmental Pollution Control Programs

（As of March 31, 2017）

Region (Prefecture)	Designated municipalities					
Kashima (Ibaraki)	Kashimashi	Kamisushi				
Saitama (Saitama)	Saitamashi	Kumagayashi	Kawaguchishi	Gyodashi	Tokorozawashi	Kasukabeshi
	Sayamashi	Kounosushi	Ageoshi	Soukashi	Koshigayashi	Yashioshi
	Hasudashi	Sakadoshi	Tsurugashimashi	Inamachi		
Chiba (Chiba)	Chibashi	Ichikawashi	Funabashishi	Matsudoshi	Nodashi	Narashinoshi
	Kashiwashi	Ichiharashi	Nagareyamashi	Yachiyoshi	Abikoshi	Kamagayashi
	Kimitsushi	Inzaishi	Shiraishi			
Tokyo (Tokyo)	Chuo-ku	Minato-ku	Sumida-ku	Koto-ku	Shinagawa-ku	Ohta-ku
	Setagaya-ku	Kita-ku	Itabashi-ku	Adachi-ku	Hachiojishi	Machidashi
Kanagawa (Kanagawa)	Yokohamashi	Yokosukashi				
Niigata (Niigata)	Niigatashi					
Gifu (Gifu)	Gifushi	Kakamigaharashi				
Fuji (Shizuoka)	Fujishi					
Aichi (Aichi)	Nagoyashi	Toyohashishi	Okazakishi	Hekinanshi	Anjyoshi	Komakishi
Kyoto (Kyoto)	Kyotoshi	Ujishi	Mukoshi	Nagaokakyoshi	Oyamazaki-cho	
Osaka (Osaka)	Osakashi	Sakaishi	Kishiwadashi	Toyonakashi	Ikedashi	Suitashi
	Izumiotsushi	Takatsukishi	Kaizukashi	Hirakatashi	Ibarakishi	Yaoshi
	Izumisanoshi	Tondabayashishi	Neyagawashi	Kawachinaganoshi	Matsubarashi	Daitoushi
	Izumishi	Minohshi	Kashiwarashi	Habikinoshi	Kadomashi	Settsushi
	Fujiiderashi	Higashiosakashi	Shijyonawateshi	Katanoshi	Osakasayamashi	Tadaoka-cho
Hyogo (Hyogo)	Kobeshi	Amagasakishi	Nishinomiyashi	Itamishi	Kakogawashi	Takarazukashi
	Kawanishishi					
Nara (Nara)	Narashi	Yamatotakadashi	Yamatokoriyamashi	Tenrishi	Ikomashi	Ohji-cho
Wakayama (Wakayama)	Wakayamashi					
Okayama/Kurashiki (Okayama)	Okayamashi	Kurashikishi	Tamanoshi	Hayashima-cho		
Bingo (Okayama/Hiroshima)	Fukuyamashi	Kasaokashi				
Hiroshima (Hiroshima)	Hiroshimashi					
Kagawa (Kagawa)	Sakaideshi					
Fukuoka (Fukuoka)	Fukuokashi					
Kitakyushu (Fukuoka)	Kitakyushushi					
Ohmuta (Fukuoka)	Ohmutashi					
21 regions, 18 prefectures, 117 cities and towns (102 cities, 5 towns, 10 wards)						

Source: Ministry of the Environment

8.07 The Costs relating to the Pollution Prevention Projects, and Additional Subsidies

（Unit: 100 million yen）

	FY2012		FY2013		FY2014		FY2015		FY2016	
	Project	Subsidies	Project	Subsidies	Project	Subsidies	Project	Subsidies	Project	Subsidies
Sewage （terminal treatment facilities）	1,718	1	1,524	0	1,598	1	1,536	1	1,492	1
Dredging/water conveyance	25	9	26	8	26	9	23	7	24	8
Land improvement for contaminated farmland etc.	3	0	2	0	0	0	0	0	2	0
Measures for soil contamination by Dioxins	0	0	0	0	0	0	0	0	0	0
Total	1,745	10	1,552	9	1,623	10	1,558	8	1,518	9

Note: The sum of the costs in each column may not match the total value due to rounding.

Source: Ministry of the Environment

8.08 Existing number of Patients by Region, subject to Law Concerning Pollution-Related Health Damage Compensation and other Measures

(As of the end of March, 2016)

Group		Area			Municipalities	Designation date	Certified patients
Former Class I Region / Nonspecific disease	Chronic bronchitis Asthma Asthmatic bronchitis, Emphysema and their sequelae	Chiba	Southern Sea front	Area	Chiba-shi	November 30, 1974	241
		Tokyo	Chiyoda-ku	All area	Chiyoda-ku	November 30, 1974	126
		〃	Chuo-ku	〃	Chuo-ku	December 19, 1975	192
		〃	Minato-ku	〃	Minato-ku	November 30, 1974	333
		〃	Shinjuku	〃	Shinjuku-ku	〃	868
		〃	Bunkyo-ku	〃	Bunkyo-ku	〃	399
		〃	Taito-ku	〃	Taito-ku	December 19, 1975	371
		〃	Shinagawa-ku	〃	Shinagawa-ku	November 30, 1974	706
		〃	Ota-ku	〃	Ota-ku	〃	1,524
		〃	Meguro-ku	〃	Meguro-ku	December 19, 1975	447
		〃	Shibuya-ku	〃	Shibuya-ku	November 30, 1974	428
		〃	Toshima-ku	〃	Toshima-ku	December 19, 1975	518
		〃	Kita-ku	〃	Kita-ku	〃	815
		〃	Itabashi-ku	〃	Itabashi-ku	〃	1,450
		〃	Sumida-ku	〃	Sumida-ku	〃	543
		〃	Koto-ku	〃	Koto-ku	November 30, 1974	1,146
		〃	Arakawa-ku	〃	Arakawa-ku	December 19, 1975	600
		〃	Adachi-ku	〃	Adachi-ku	〃	1,395
		〃	Katsushika-ku	〃	Katsushika-ku	〃	963
		〃	Edogawa-ku	〃	Edogawa-ku	〃	1,341
		Tokyo / Total					14,165
		Yokohama	Tsurumi Sea front areas		Yokohama	February 1, 1972	396
		Kawasaki	Kawasaki-ku, Saiwai-ku		Kawasaki	December 27, 1969	1,354
		〃				February 1, 1972	
		〃				November 30, 1974	
		Fuji	Midland areas		Fuji	February 1, 1972	364
		〃				January 13, 1977	
		Nagoya	South-central areas		Nagoya	February 1, 1973	1,939
		〃				December 19, 1975	
		〃				June 02, 1978	
		Thokai	North, Midland areas		Aichi (Pref.)	February 1, 1973	330
		Yokkaichi	Rinkai areas and all Kusu-cho areas		Yokkaichi	December 27, 1969	377
						November 30, 1974	
		Osaka	All area		Osaka	December 27, 1969	6,068
						November 30, 1974	
						December 19, 1975	
		Toyonaka	South areas		Toyonaka	February 1, 1973	172
		Suita	South areas		Suita	November 30, 1974	184
		Moriguchi	All area		Moriguchi	January 13, 1977	1,054
		Higashiosaka	West-central areas		Higashiosaka	June 02, 1978	1,163
		Yao	West-central areas		Yao	〃	652
		Sakai	West areas		Sakai	August 1, 1973	1,377
						January 13, 1977	
		Kobe	Sea front areas		Kobe	〃	640
		Amagasaki	East, South areas		Amagasaki	December 1, 1970	1,821
						November 30, 1974	
		Kurashiki	Mizushima areas		Kurashiki	December 19, 1975	1,096
		Tamano	Southern sea front areas		Okayama (Pref.)	〃	26
		Bizen	Around Katagamiwan areas			〃	33
		Kitakyushu	Dokaiwan areas		Kitakyushu	February 1, 1973	821
		Omuta	Midland areas		Omuta	August 1, 1973	700
		Total					34,973
Class II region / Specific disease	Minamata disease	Agano river	Downstream areas		Niigata (Pref.)	December 27, 1969	61
	〃		〃		Niigata	〃	99
	〃	Minamata bay	Coastal areas		Kagoshima (Pref.)	〃	114
	〃		〃		Kumamoto (Pref	〃	292
	Itai-itai disease	Jinzu river	Downstream areas		Toyama (Pref.)	〃	5
	Chronic arsenic	Shimane	Sasagatani areas		Shimane (Pref.)	July 4, 1974	3
	〃	Miyazaki	Toroku areas		Miyazaki (Pref.)	February 1, 1973	49
		Total					623
Total							35,596

Notes:
- The names of the former designated areas in this table are based on political sub-divisions at the time of designation.
- Kusu-cho was merged with Yokkaichi in February, 2005. Since 2004, the number of certified patients of Yokkaichi has included that of Kusu-cho.

Source: Compiled from an article by Ministry of the Environment

8.09 Changes in Existing number of Patients by Region, subject to the Pollution Damage Compensation Act (1)

Region	End of FY	1981	1982	1983	1984	1985	1986	1987	1988	1989	1990	1991	1992	1993	1994	1995	1996	1997
Class I Areas	Chiba	765	778	751	747	736	705	707	694	662	633	606	579	560	540	518	492	475
	Chiyoda-ku	234	257	266	287	293	313	309	313	296	288	267	250	239	231	220	214	206
	Chuo-ku	372	381	425	477	498	498	546	513	473	431	418	397	374	353	326	323	300
	Minato-ku	937	991	1,041	1,062	1,069	1,056	1,091	1,144	1,067	988	922	858	808	766	746	707	670
	Shinjuku	1,364	1,472	1,585	1,760	2,008	2,218	2,475	2,550	2,409	2,282	2,188	2,084	2,003	1,950	1,883	1,795	1,758
	Bunkyo-ku	1,021	1,078	1,116	1,158	1,220	1,214	1,278	1,323	1,231	1,152	1,096	1,037	968	920	871	821	780
	Taito-ku	818	876	950	995	1,046	1,105	1,151	1,112	1,048	988	943	891	860	820	782	733	704
	Shinagawa-ku	1,504	1,626	1,696	1,831	1,950	2,053	2,146	2,118	1,997	1,899	1,804	1,703	1,614	1,549	1,483	1,422	1,380
	Ota-ku	3,491	3,699	3,795	4,036	4,282	4,459	4,703	4,853	4,539	4,250	4,059	3,926	3,719	3,562	3,361	3,160	3,073
	Meguro-ku	1,105	1,143	1,227	1,263	1,307	1,338	1,423	1,414	1,317	1,212	1,126	1,048	970	929	869	806	773
	Shibuya-ku	944	1,028	1,095	1,201	1,314	1,451	1,572	1,520	1,412	1,329	1,258	1,176	1,102	1,043	973	904	854
	Toshima-ku	1,086	1,159	1,267	1,345	1,427	1,523	1,632	1,677	1,603	1,478	1,402	1,339	1,211	1,103	1,051	999	946
	Kita-ku	1,981	2,108	2,167	2,251	2,283	2,352	2,525	2,610	2,485	2,304	2,188	2,088	1,990	1,905	1,810	1,707	1,626
	Itabashi-ku	2,043	2,213	2,361	2,492	2,620	2,726	3,036	3,162	3,004	2,822	2,716	2,623	2,519	2,471	2,428	2,332	2,305
	Sumida-ku	884	1,011	1,114	1,225	1,301	1,406	1,620	1,583	1,512	1,411	1,333	1,238	1,155	1,085	1,053	999	961
	Koto-ku	2,004	2,199	2,384	2,589	2,828	2,985	3,368	3,490	3,250	2,968	2,813	2,652	2,499	2,412	2,306	2,165	2,089
	Arakawa	1,148	1,305	1,401	1,490	1,585	1,679	1,920	1,892	1,791	1,688	1,592	1,500	1,425	1,378	1,322	1,263	1,224
	Adachi-ku	4,231	4,511	4,770	4,926	5,099	5,294	5,589	5,393	4,893	4,403	4,170	3,926	3,586	3,412	3,251	3,071	2,892
	Katsushika-ku	1,815	1,978	2,136	2,298	2,468	2,562	2,787	2,850	2,691	2,467	2,338	2,219	2,076	1,967	1,841	1,701	1,649
	Edogawa-ku	2,211	2,429	2,688	2,994	3,301	3,677	4,086	4,085	3,836	3,591	3,438	3,261	3,006	2,865	2,696	2,533	2,449
	(Total of Tokyo)	29,193	31,464	33,484	35,680	37,899	39,909	43,257	43,602	40,854	37,951	36,071	34,216	32,124	30,721	29,272	27,655	26,639
	Yokohama	874	899	912	938	947	950	1,003	977	919	885	851	805	767	739	715	690	675
	Kawasaki	3,266	3,332	3,299	3,290	3,273	3,319	3,455	3,478	3,318	3,190	3,041	2,933	2,828	2,746	2,663	2,584	2,495
	Fuji	950	944	896	886	883	879	876	843	783	740	711	661	634	605	582	563	555
	Nagoya	4,718	4,867	4,927	5,055	5,157	5,285	5,747	5,852	5,525	5,229	4,974	4,699	4,407	4,207	4,009	3,763	3,627
	Toukai	788	816	809	849	884	900	1,067	1,048	991	936	903	853	804	768	739	696	669
	Yokkaichi	903	896	866	876	864	836	907	867	829	801	783	746	722	701	674	650	626
	Kusu-cho	101	95	89	89	88	85	90	90	87	84	83	81	73	71	67	63	62
	Osaka	19,015	18,719	18,682	18,743	18,769	19,064	19,639	19,973	18,890	17,912	16,885	16,011	15,125	14,318	13,651	12,965	12,342
	Toyonaka	547	548	547	570	587	570	601	577	545	524	505	469	446	420	395	369	348
	Suita	363	391	405	431	432	435	494	512	494	462	430	415	399	380	366	353	336
	Moriguchi	3,198	3,290	3,274	3,248	3,166	3,080	3,107	3,001	2,843	2,678	2,547	2,428	2,319	2,213	2,115	2,018	1,942
	Higashiosaka	2,078	2,425	2,635	2,916	3,190	3,569	3,696	3,887	3,563	3,359	3,186	3,036	2,940	2,697	2,601	2,409	2,290
	Yao	1,242	1,382	1,516	1,617	1,645	1,720	1,796	1,854	1,785	1,727	1,586	1,511	1,445	1,363	1,310	1,260	1,209
	Sakai	3,470	3,567	3,613	3,710	3,831	3,922	4,242	4,305	4,145	3,983	3,821	3,626	3,446	3,309	3,158	3,023	2,907
	Kobe	1,569	1,658	1,788	1,899	1,965	1,990	2,066	2,302	2,161	2,076	1,955	1,850	1,741	1,662	1,601	1,510	1,427
	Amagasaki	5,128	5,249	5,235	5,306	5,380	5,494	5,682	5,633	5,380	5,104	4,809	4,563	4,334	4,117	3,939	3,741	3,584
	Kurashiki	1,920	2,019	2,060	2,123	2,182	2,273	2,545	2,910	2,824	2,717	2,592	2,518	2,450	2,342	2,253	2,173	2,086
	Tamano	80	79	80	86	88	96	98	97	95	92	90	86	84	81	79	75	75
	Bizen	116	127	134	136	137	136	141	143	139	133	128	124	119	112	108	103	99
	Kitakyushu	1,681	1,712	1,736	1,814	1,867	1,954	2,108	2,124	2,032	1,932	1,868	1,777	1,678	1,615	1,541	1,487	1,431
	Omuta	1,226	1,298	1,315	1,339	1,421	1,523	1,703	2,438	2,394	2,314	2,166	2,065	2,006	1,915	1,839	1,772	1,703
	Total of Class I Areas	83,211	86,575	89,053	92,350	95,391	98,694	105,027	107,207	101,258	95,462	90,591	86,052	81,451	77,642	74,195	70,414	67,602
Class II Areas	Niigata (Pref.)	305	296	284	276	267	257	245	237	229	224	214	208	198	191	184	177	172
	Niigata	273	270	263	256	248	247	240	232	227	223	218	212	209	207	206	203	200
	Kumamoto (Pref.)	1,049	1,077	1,082	1,082	1,065	1,058	1,028	996	962	936	908	874	838	812	789	752	718
	Kagoshima (Pref.)	269	263	287	302	309	315	318	310	310	308	300	296	287	276	271	263	251
	(Sub-total)	1,896	1,926	1,916	1,916	1,889	1,877	1,831	1,775	1,728	1,691	1,640	1,590	1,532	1,486	1,450	1,395	1,341
	Shimane (Pref.)	11	10	9	9	8	7	7	7	6	6	6	6	6	6	6	6	6
	Miyazaki (Pref.)	110	107	103	101	99	96	94	86	84	79	78	79	73	75	77	74	75
	(Sub-total)	121	117	112	110	107	103	101	93	90	85	84	85	79	81	83	80	81
	Toyama (Pref.)	37	39	37	29	22	20	18	16	12	13	13	15	15	14	12	10	7
	Total of Class II Area	2,054	2,082	2,065	2,055	2,018	2,000	1,950	1,884	1,830	1,789	1,737	1,690	1,626	1,581	1,545	1,485	1,429
	Total	85,265	88,657	91,118	94,405	97,409	100,694	106,977	109,091	103,088	97,251	92,328	87,742	83,077	79,223	75,740	71,899	69,031

8.09 Changes in Existing number of Patients by Region, subject to the Pollution Damage Compensation Act (2)

Region	End of FY	1998	1999	2000	2001	2002	2003	2004	2005	2006	2007	2008	2009	2010	2011	2012	2013	2014	2015
Class I Areas	Chiba	457	441	429	407	390	380	368	359	346	333	326	316	303	280	271	257	246	241
	Chiyoda-ku	194	184	177	172	165	158	150	146	147	139	141	143	138	133	126	126	123	126
	Chuo-ku	286	284	276	274	263	259	252	251	244	240	229	225	227	214	209	204	200	192
	Minato-ku	621	584	559	534	510	485	470	445	421	410	405	388	373	362	351	341	334	333
	Shinjuku	1,708	1,652	1,615	1,513	1,399	1,330	1,278	1,222	1,181	1,135	1,098	1,065	1,056	1,009	971	942	908	868
	Bunkyo-ku	730	680	651	621	587	560	536	517	498	490	468	457	443	427	414	408	405	399
	Taito-ku	670	629	604	584	550	527	514	495	475	468	460	447	432	410	401	391	377	371
	Shinagawa-ku	1,327	1,302	1,166	1,126	1,102	1,063	1,038	988	948	910	882	849	833	804	779	753	729	706
	Ota-ku	2,988	2,903	2,868	2,822	2,748	2,699	2,232	2,123	2,064	1,998	1,941	1,889	1,784	1,714	1,654	1,609	1,557	1,524
	Meguro-ku	739	705	689	661	627	616	601	581	563	551	534	521	510	496	487	473	463	447
	Shibuya-ku	817	790	774	725	702	676	654	621	590	572	548	516	499	481	465	452	435	428
	Toshima-ku	909	856	817	793	773	751	736	707	697	682	664	650	638	639	626	589	565	518
	Kita-ku	1,533	1,442	1,409	1,355	1,268	1,227	1,191	1,148	1,122	1,098	1,077	1,062	1,047	1,028	1,014	862	838	815
	Itabashi-ku	2,260	2,219	2,013	1,925	1,863	1,828	1,797	1,770	1,733	1,699	1,664	1,617	1,581	1,561	1,534	1,493	1,479	1,450
	Sumida-ku	943	894	849	829	758	744	736	688	665	655	627	616	601	580	574	562	555	543
	Koto-ku	2,004	1,880	1,831	1,757	1,718	1,676	1,637	1,589	1,546	1,503	1,453	1,394	1,377	1,344	1,275	1,177	1,161	1,146
	Arakawa	1,158	1,075	1,015	983	942	927	910	881	838	820	760	727	697	671	643	626	616	600
	Adachi-ku	2,778	2,530	2,445	2,308	2,167	2,056	1,984	1,886	1,817	1,774	1,719	1,678	1,635	1,608	1,545	1,522	1,490	1,395
	Katsushika-ku	1,579	1,489	1,437	1,379	1,318	1,296	1,263	1,212	1,170	1,153	1,120	1,100	1,070	1,030	1,015	999	979	963
	Edogawa-ku	2,392	2,303	2,173	2,085	1,998	1,964	1,905	1,812	1,756	1,704	1,634	1,599	1,559	1,517	1,463	1,418	1,375	1,341
	(Total of Tokyo)	25,636	24,401	23,368	22,446	21,458	20,842	19,884	19,082	18,475	18,001	17,424	16,943	16,500	16,028	15,546	14,947	14,589	14,165
	Yokohama	657	647	633	610	591	579	553	534	522	517	503	487	464	440	426	416	405	396
	Kawasaki	2,397	2,304	2,245	2,179	2,091	2,036	1,984	1,913	1,831	1,786	1,739	1,700	1,604	1,549	1,503	1,455	1,396	1,354
	Fuji	551	539	530	518	514	510	485	473	463	459	450	445	434	425	416	407	373	364
	Nagoya	3,505	3,320	3,204	3,074	2,917	2,828	2,730	2,615	2,533	2,435	2,360	2,278	2,216	2,159	2,107	2,055	2,001	1,939
	Toukai	628	586	567	549	521	504	476	452	432	419	399	391	380	371	359	347	337	330
	Yokkaichi	589	574	553	532	515	501	523	513	499	488	476	462	450	433	422	411	394	377
	Kusu-cho	58	56	53	51	49	49	*	*	*	*	*	*	*	*	*	*	*	*
	Osaka	11,815	11,214	10,718	10,289	9,960	9,543	9,139	8,790	8,468	8,142	7,819	7,468	7,204	6,890	6,674	6,471	6,255	6,068
	Toyonaka	327	314	299	291	281	270	260	251	237	235	226	217	206	197	193	187	180	172
	Suita	325	310	297	287	274	264	255	250	243	235	230	225	219	209	205	199	191	184
	Moriguchi	1,848	1,754	1,687	1,641	1,581	1,493	1,454	1,398	1,360	1,335	1,293	1,261	1,223	1,206	1,177	1,146	1,114	1,054
	Higashiosaka	2,237	2,123	2,000	1,909	1,846	1,801	1,749	1,676	1,570	1,514	1,453	1,402	1,358	1,322	1,274	1,234	1,195	1,163
	Yao	1,176	1,139	1,103	1,073	1,035	1,015	981	938	913	887	856	814	776	756	721	704	680	652
	Sakai	2,813	2,727	2,583	2,452	2,339	2,250	2,170	2,100	2,021	1,968	1,911	1,835	1,765	1,703	1,655	1,509	1,438	1,377
	Kobe	1,390	1,331	1,273	1,250	1,207	1,186	1,145	1,095	1,024	959	916	863	830	786	758	681	656	640
	Amagasaki	3,428	3,258	3,119	3,015	2,876	2,764	2,674	2,570	2,456	2,357	2,298	2,221	2,157	2,108	2,022	1,944	1,880	1,821
	Kurashiki	2,014	1,956	1,894	1,829	1,773	1,721	1,675	1,614	1,548	1,490	1,449	1,392	1,340	1,293	1,240	1,190	1,148	1,096
	Tamano	66	65	64	63	59	54	50	47	45	44	41	39	36	33	32	30	28	26
	Bizen	97	92	88	80	75	71	70	66	62	60	55	52	51	49	46	43	36	33
	Kitakyushu	1,372	1,331	1,255	1,212	1,156	1,114	1,087	1,060	1,037	1,012	987	956	937	912	895	864	848	821
	Omuta	1,629	1,572	1,453	1,381	1,311	1,249	1,192	1,149	1,108	1,063	1,012	963	919	866	825	776	738	700
	Total of Class I Areas	65,015	62,054	59,415	57,138	54,819	53,024	50,904	48,945	47,193	45,739	44,223	42,732	41,372	40,015	38,767	37,273	36,128	34,973
Class II Areas	Niigata (Pref.)	162	156	145	139	129	122	114	109	101	97	92	85	82	74	75	73	67	61
	Niigata	196	195	189	186	175	169	159	149	145	138	132	129	125	119	112	110	105	99
	Kumamoto (Pref.)	678	645	616	595	570	549	521	502	468	448	426	410	382	357	334	315	305	292
	Kagoshima (Pref.)	240	234	221	215	204	198	192	186	181	172	168	163	150	144	132	126	117	114
	(Sub-total)	1,276	1,230	1,171	1,135	1,078	1,039	986	946	895	855	818	787	739	694	653	624	594	566
	Shimane (Pref.)	6	5	5	5	5	5	5	5	4	3	3	3	3	3	3	3	3	3
	Miyazaki (Pref.)	74	73	68	65	63	58	56	55	54	50	51	49	53	50	50	47	49	49
	(Sub-total)	80	78	73	70	68	63	61	60	58	53	54	52	56	53	53	50	52	52
	Toyama (Pref.)	9	6	5	4	4	4	3	2	4	5	5	5	5	4	4	3	5	5
	Total of Class II Area	1,365	1,314	1,249	1,209	1,150	1,106	1,050	1,008	957	913	877	844	800	751	710	677	651	623
合計		66,380	63,368	60,664	58,347	55,969	54,130	51,954	49,953	48,150	46,652	45,100	43,576	42,172	40,766	39,477	37,950	36,779	35,596

Notes:

・Kusu-cho was merged with Yokkaichi in February, 2005. Since 2004, the number of certified patients of Yokkaichi has included that of Kusu-cho.

Source: Article by Ministry of the Environment

8.10 ① Number of certified persons by Act on Compensation, etc. for pollution related health damage (Status of application process for Minamata disease certification)

(As of the end of April, 2017)

		Applied	Withdrawn	Processed		Unprocessed
				Certified	Rejected	
Kumamoto	Old legislation	3,312	92	1,500	1,720	0
	New legislation	18,575	6,743	289	10,444	1,099
	Total	21,887	6,835	1,789	12,164	1,099
Kagoshima	Old legislation	230	3	114	113	0
	New legislation	9,331	4,267	379	3,717	968
	Total	9,561	4,270	493	3,830	968
Niigata	Old legislation	644	10	335	299	0
	New legislation	844	155	39	550	100
	Total	1,488	165	374	849	100
City of Niigata	Old legislation	588	38	309	241	0
	New legislation	521	126	22	317	56
	Total	1,109	164	331	558	56
Total	Old legislation	4,774	143	2,258	2,373	0
	New legislation	29,271	11,291	729	15,028	2,223
	Total	34,045	11,434	2,987	17,401	2,223
Act on Temporary Measures		497	80	33	375	9

Source: Materials by Ministry of the Environment

8.10 ② Judgment on relief measures based on the Law Concerning Special Measures for Compensation of Minamata Disease

(Unit: Person)

	The number of applicants for lump-sum payment, etc.				Number of switched cases (*1)
	① Accepted (for lump-sum)	② Accepted (for cost of medical care)	③ Number of cases fall under neither ① nor ②	④ Total	
Kumamoto	19,306	3,510	5,144	27,960	14,797
Kagoshima	11,127	2,418	4,428	17,973	1,998
Nigata	1,816	143	120	2,079	29

Notes:
(*1) The number of people who switched to the Handbook of the Minamata Disease Victims (stipulated by the Law Concerning Special Measures for Compensation of Minamata Disease) from their National Health Insurance card that they possessed befroe the law was enforced.

Source: Materials by Ministry of the Environment

8.11 Acceptance and approval applications based on the Act on Asbestos Health Damage Relief

1. Acceptance of applications (As of the end of FY2015)

	Mesothelioma	Pulmonary	Asbestosis	Diffuse pleural thickening	Others	Total
Patients in case	6,792	2,098	197	184	199	9,470
Bereaved families of the deceased before enforcement	3,656	647	57	16	72	4,448
Bereaved families of the unclaimed deceased	890	311	41	34	26	1,302
Total	11,338	3,056	295	234	297	15,220

2. Approval (As of the end of FY2015)

	Mesothelioma	Pulmonary	Asbestosis	Diffuse pleural thickening	Total
Patients in case	5,374	1,148	22	68	6,612
Bereaved families of the deceased before enforcement	3,384	148	36	11	3,579
Bereaved families of the unclaimed deceased	611	172	2	9	794
Total	9,369	1,468	60	88	10,985

Source: "Acceptance and approval of applications based on the Act on Asbestos Health Damage Relief," by Environmental Restoration and Conservation Agency

8.12 Implementation Rate of Green Procurement in Local Governments and Enterprises

（Unit：%）

	Local Governments	Enterprises
FY 2002	38.7	56.0
2003	38.4	60.5
2004	41.5	57.4
2005	44.2	56.0
2006	76.1	60.8
2007	76.2	73.3
2008	76.0	73.6
2009	73.1	74.1
2010	73.8	71.9
2011	78.6	62.6
2012	81.3	66.1
2013	82.5	64.0
2014	69.0	60.9
2015	68.4	57.9

Notes:

・Regarding "Local Governments", rates are sourced from the "Survey of Green Purchasing of Local Public Entities" by Ministry of the Environment.
・Regarding "Local Governments", we have changed the question form of the questionnaire by items such as paper and stationery, etc. from fiscal year 2006 and considered it as being implemented if any one was applicable.
・The data relates to the ratio of local governments that are "systematically working" on green procurement. From FY2004, it has been deemed that green procurement is implemented in the case of initiatives based on policies, plans, etc., if targets and target items are described in them, and in the case of measures not based on policies, plans, etc., if green procurement is substantially promoted.
・Regarding "Enterprises", rates are sourced from the "Survey Results of Environmentally Friendly Corporate Behaviors" by Ministry of the Environment.
・From fiscal 2007 (biennial), the figures equal to the total percentage of "Create and select guidelines, etc.", "Selection by utilizing guidelines etc. created by industry groups" and "Taking environmental consideration into account, though not using guidelines etc."
・For "Enterprises", survey items have been changed since FY2012.

Source:

"Survey of green purchasing of local public entities," "Survey Results of Environmentally Friendly Corporate Behaviors," by Ministry of the Environment

8.13 Enforcement of performed environmental impact assessment under Environmental Impact Assessment Law

（Unit：Case）(As of the end of FY2015)

	Road	River	Railroad	Airport	Power plant	Disposal site	Land fill/ Reclamation	Surface improvement	Total
Procedures started	84	8	18	10	238	6	17	21	395
	(21)	(0)	(4)	(0)	(85)	(1)	(3)	(9)	(122)
In the process	11	0	2	0	131	1	3	2	149
	(0)	(0)	(1)	(0)	(41)	(0)	(0)	(0)	(42)
Procedures completed	63	7	14	9	78	5	12	14	197
	(20)	(0)	(3)	(0)	(29) 1)	(1)	(2) 1)	(7)	(61)
Procedures halted	10	1	2	1	29	0	2	5	49
	(1)	(0)	(0)	(0)	(15)	(0)	(1)	(2)	(19)
Comments from the Minister of the Environment	68	7	16	9	166	0	5	15	283
	(21)	(0)	(3)	(0)	(44)	(0)	(0)	(8)	(76)
Impact Statement	4	0	1	0	67	0	1	1	74
	(0) 3)	(0)	(0)	(0)	(0)	(0)	(0)	(0)	(0)
Scoping 1)	-	-	-	-	-	-	-	-	-
Evaluation 2)	64	7	15	9	99	0	4	14	209
	(21)	(0)	(3)	(0)	(44) 2)	(0)	(0)	(8)	(76)
Report	0	0	0	0	0	0	0	0	0
	(0)	(0)	(0)	(0)	(0)	(0)	(0)	(0)	(0)

Notes:

・Parenthesized figures refer to businesses that have changed procedures to procedures based on the law in the middle of the process."

・When two business projects were merged, they were counted as one.

1: Including 7 business projects (that are determined as assessment procedures unnecessary as a result of the screening) that the notifications based on Article 4, Paragraph 3, Item 2 of The Environmental Impact Assessment Law have been completed.

2:There are 12 other business projects to which Ministry of the Environment submit comments, based on Environmental Assessment Enforcement Outline in regard to Wind Energy project (Agency for Natural Resources and Energy, Ministry of Economy, Trade and Industry, June 6th, 2012).

3: Including 1 project on which comments by the Minister of the Environment was submitted (a transitory measure).

Source: Materials by Ministry of the Environment

8.14 The number of cases that completed environmental impact assessment procedures under Environmental Impact Assessment Law (as of the end of FY2014)

(Unit: case) (As of the end of FY2015)

	Project type																	
	Road		River		Railroad		Airport		Power plant		Disposal site		Land fill/Reclamation		Surface improvement		Total	
	Completed	Suspended	Completed	Suspended	Completed	Suspended	Completed	Suspended	Completed	Suspended	Completed	Suspended	Completed	Suspended	Completed	Suspended	Completed	Suspended
FY 1999	8(8)	-	-	-	1(1)	-	-	-	3(3)	-	1(1)*	-	1(1)*	-	1(1)	-	14(14)*	-
2000	8(7)	-	-	-	1(1)	-	1(0)*	-	10(8)	-	-	-	2(1)*	-	6(6)	1(1)	27(23)*	1(1)
2001	5(5)	-	-	-	6(1)	-	1(0)	-	3(1)	-	-	-	1(0)	-	1(0)	-	17(7)	-
2002	1(0)	-	1(0)	1(0)	-	-	1(0)	-	2(0)	2(0)	1(0)	-	-	-	-	-	6(0)	3(0)
2003	-	2(0)	-	-	-	-	-	-	2(0)	-	-	-	-	-	4(0)	-	6(0)	2(0)
2004	7(0)	4(0)	1(0)	-	-	-	1(0)	-	1(0)	-	-	-	-	-	-	-	10(0)	4(0)
2005	6(0)	1(1)	1(0)	-	2(0)	-	2(0)	-	2(0)	-	1(0)*	-	1(0)*	-	-	1(0)	14(0)*	2(1)
2006	5(0)	2(0)	-	-	-	2(0)	1(0)*	-	6(0)	1(0)	-	-	2(0)*	-	-	1(0)	13(0)*	6(0)
2007	5(0)	-	1(0)	-	-	-	-	1(0)*	2(0)	-	1(0)	-	1(0)	1(0)*	2(0)	-	12(0)	1(0)*
2008	5(0)	-	1(0)	-	-	-	-	-	-	-	-	-	-	-	-	-	6(0)	-
2009	2(0)	-	-	-	-	-	-	-	5(0)	1(0)	-	-	-	-	-	-	7(0)	1(0)
2010	2(0)	-	-	-	-	-	-	-	3(0)	1(0)	-	-	-	-	-	1(1)	5(0)	2(1)
2011	2(0)	-	-	-	-	-	-	-	2(0)		-	-	1(0)	1(1)	-	-	5(0)	1(1)
2012	-	-	1(0)	-	2(0)	-	-	-	9(4)	1(0)	-	-	1(0)	-	-	-	13(4)	1(0)
2013	3(0)	-	-	-	-	-	1(0)	-	5(0)	9(6)	-	-	2(0)	-	-	1(0)	10(0)	10(6)
2014	3(0)	-	1(0)	-	1(0)	-	-	-	10(4)	8(8)	1(0)	-	-	-	-	-	16(4)	8(8)
2015	1(0)	1(0)	-	-	1(0)	-	1(0)	-	13(9)	6(1)	-	-	-	-	-	-	16(9)	7(1)
Total	63(20)	10(1)	7(0)	1(0)	14(3)	2(0)	9(0)*	1(0)*	78(29)	29(15)	5(1)*	0(0)	12(2)*	2(1)*	14(7)	5(2)	197(61)*	49(19)*

Notes:

・Parenthesized figures refer to businesses that have changed the procedures to procedures based on the law in the middle of the procedures, and included in "Total."

・Figures with * indicate that two business projects merged were included, but they are counted as one.

Source: Materials by Ministry of the Environment

8.15 Status of formulating basic ordinances of Environmental Policy

By Basic Property （Unit：%）

Status of formulating basic ordinances of Environmental Policy	Nationwide	Prefecture	Ordinance-designated city	Municipality
	(n=1023)	(n=41)	(n=17)	(n=965)
Dealt with/Completed	74.6	97.8	100.0	73.1
Work in progress	0.3	0.0	0.0	0.3
Under consideration	3.9	0.0	0.0	4.2
No plan at the moment	21.1	2.2	0.0	22.4
No response	0.0	0.0	0.0	0.0

By Population Size （Unit：%）

Status of formulating basic articles of Environmental Policy	Less than 10 thousand	10 thousand or more ～ less than 100 thousand	100 thousand or more～ less than 300 thousand	300 thousand or more ～ less than 500 thousand	500 thousand or more
	(n=163)	(n=611)	(n=168)	(n=44)	(n=78)
Completed	41.1	73.6	95.8	93.2	96.2
Work in progress	0.0	0.5	0.0	0.0	0.0
Under consideration	9.8	4.3	0.0	0.0	0.0
No plan at the moment	49.1	21.6	4.2	6.8	3.8
No response	0.0	0.0	0.0	0.0	0.0

Note:Since the response percentage of each item is rounded off to the second decimal place, the total of the response percentages may not be 100% in some cases.

Source: Materials of "Survey questionnaire for local governments in regard to the Basic Environmental Plan 2016" by Ministry of the Environment

8.16 Status of formulating basic plans of Environmental Policies

By Basic Property （Unit：%）

Status of formulating basic plans of Environmental Policy	National	Prefecture	Ordinance-designated city	Municipality
	(n=1,064)	(n=45)	(n=18)	(n=1,001)
Completed	74.7	100.0	100.0	73.1
Work in progress	1.2	0.0	0.0	1.3
Under consideration	5.3	0.0	0.0	5.6
No plan at the moment	18.8	0.0	0.0	20.0
No response	0.0	0.0	0.0	0.0

By Population size （Unit：%）

Status of formulating basic plans of Environmental Policy	Less than 10 thousand	10 thousand or more ～ less than 100 thousand	100 thousand or more ～ less than 300 thousand	300 thousand or more ～ less than 500 thousand	500 thousand or more
	(n=163)	(n=611)	(n=168)	(n=44)	(n=78)
Completed	36.8	73.3	98.8	100.0	98.7
Work in progress	1.8	1.6	0.0	0.0	0.0
Under consideration	11.7	6.1	0.0	0.0	0.0
No plan at the moment	49.7	19.0	1.2	0.0	1.3
No response	0.0	0.0	0.0	0.0	0.0

Source: Materials of "Survey questionnaire for local governments in regard to the Basic Environmental Plan 2016," Ministry of the Environment

8.17 Status of environmental policies local governments are focusing on

（Unit：%）

Item	Total (n＝3,628) Environmental Policies that are currently emphasized and carried out (multiple answers allowed)
a. Conservation of global environment	28.1
b. Initiatives regarding to conservation and sustainable use of biodiversity	14.7
c. Initiatives to ensure circulation of material and a creation of a sound material-cycle society	23.1
d. Initiatives regarding to conservation of aquatic, soil and ground environment	9.7
e. Initiatives regarding to conservation of the atmospheric environment	4.7
f. Initiatives to establish and promote comprehensive hazardous chemical control	0.2
g. Promoting green economy and society	1.8
h. Enrichment of developing technologies, R&D, Monitoring and observing, etc.	0.7
i. Policies on International initiatives	0.1
h. Promoting development of local communities and human resources	11.7
k. Improvement of and providing environmental information and enrichment of publicity	1.1
i. Evaluation of environmental impacts, etc.	0.2
m. Measures for environmental health, settlement of environmental pollution disputes, and against environmental crimes	2.2
Others	1.7
No response	0.0

Source: Materials of "Survey questionnaire for local governments in regard to the Basic Environmental plan 2016," Ministry of the Environment

8.18 Business confidence in Environmental business in Japan

（DI："Good"-"Bad", %point）

	Present	6 months from now	10 years from now
Average	22	23	42
Previous survey	(20)	(19)	(37)
Big enterprise	27	27	51
Medium-sized enterprise	23	24	44
Small- and medium-sized enterprise	19	17	31
Manufacturing	22	24	45
Non-manufacturing	22	21	39

Source: "Economic Survey of Environmental Industries in December 2016," Ministry of the Environment

8.19 Top 5 Environmental business that are expected to grow (total of all enterprise scale)

Present （Percentage in total %）

1	Energy-saving vehicles	27.2
2	Air pollution prevention equipment/facility	16.6
3	Waste water treatment equipment and facility	11.1
4	Solar generation system (manufacturing of related equipment)	9.2
5	Renewable energy Note)	7.4

Note:
Renewable energy refers to new energy sources such as Wind power, hydrogeneration, hydroelectric power generation, geothermal power generation, solar thermal application, biomass power system, medium and small hydroelectric generation, etc. and equipment manufacturing and sales business of thereof.

6 months from now （Percentage in total %）

1	Energy-saving vehicles	28.9
2	Renewable energy ※）	13.6
3	Air pollution prevention equipment/facility	9.7
4	Solar generation system (manufacturing of related equipment)	5.1
5	Waste water treatment equipment and facility	4.9

10 years from now （Percentage in total %）

1	Renewable energy	25.7
2	Energy-saving vehicles	16.3
3	Air pollution prevention equipment/facility	6.6
4	Other businesses for counter-measures against global warming	6.1
5	Battery	6.0

Source: "Economic Survey of Environmental Industries in December 2016" by Ministry of the Environment

8.20 Business outlook (Diffusion Index)

（DI：Good-Bad、% Point）

								Forecast	
	2015	2016				2017		～10 years from now
	Dec.	Mar.	Jun.	Sep.	Dec.	Mar.	Jun.	
Environmental Business	21		16		20		20	22
Forecast made 6 months ago	(23)		(22)		(18)			(22)
A Environmental pollution control	15		9		16		18	15
B Prevention of global warming	28		25		26		26	29
C Waste disposal/Effective Utilization of Resources	12		6		11		11	9
D Natural Conservation	1		-9		14		22	36
All business	15		11		15		14	7
Forecast made 6 months ago	(15)		(15)		(10)			(6)
Of which carries out environmental business	22		18		21		22	15
Of which carries out NO environmental business	13		10		13		13	5
"BOJ's Tankan Survey" (The Bank of Japan's Short-Term Economic Survey of Enterprises in Japan including all scales of business and all industries)	9	7	4	5	7	2		

Notes:
- 1,505 valid responses were returned from Environmental business entities and 4,712 responses from all business as of December 2016.
- Figure of March 2016 in "BOJ's Tankan Survey" is Index of Leading Economic Indicators.

Source: "Economic Survey of Environmental Industries in December 2016," Ministry of the Environment

8.21 Environmental business outlook (by type of environmental business)

(DI: Good－Bad、%Point)

	Total of all scales and sizes					
	Present		6 months from now		10 years from now	
	Valid response	DI	Valid response	DI	Valid response	DI
Environmental business total	1,505	20	1,498	20	1,465	22
Previous survey	1,498	16	1,494	18	1,472	22
A. Environmental pollution control	326	16	325	18	313	15
Previous survey	341	9	341	11	337	22
B. Prevention of global warming	826	26	825	26	806	29
Previous survey	787	25	783	24	770	27
C. Waste disposal/Effective utilization of resources	311	11	306	11	304	9
Previous survey	337	6	337	10	333	9
D. Conservation of natural environment	42	14	42	22	42	36
Previous survey	33	-9	33	-3	32	18
A-1 Air pollution prevention equipment/facility	39	13	39	13	38	23
A-2 Waste water treatment equipment/facility	71	15	71	17	67	14
A-3 Soil and water purifier/facility (including underground water clean-up)	18	44	17	47	16	44
A-4 Noise, vibration prevention equipment/facility	4	-	4	-	3	-
A-5 Environmental analysis, measurement, monitoring equipment	13	23	13	23	13	38
A-6 Other environmental pollution control products/equipment/facility	47	2	47	3	46	8
A-7 Waste water treatment service	34	26	34	26	33	6
A-8 Soil and water purification service (including underground water purification)	30	7	30	10	29	-7
A-9 Environmental analysis, measurement, monitoring, assessment	21	19	21	14	21	15
A-10 Research and development on environment/engineering	10	30	10	40	9	-
A-11 Environmental education, environmental finance and consulting	21	9	21	9	21	33
A-12 Other environmental pollution control service	18	28	18	39	17	12
B-1 Renewable energy	244	48	244	47	240	40
B-2 Photovoltaic (PV) power system (production of related machinery)	66	1	66	-3	65	-18
B-3 Photovoltaic (PV) power system (installation/maintenance)	97	12	97	0	94	-22
B-4 Smart grid	5	-	5	-	5	-
B-5 Energy-saving vehicle	61	23	60	28	57	44
B-6 Energy-saving home appliance	50	22	50	30	50	30
B-7 High-efficiency hot water heater	99	30	99	31	97	38
B-8 Consultancy in the field of energy-saving	43	19	43	16	41	30
B-9 Storage battery	35	-3	35	9	33	55
B-10 Energy saving housing construction	49	29	49	35	48	63
B-11 Other business related to global warming countermeasures	77	10	77	10	76	40
C-1 Waste disposal equipment/facility	31	13	30	14	30	-16
C-2 Household waste disposal	38	16	38	10	38	0
C-3 Industrial waste disposal	82	16	82	15	80	0
C-4 Renovation/repairing	30	34	30	37	30	37
C-5 Lease/rental	15	7	15	0	15	7
C-6 Secondhand goods	12	16	11	0	11	-9
C-7 Recycled material	85	-3	82	1	82	19
C-8 Other resource use	18	-5	18	11	18	27
D-1 Water resource use	5	-	5	-	5	-
D-2 Sustainable agricultural forestry industries and fisheries/tree planting	24	13	24	25	24	46
D-3 Other conservation of natural environment	13	23	13	23	13	16

Source: "Economic Survey of Environmental Industries in December 2016," Ministry of the Environment

8.22 Initiatives toward environmental management (Listed companies)

		2005	2006	2007	2008	2009	2010	2011	2012	2013	2014	2015
Formulate management policies related to environment	(%)	82.9	86.5	83.6	83.9	85.6	87.1	-	-	-	-	-
Set up specific goals	(%)	82.6	87.3	84.7	84.7	86.9	93.2	89.8	91.7	92.8	84.0	74.0
Formulate specific action plans	(%)	80.0	-	-	-	-	-	-	-	-	-	-
Number of valid responses	(case)	1,213	1,138	1,151	1,227	1,142	1,034	949	374	483	425	539

Note:
・Since FY2011, "Formulate management policies related to environment" question is no longer on the questionnaire.
・Since FY2011, rates of the number of entities that grasp the data of environmental load in their business area were used.

Source: "Survey on Environmentally Friendly Activities of Businesses," Ministry of the Environment

8.23 Companies that disclose environmental information

（Unit：Case）

	FY1999	2000	2001	2002	2003	2004	2005	2006	2008	2010	2011	2012	2013	2014	2015
States in securities reports	105	134	136	171	166	277	375	359	168	120	266	—	144	—	155
States in some parts of annual reports	—	—	—	—	—	—	—	—	324	224	—	—	—	—	—
States in IR materials (Annual reports, etc.)	—	—	—	—	—	—	—	—	—	—	337	—	228	—	268
States in website	335	607	848	1,084	1,176	977	1,180	1,317	1,329	1,254	1,320	—	768	—	794
Disclose in brochure	360	365	293	275	248	228	216	293	258	210	864	—	477	—	338
Publish environmental reports	270	430	515	633	714	801	933	1,049	1,160	1,068	1,015	514	593	551	680
Hold a meeting for local residents	—	—	161	174	197	264	288	303	310	259	—	—	—	—	—
Hold a meeting for stakeholders	—	—	—	—	—	—	—	—	—	—	244	—	157	—	119
Valid response	886	1,036	1,351	1,564	1,571	1,399	1,585	1,671	1,701	1,672	1,620	—	900	—	978

Notes:
- Data refers to total numbers. Since multiple answers are allowed, valid response and total numbers do not much.
- Starting in FY 2008, a choice of "States in some parts of annual reports" was included in the survey.
- Starting in FY 2009, the survey is conducted biennially.
- Starting in FY 2011, the survey is conducted every year since the questionnaire was incorporated into White paper.
- Starting in FY 2011, a choice of "State in some parts of annual reports" was simplified to "State in IR materials (IR reports, etc.).
- Starting in FY 2011, "Hold a meeting to report to the residents" was merged into "Hold a meeting to explain to stakeholders."
- Only "Published environmental reports" question was asked in FY 2012 in another survey. (added up the number of entities that made environmental report(s) and the number of entities that made a part of CSR report(s). and so forth).
- In FY2013, "Publish environmental reports" shows the number that is added up the number of entities that made environmental report(s) and the number of entities that made CSR report(s) showing environmental data.

"securities reports" = "securities report(s)" + "business report bound by the Companies Act," "brochure" = "production catalogue(s)" + "business prospectus(es)"
- In 2014, "Publish environmental reports" only. Survey was conducted with other questions.

Source: "Survey on Environmentally Friendly Activities of Businesses," Ministry of the Environment

8.24 Status of compiling and disclosing of environmental reports

	FY2005	2006	2007	2008	2009	2010	2011	2012	2013	2014	2015
Compile and disclose environmental reports	933	1,049	1,011	1,160	1,091	1,068	1,015	514	593	551	680
Plan to compile and disclose environment reports next Fiscal Year	99	98	97	71	63	54	—	20	-	-	-
Compile but do not disclose	—	—	—	—	—	—	54	—	36	23	52
To be discussed	—	—	—	—	—	—	98	—	43	24	36
Not compiling	547	488	518	458	598	549	451	157	227	135	198
No response	6	9	5	12	8	1	2	0	1	1	12
Valid responses	1,585	1,644	1,631	1,701	1,760	1,672	1,620	691	900	734	978

Notes:
- Valid responses refer to the number of companies that disclose environmental information.
- "Compile and disclose" refer to publishing ed as parts of CSR reports and Sustainability reports.
- Starting in FY2011, "Plan to compile and disclose next Fiscal Year" was divided into "Compile but not disclose" and "To be discussed", but they were deleted from the Survey in FY 2012.

Source: "Survey on Environmentally Friendly Activities of Businesses" by Ministry of the Environment

8.25 Conditions of introduction of environmental accounting

（Unit：Case）

	FY2001	2002	2003	2004	2005	2006	2007	2008	2009	2010	2011	2012	2013	2014	2015
Already introduced	491	573	661	712	790	819	761	805	771	730	652	304	395	301	504
Under discussion to be introduced	580	461	387	440	369	363	345	290	277	206	275	73	95	—	—
No plan to be introduced	1,451	1,521	1,433	1,144	1,270	1,336	1,437	1,584	1,679	1,666	1,484	627	811	832	1,098
Unaware of the term "Environmental accounting"	248	246	162	209	235	231	258	323	297	312	376	157	179	178	283
No response	16	25	38	19	27	25	18	26	12	9	7	0	16	89	18
Not interested in Environmental accounting	64	76	58												
Others	48	65	56												
Valid responses	2,898	2,967	2,795	2,524	2,691	2,774	2,819	3,028	3,036	2,923	2,794	1,161	1,496	1,400	1,903

Notes:
・Starting in FY 2004, survey methods were changed and ※questions were deleted.
・Starting in FY 2014, "Under discussion to be introduced" was deleted. Also, figures for "No plan to be introduced" are substituted by the ones for "Not yet introduced."

Source: "Survey on Environmentally Friendly Activities of Businesses," Ministry of the Environment

8.26 Changes in results of National examinations for Pollution Control Manager and Others

	# of Applicants	# of Examinees	The ratio of applicants to the number of examinees (%)	# of successful applicants	Examination pass rate(%)	Total number of successful applicants between FY 1971 and FY 2016	
FY 1971	115,951	95,197	82.1	36,385	38.2	Air Pollution Control Manager First grade	71,356
1972	139,558	108,487	77.7	35,667	32.9	Air Pollution Control Manage Second grade	5,196
1973	119,700	90,138	75.3	29,946	33.2	Air Pollution Control Manager Third grade	8,287
1974	116,917	86,973	74.4	21,443	24.7	Air Pollution Control Manager Fourth grade	8,604
1975	96,223	71,741	74.6	15,710	21.9		
1976	76,345	55,550	72.8	10,698	19.3	Subtotal	93,443
1977	68,680	50,153	73.0	13,308	26.5		
1978	54,731	39,320	71.8	8,402	21.4	Water Pollution Control Manager First grade	116,961
1979	43,108	30,095	69.8	6,572	21.8	Water Pollution Control Manager Second grade	21,506
1980	38,301	27,542	71.9	5,322	19.3	Water Pollution Control Manager Third grade	11,146
1981	33,853	24,205	71.5	5,460	22.6	Water Pollution Control Manager Fourth grade	24,802
1982	30,780	21,790	70.8	5,137	23.6		
1983	26,764	18,834	70.4	3,328	17.7	Subtotal	174,415
1984	23,070	17,385	75.4	3,508	20.2		
1985	21,542	16,330	75.8	3,322	20.3	Noise and Vibration Abatement Manager	4,394
1986	20,441	15,848	77.5	3,010	19.0	* Noise Abatement Manager	46,403
1987	17,727	14,173	80.0	3,413	24.1	* Vibration Abatement Manager	13,696
1988	17,881	14,253	79.7	2,885	20.2	Specific Dust Pollution Control Manager	804
1989	18,853	15,233	80.8	4,071	26.7	General Dust Pollution Control Manager	5,799
1990	20,545	16,382	79.7	3,480	21.2	Dioxins Pollution Control Manager	13,108
1991	22,741	18,352	80.7	4,283	23.3	Chief Manager of Pollution Control	12,530
1992	24,141	19,803	82.0	3,868	19.5		
1993	25,342	20,866	82.3	4,589	22.0		
1994	25,681	21,161	82.4	5,250	24.8		
1995	25,950	21,475	82.8	4,221	19.7		
1996	26,101	21,336	81.7	3,119	14.6		
1997	26,405	21,619	81.9	4,336	20.1		
1998	27,419	22,555	82.3	4,858	21.5		
1999	28,176	23,009	81.7	5,107	22.2		
2000	34,853	28,737	82.5	8,307	28.9		
2001	31,257	25,613	81.9	6,055	23.6		
2002	30,379	24,684	81.3	6,005	24.3		
2003	31,003	25,174	81.2	5,417	21.5		
2004	28,553	23,201	81.3	5,805	25.0	Total	364,592
2005	29,489	24,016	81.4	7,376	30.7		
2006	25,899	21,351	82.4	5,134	24.0		
2007	29,504	25,237	85.5	3,132	12.4		
2008	33,945	29,564	87.1	6,127	20.7		
2009	33,649	29,437	87.5	6,446	21.9		
2010	33,516	29,456	87.9	6,691	22.7		
2011	31,952	28,045	87.8	6,220	22.2		
2012	30,952	27,248	88.0	6,364	23.4		
2013	31,319	27,328	87.3	5,407	19.8		
2014	29,862	25,989	87.0	6,501	25.0		
2015	29,129	25,562	87.8	6,525	25.5		
2016	28,178	24,690	87.6	6,382	25.8		

Notes:

- * Refers to the accumulated subtotal of successful applicants up to FY2005. After FY 2006, they were merged into Noise and Vibration Abatement Manager.
- Since FY2006, "System to pass by each subject" was introduced.

Source: "Result of National Exam for Pollution Control Managers (each FY)," Ministry of Economy, Trade and Industry, as well as Ministry of the Environment

8.27 Number of Environmental NGOs and the like

●Number of organizations by prefecture

Prefecture	# of organizations	Ratio(%)
Hokkaido	327	7.47%
Aomori	49	1.12%
Iwate	69	1.58%
Miyagi	97	2.22%
Akita	54	1.23%
Yamagata	47	1.07%
Fukushima	95	2.17%
Ibaraki	68	1.55%
Tochigi	51	1.16%
Gunma	62	1.42%
Saitama	106	2.42%
Chiba	129	2.95%
Tokyo	504	11.51%
Kanagawa	178	4.07%
Niigata	84	1.92%
Toyama	62	1.42%
Ishikawa	53	1.21%
Fukui	41	0.94%
Yamanashi	45	1.03%
Nagano	112	2.56%
Gifu	82	1.87%
Shizuoka	137	3.13%
Aichi	185	4.23%
Mie	88	2.01%
Shiga	66	1.51%
Kyoto	111	2.54%
Osaka	203	4.64%
Hyogo	149	3.40%
Nara	49	1.12%
Wakayama	46	1.05%
Tottori	37	0.85%
Shimane	62	1.42%
Okayama	64	1.46%
Hiroshima	97	2.22%
Yamaguchi	48	1.10%
Tokushima	52	1.19%
Kagawa	49	1.12%
Ehime	59	1.35%
Kochi	58	1.32%
Fukuoka	126	2.88%
Saga	30	0.69%
Nagasaki	38	0.87%
Kumamoto	66	1.51%
Oita	44	1.01%
Miyazaki	47	1.07%
Kagoshima	59	1.35%
Okinawa	40	0.91%
No response	53	1.21%
Nationwide total	4,378	100,00

●Corporate status

Kind of corporate status	# of organizations	Ratio(%)
Specified Nonprofit organization (NPO)	2,687	61.38%
Foundation	209	4.77%
Incorporated association	160	3.65%
Others	11	0.25%
None (non-statutory body)	730	16.67%
No response	581	13.27%
Total	4,378	100.00

●Fields of activity （Multiple answers allowed）

Field of activities	# of organizations	Ratio(%)
Forest conservation, Tree planting	1,614	36.87%
Prevention of desertification	110	2.51%
Recycling and waste management	970	22.16%
Prevention of global warming	1,081	24.69%
Conservation of fauna, flora and biodiversity	1,494	34.13%
Measures for alien species	495	11.31%
Toxic chemicals control	227	5.19%
Protection of air quality	391	8.93%
Noise, Vibration, and Odor control	151	3.45%
Conservation of water and ground environment	1,096	25.03%
Environmental education	2,374	54.23%
Community development and revitalization	2,497	57.04%
Environmentally-friendly consumption and life	781	17.84%
Cleanup operation	1,248	28.51%
Others	773	17.66%

●Budget range

Budget range of organization	# of organizations	Ratio(%)
0 ~ less than 1 million yen	1,705	38.94%
1 million yen or more, and less than 10 million yen	1,452	33.17%
10 million yen or more, and less than 100 million yen	840	19.19%
100 million yen or more	241	5.50%
No response	140	3.20%
Total	4,378	100.00

●Number of staff

<Total staff number>

Total staff number （regardless of being paid or not paid）	Number of organizations	Ratio (%)
0	138	3.15%
5 or less	665	15.19%
6 ～10	370	8.45%
11 ～ 20	333	7.61%
21 ～ 50	199	4.55%
51 or more	81	1.85%
No response	2,592	59.21%
Total	4,378	100.00

Notes:

・Survey was conducted among 22,613 organizations in FY2015, and 4,378 organizations with valid responses were compiled.

・Ratio refers to the ratio to the total number of organizations with valid responses (4,378 organizations).

・In FY2015, a survey on the membership numbers (individual and corporate members) was not conducted.

Source: Compiled from "Overview of Environmental NGO and NPO online data base FY2015," Environmental Restoration and Conservation Agency

8.28 Funding from Japan Fund for Global Environment

	Adopted (Number)	Grants (Million yen)
FY2004	203	715
2005	202	704
2006	170	579
2007	174	593
2008	205	679
2009	168	513
2010	153	458
2011	179	514
2012	190	600
2013	189	578
2014	197	605
2015	206	599
2016	220	619
2017	221	641

Note: Grants for FY 2017 refer to the determined amounts to be granted.

Source: Materials from Japan Fund Global Environment by Environmental Restoration and Conservation Agency (incorporated administrative agency)